500-ME-12363 VOL. 2

AYDIN COMPUTER AND MONITOR Division
700 DRESHER ROAD • HORSHAM, PA 19044 U.S.A.
PHONE: (215) 657-8600 • TELEX: 6851211 AYDIN UW • FAX: (215) 657-5470

OPERATION AND MAINTENANCE MANUAL

FOR

PCM BIT SYNCHRONIZER

MODEL 335A

P/N 356-0181-[ ]

298-0779
Volume II

September 1992

The information disclosed in this document is proprietary to Aydin. It shall not be disclosed to third parties, and shall not be duplicated, used or disclosed in whole or in part for any purpose other than to evaluate the document. If a contract is awarded to Aydin as a result of or in connection with the submission of this data, the customer would be given mutually agreed rights in data. This restriction does not limit the right to use information contained in the data if it is obtained from another source without restriction. The data subject to the restriction is the text and drawings of this document.

Digitized by the Internet Archive
in 2025

https://archive.org/details/manualsplus_06842

500-ME-12363 VOL. 2

AYDIN COMPUTER AND MONITOR Division
700 DRESHER ROAD • HORSHAM, PA 19044 U.S.A.
PHONE: (215) 657-8600 • TELEX: 6851211 AYDIN UW • FAX: (215) 657-5470

OPERATION AND MAINTENANCE MANUAL

FOR

PCM BIT SYNCHRONIZER

MODEL 335A

P/N 356-0181-[ ]

298-0779
Volume II

September 1992

The information disclosed in this document is proprietary to Aydin. It shall not be disclosed to third parties, and shall not be duplicated, used or disclosed in whole or in part for any purpose other than to evaluate the document. If a contract is awarded to Aydin as a result of or in connection with the submission of this data, the customer would be given mutually agreed rights in data. This restriction does not limit the right to use information contained in the data if it is obtained from another source without restriction. The data subject to the restriction is the text and drawings of this document.

LIST OF EFFECTIVE PAGES

Title.....September 1992
A.....September 1992
356-0181-500 thru -504,
-507 thru -538, and -540.....September 1992
355-0181-501.....September 1992
354-0181-501 and -502.....September 1992
460-0906-501.....September 1992
460-0921-501.....September 1992
460-0927-501.....September 1992
460-1058-501.....September 1992
460-1095-501.....September 1992
600-0335-1.....September 1992
460-1823-501.....September 1992
600-0311.....September 1992
460-1982-502.....September 1992
600-0397-502.....September 1992
460-1985-501.....September 1992
600-0400.....September 1992
460-2051-501.....September 1992
600-0461.....September 1992
460-2058-501.....September 1992
600-0468.....September 1992
460-2092-502.....September 1992
600-0495-502.....September 1992
460-2134-501.....September 1992
600-0502.....September 1992
460-2140-501.....September 1992
600-0536.....September 1992
460-2141-501.....September 1992
600-0537.....September 1992
460-2142-501.....September 1992
600-0538.....September 1992
460-2143-501.....September 1992
600-0539.....September 1992
470-0051-517.....September 1992
460-2269-501.....September 1992
600-0619.....September 1992
730-2422.....September 1992
730-2461.....September 1992
760-0342.....September 1992

WP800-0239

Section 6

PARTS LISTS AND DRAWINGS

6.1 GENERAL

This section contains the parts lists and assembly drawings for the Model 335A. Table 6-1 is a list of the assembly drawings, schematics, parts lists, accessory list and wiring diagrams along with their associated reference numbers.

Table 6-1. Parts Lists and Drawings

TITLE	NUMBER
PCM Bit Synchronizer Top Assembly Model 335A	356-0181-500 through -504, -507 through -538, and -540
PCM Bit Synchronizer Chassis Assembly Model 335A	355-0181-501
List of Accessories Model 335A	354-0181-501 and -502
PC Card Type THD001-1, Parts List, Assembly Drawing and Schematic	460-0906-501
PC Card Type SLC029-1, Parts List, Assembly Drawing and Schematic	460-0921-501
PC Card Type SLC030-1, Parts List, Assembly Drawing and Schematic	460-0927-501
PC Card Type PDT020-1, Parts List, Assembly Drawing and Schematic	460-1058-501
PC Card Type CSD002-1, Parts List, Assembly Drawing and Schematic	460-1095-501 600-0335-1
PC Card Type ACL009-1, Parts List, Assembly Drawing and Schematic	460-1823-501 600-0311
PC Card Type BSD001-2, Parts List, Assembly Drawing and Schematic	460-1982-502 600-0397-502
PC Card Type LDR050-1, Parts List, Assembly Drawing and Schematic	460-1985-501 600-0400
PC Card Type INP067-1, Parts List, Assembly Drawing and Schematic	460-2051-501 600-0461
PC Card Type LDR053-1, Parts List, Assembly Drawing and Schematic	460-2058-501 600-0468
PC Card Type BCD003-2, Parts List, Assembly Drawing and Schematic	460-2092-502 600-0495-502
PC Card Type CCR049-1, Parts List, Assembly Drawing and Schematic	460-2134-501 600-0502
PC Card Type VAF054-1, Parts List, Assembly Drawing and Schematic	460-2140-501 600-0536

TITLE	NUMBER
PC Card Type VAF055-1, Parts List, Assembly Drawing and Schematic	460-2141-501 600-0537
PC Card Type LLF001-1, Parts List, Assembly Drawing and Schematic	460-2142-501 600-0538
PC Card Type HLF003-1, Parts List, Assembly Drawing and Schematic	460-2143-501 600-0539
INF-IEEE Top Assembly PC Card Type INF056-1, Parts List, Assembly Drawing and Schematic	470-0051-517 460-2269-501 600-0619
IEEE Interface Wire List	730-2422
Chassis Wire List	730-2461
Library Wire List	760-0342

REVISIONS

REV	DESCRIPTION	EFFECTIVE ON S/N	DATE	APPROVED
B	REVISED PER ECO 15407 JH 9-17-87		9-28-87	
C	REVISED PER ECO 15760		4 Jan 88	BSU 1/2
D	REVISED PER ECO 15979		2/10/88	
E	REVISED PER ECO 16967		9/19/88	
F	REVISED PER ECO 17062		12/2/88	
G	REVISED PER ECO 17347		5/22/89	
H	REVISED PER ECO 18823 T.N 1.4.90		1/4/90	
J	REVISED PER ECO 19223		3-8-90	D. Duckett

SHEET	1	2	3	4	5	6	7	8	9	10	11	12	13	14	15	16	17	18	19	20	21	22	23
REVISION	J	J	J	J																			

XX AYDIN MONITOR SYSTEMS
FORT WASHINGTON, PENNA. 19034

TITLE PCM BIT SYNCHRONIZER
MODEL 335A-BASIC

CODE IDENT 20747
CONTRACT NO. 1368-83

DRAWN	J. HOEFLER	10/24/86	ENGINEER		10/30/86	DWG NO.	REV
CHECKED		11/18/86	APPROVED		11/18/86	PL 356-0181-500	J
DRAFTING		11-25-86	M.E.		11/26/86	SHEET 1 OF 4	

800-0066

800-0129 MONITOR SYSTEMS INC

POSITION NO.		1	2	3	4	5	6	7	8	9	10	11	12	13	14	15	16
KEY AND CONNECTOR POSITIONS AND P.C. CARD TYPES	FILE A1	INP 0671	VAF 054-1	SLC 029-1	VAF 055-1		SLC 030-1	THD 001-1	OPT	PDT 020-1	HLF 003-1	LLF 001-1	CSD 002-1	CCR 049-1		ACL 009-1	BCD 003-2
	KEY	X	10/16	8/22	12/22		8/22	10/36	12/18	8/16	12/32	12/30	12/34	X	X	12/34	X
	FILE A2																
	KEY																
	FILE A3																
	KEY																

POSITION NO.		17	18	19	20	21	22	23	24	25	26	27	28	29	30	31	32
KEY AND CONNECTOR POSITIONS AND P.C. CARD TYPES	FILE A1		OPEN		OPEN	LDR 050-1	OPT	LDR 053-1	OPT								
	KEY	X	X	X	X	10/24	10/24	8/16	8/16								
	FILE A2																
	KEY																
	FILE A3																
	KEY																

ALL CARDS ARE KEYED 8/12 UNLESS OTHERWISE NOTED.

DRAWN J. HOEFLER	CHECKED	TITLE PCM BIT SYNCHRONIZER MODEL 335A BASIC	CODE IDENT NO. 20747	DWG. NO. PL 356-0181-500	REV J
DATE 10/10/86	DATE			SHEET 2 OF 4	

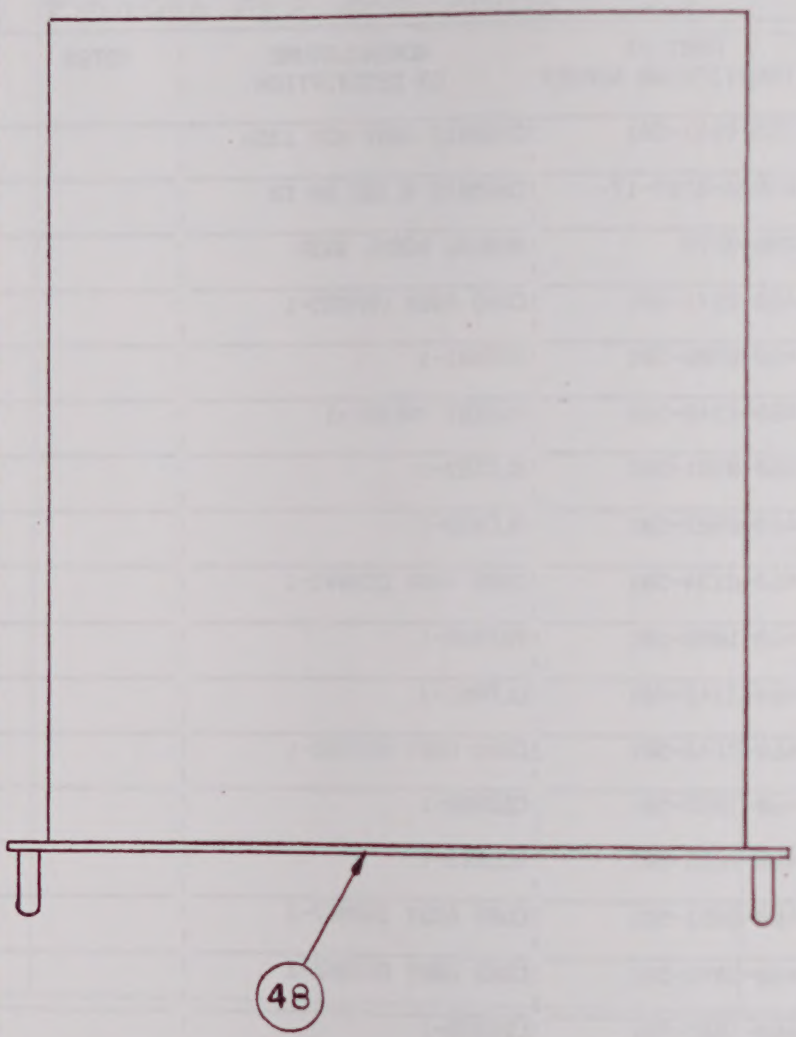

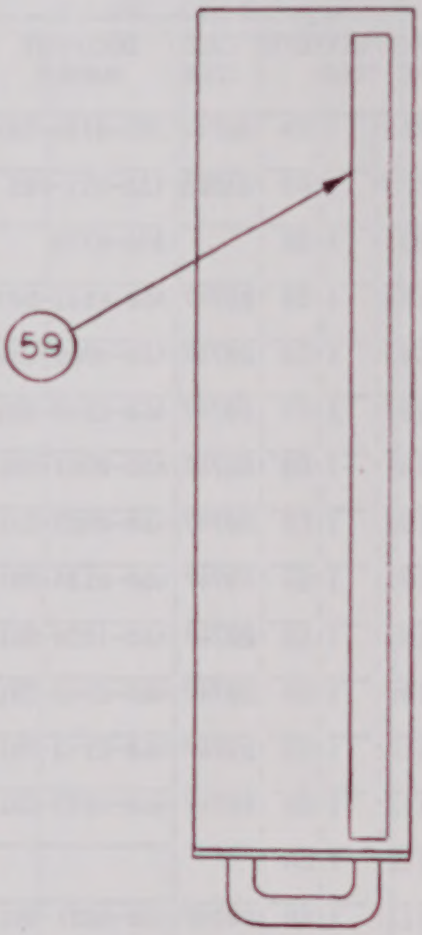

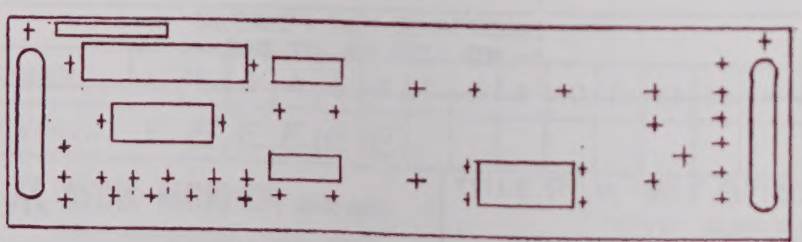

AYDIN MONITOR SYSTEMS

800-0153 A

CODE IDENT NO.	DWG NO.	REV
20747	PL 356-0181-500	J
	SHEET 3 OF 4	

PARTS LIST	DESIGN ACTIVITY IDENTIFICATION AYDIN COMPUTER AND MONITOR DIVISION HORSHAM, PA. 19044	CONTRACT NO. 9910	CAGE CODE 20747	PL356-0181-500	REV J

LIST TITLE MODEL 335A-STD	SUBCONTRACT NO.		SHEET NO. 4

FIND NO	QTY REQ	U/M	CAGE CODE	DOCUMENT NUMBER	PART OR IDENTIFYING NUMBER	NOMENCLATURE OR DESCRIPTION	NOTES
048	1	EA	20747	355-0181-501	355-0181-501	CHASSIS ASSY MOD 335A	
059	1	PR	83508	132-031-005	03000-0107-17-	CHASSIS SLIDE 20 IN	
077	1	EA		298-0779	298-0779	MANUAL MODEL 335A	
101	1	EA	20747	460-2141-501	460-2141-501	CARD ASSY VAF055-1	
102	1	EA	20747	460-0906-501	460-0906-501	THD001-1	
103	1	EA	20747	460-2140-501	460-2140-501	PARENT VAF054-1	
104	1	EA	20747	460-0921-501	460-0921-501	SLC029-1	
106	1	EA	20747	460-0927-501	460-0927-501	SLC030-1	
107	1	EA	20747	460-2134-501	460-2134-501	CARD ASSY CCR049-1	
108	1	EA	20747	460-1058-501	460-1058-501	PDT020-1	
109	1	EA	20747	460-2142-501	460-2142-501	LLF001-1	
110	1	EA	20747	460-2143-501	460-2143-501	CARD ASSY HLF003-1	
111	1	EA	20747	460-1095-501	460-1095-501	CSD002-1	
112	1	EA			460-1823-501	ACL009-1	
113	1	EA	20747	460-2051-501	460-2051-501	CARD ASSY INP067-1	
114	1	EA	20747	460-2092-502	460-2092-502	CARD ASSY BCD003-2	
115	1	EA	20747	460-1985-501	460-1985-501	LDR050-1	
116	1	EA	20747	460-2058-501	460-2058-501	CARD ASSY LDR053-1	
				AT 297-1180		ACCEPTANCE TEST PROCEDURE - MOD 335A PCM BIT SYNC	

REVISIONS

REV	DESCRIPTION	EFFECTIVE ON S/N	DATE	APPROVED
B	REVISED PER ECO 14547		3/19/87	
C	REVISED PER ECO 15413 JH 9-21-87		9/30/87	
D	REVISED PER ECO 163[illegible]		3/5/88	
E	REVISED PER ECO 20103 PM		8-3-90	

SHEET	1	2	3	4	5	6	7	8	9	10	11	12	13	14	15	16	17	18	19	20	21	22	23
REVISION	E	E	E	E	E	E																	

AYDIN MONITOR SYSTEMS
FORT WASHINGTON, PENNA. 19034

TITLE PCM BIT SYNCHRONIZER
TOP ASSEMBLY
MODEL 335A-12-20-30

CODE IDENT 20747
CONTRACT NO. 1368-83

DRAWN	HOEFLER	7-11-86	ENGINEER			DWG NO.	REV
CHECKED		11/18/86	APPROVED		11/18/86	PL356-0181-501	E
DRAFTING		11-25-86	M.E.		11/25/86	SHEET 1 OF 6	

800-0066

800-0129 MONITOR SYSTEMS INC.

POSITION NO.		1	2	3	4	5	6	7	8	9	10	11	12	13	14	15	16
KEY AND CONNECTOR POSITIONS AND P.C. CARD TYPES	FILE A1																
	KEY																
	FILE A2																
	KEY																
	FILE A3																
	KEY																

POSITION NO.		17	18	19	20	21	22	23	24	25	26	27	28	29	30	31	32
KEY AND CONNECTOR POSITIONS AND P.C. CARD TYPES	FILE A1	INF IEEE															
	KEY	X															
	FILE A2																
	KEY																
	FILE A3																
	KEY																

ALL CARDS ARE KEYED 8/12 UNLESS OTHERWISE NOTED.

DRAWN J.HOEFLER DATE 10/28/86	CHECKED DATE	TITLE PCM BIT SYNCHRONIZER TOP ASSEMBLY MODEL 335A	CODE IDENT NO. 20747	DWG. NO. PL 356-0181-501 SHEET 2 OF 6	REV E

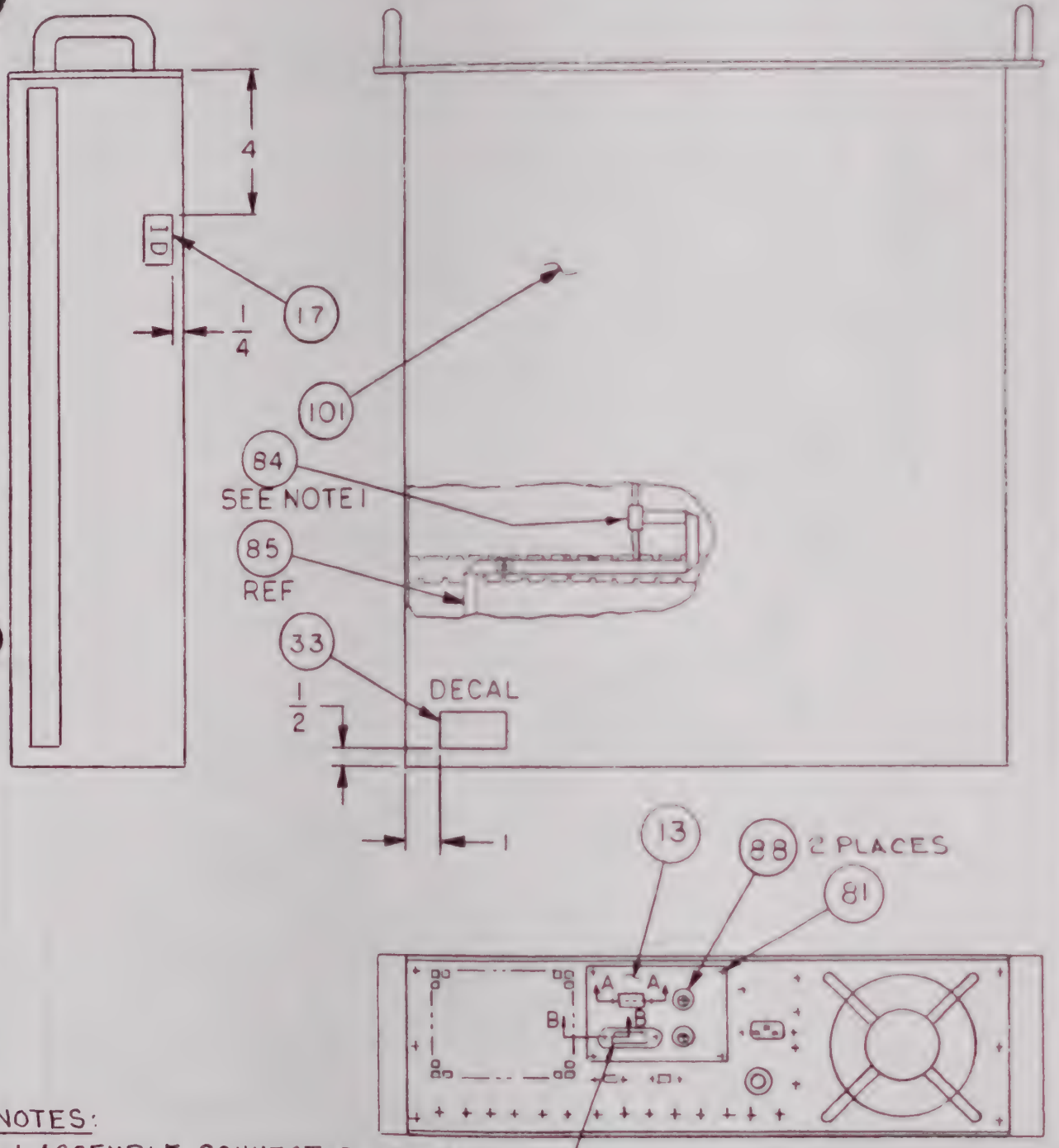

REAR VIEW

NOTES:

1. ASSEMBLE CONNECTOR, ITEM 84, TO SWITCH ASSY CABLE, ITEM 85, AFTER ROUTING CABLE.
2. SEE SHEET 4 FOR SECTION A-A AND B-B.

CODE IDENT NO.	DWG NO.	REV
20747	PL356-0181-501	E
	SHEET 3 OF 6	

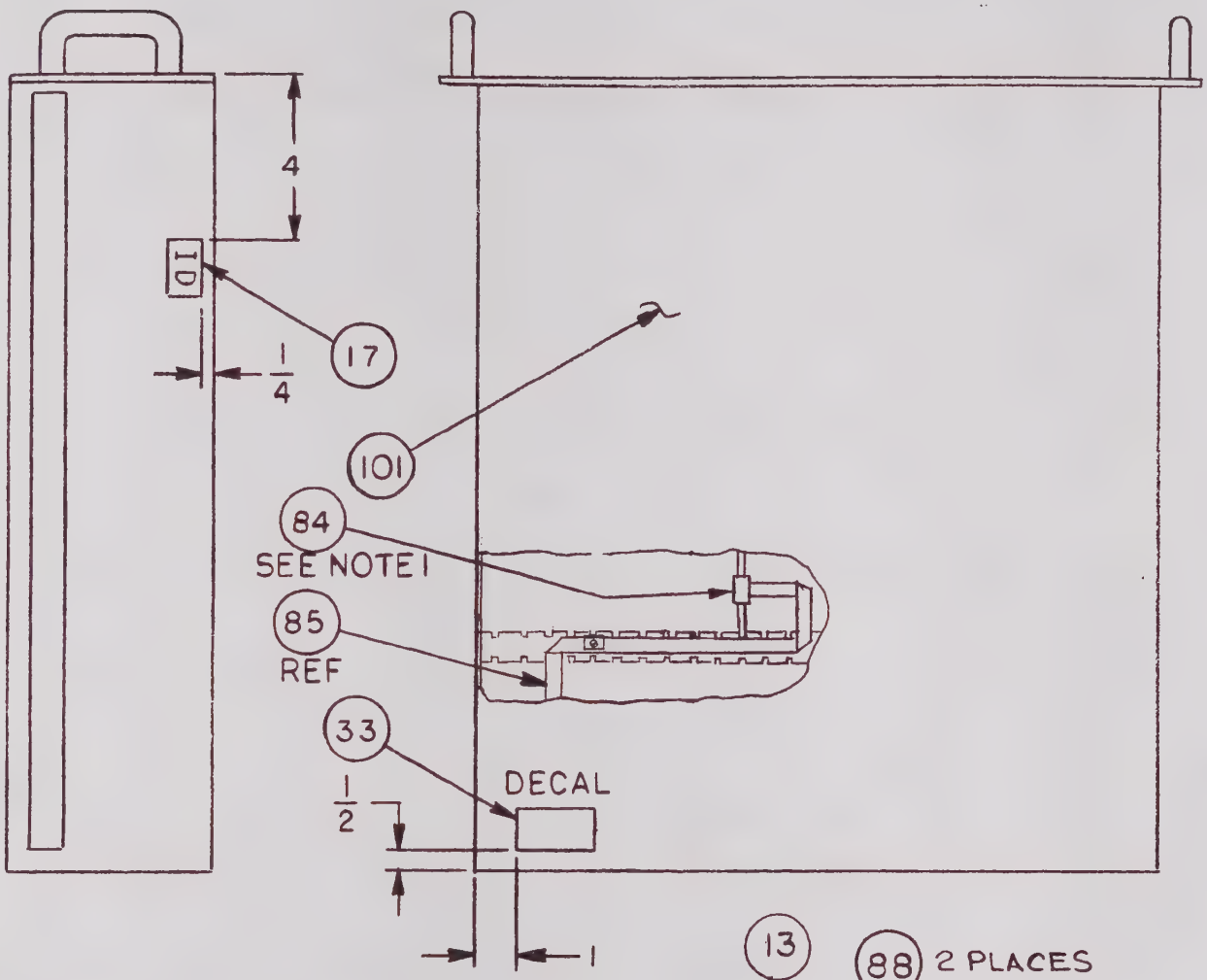

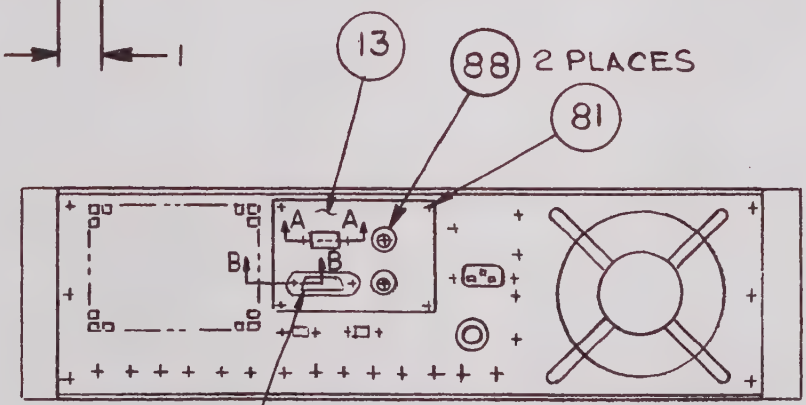

REAR VIEW

NOTES:

1. ASSEMBLE CONNECTOR, ITEM 84, TO SWITCH ASSY CABLE, ITEM 85, AFTER ROUTING CABLE.
2. SEE SHEET 4 FOR SECTION A-A AND B-B.

CODE IDENT NO.	DWG NO.	REV
20747	PL356-0181-501	E
	SHEET 3 OF 6	

AYDIN MONITOR SYSTEMS

808-0153A

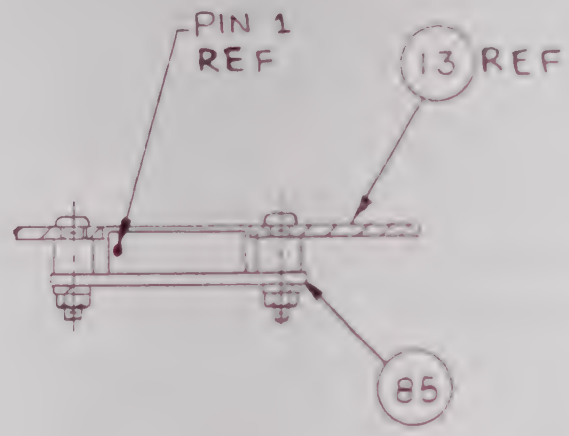

SECTION A-A

SCALE 1:1

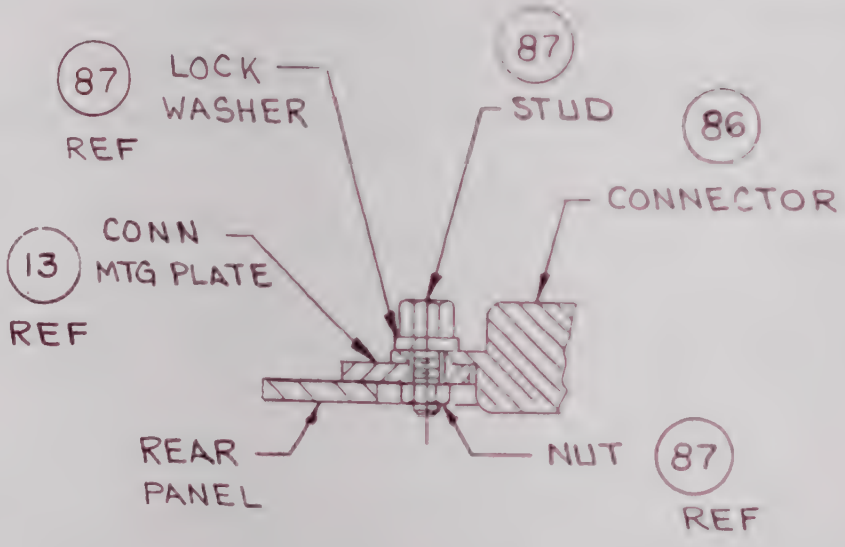

SECTION B-B

SCALE 1:1

AYDIN MONITOR SYSTEMS

800-0153

CODE IDENT NO.	DWG NO.	REV
20747	PL 356-0181-501	E
	SHEET 4 OF 6	

PARTS LIST	DESIGN ACTIVITY IDENTIFICATION	CONTRACT NO.	CAGE CODE		REV
	AYDIN COMPUTER AND MONITOR DIVISION HORSHAM, PA. 19044	6988	20747	PL356-0181-501	E

LIST TITLE	SUBCONTRACT NO.		SHEET NO.
335A-12-20-30			5

FIND NO	QTY REQ	U/M	CAGE CODE	DOCUMENT NUMBER	PART OR IDENTIFYING NUMBER	NOMENCLATURE OR DESCRIPTION	NOTES
013	1	EA		207-0704-002	207-0704-002	PLATE CONN MTG	
017	1	EA	20747	124-013-001	124-013-001	NAMEPLATE SELF ADHES	
033	1	EA		216-0370-011	216-0370-011	DECAL CONN IDENT	
081	4	EA	96906	127-109-014	MS51957-14	SCR PAN HD 4-40X5\16	
084	1	EA	15912	108-273-110	622-1015	CONN CARD EDGE 10 POS	A1A17-P3
085	1	EA	20747	351-0383-501	351-0383-501	UNIT CODE SW ASSY	S33
086	1	EA	29587	108-113-009	57-20240-2	CONN RECEP 24 CONTACT	J17
087	1	EA	29587	108-113-101	408-15277-6	CONN MTG HARDWARE	
088	2	EA	14949	108-302-001	BJ-27	COAX BNC SOLDER PIN	J15 J19
089	1	EA	20747	354-0181-501	354-0181-501	335 ACC KIT	
100	1	EA	20747	470-0051-517	470-0051-517	INF045-335A-IEEE	
101	1	EA	20747	356-0181-500	356-0181-500	MODEL 335A-STD	
				ID 353-0071		INSTALLATION DIAGRAM - RACK MTG	
				WL 730-2422		WIRE LIST - IEEE INTERFACE	
				AT 297-1180		ACCEPTANCE TEST PROCEDURE - MOD 335A PCM BIT SYNC	

PL356-0181-501 E
SHEET 5

REVISIONS

REV	DESCRIPTION	EFFECTIVE ON S/N	DATE	APPROVED
B	REVISED PER ECO 15414 JH 9-21-87		9/[illegible]/87	[signature]
C	REVISED PER ECO 16309		11/5/88	[signature]
D	REVISED PER ECO 20107 PM		8-3-90	[signature]
E	REVISED PER ECO 21052		8/13/91	[signature]

SHEET	1	2	3	4	5	6	7	8	9	10	11	12	13	14	15	16	17	18	19	20	21	22	23
REVISION	E	E	E	E	E																		

AYDIN MONITOR SYSTEMS
FORT WASHINGTON, PENNA. 19034

TITLE PCM BIT SYNCHRONIZER
TOP ASSEMBLY
MODEL 335A-10-20-30

CODE IDENT 20747
CONTRACT NO. 1368-83

DRAWN	J. HOEFLER	10/27/86	ENGINEER	[signature]	10 NOV 86	DWG NO.	REV
CHECKED	[signature]	11/18/86	APPROVED	[signature]	11/19/86	PL 356-0181-502	E
DRAFTING	[signature]	11-25-86	M.E.	[signature]	11/25/86	SHEET 1 OF 5	

800-0066

800-0129 MONITOR SYSTEMS INC.

POSITION NO.		1	2	3	4	5	6	7	8	9	10	11	12	13	14	15	16
KEY AND CONNECTOR POSITIONS AND P.C. CARD TYPES	FILE A1																
	KEY																
	FILE A2																
	KEY																
	FILE A3																
	KEY																

POSITION NO.		17	18	19	20	21	22	23	24	25	26	27	28	29	30	31	32
KEY AND CONNECTOR POSITIONS AND P.C. CARD TYPES	FILE A1	INF 043-1															
	KEY	X															
	FILE A2																
	KEY																
	FILE A3																
	KEY																

ALL CARDS ARE KEYED 8/12 UNLESS OTHERWISE NOTED.

DRAWN J. HOEFLER DATE 10/28/86	CHECKED DATE	TITLE PCM BIT SYNCHRONIZER TOP ASSEMBLY MODEL 335A	CODE IDENT NO. 20747	DWG. NO. PL 356-0181-502 SHEET 2 OF 5	REV E

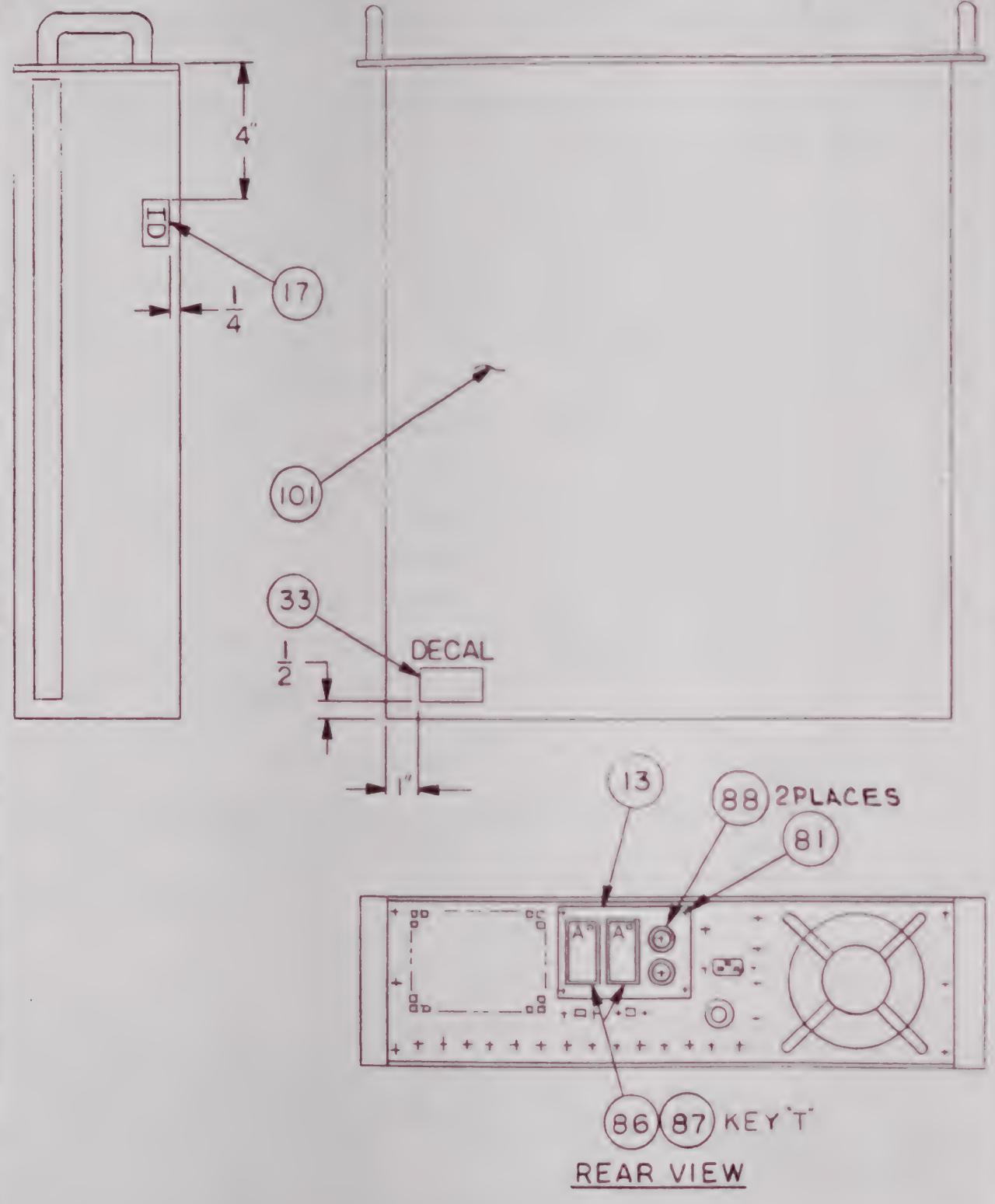

AYDIN MONITOR SYSTEMS

800-0152

CODE IDENT NO.	DWG NO.	REV
20747	PL356-0181-502	E
	SHEET 3 OF 5	

PARTS LIST	DESIGN ACTIVITY IDENTIFICATION: AYDIN COMPUTER AND MONITOR DIVISION, HORSHAM, PA. 19044	CONTRACT NO.	CAGE CODE: 20747	PL356-0181-502	REV: E

LIST TITLE	SUBCONTRACT NO.	SHEET NO.
335A-10-20-30		4

FIND NO	QTY REQ	U/M	CAGE CODE	DOCUMENT NUMBER	PART OR IDENTIFYING NUMBER	NOMENCLATURE OR DESCRIPTION	NOTES
013	1	EA		207-0704-004	207-0704-004	PLATE CONN MTG	
017	1	EA	20747	124-013-001	124-013-001	NAMEPLATE SELF ADHES	
033	1	EA		216-0370-011	216-0370-011	DECAL CONN IDENT	
081	4	EA	96906	127-109-014	MS51957-14	SCR PAN HD 4-40X5\16	
085	36	EA	00779	108-101-109	66107-1	CONN PIN CONT 26-24	
086	2	EA	20747	108-101-010	108-101-010	CONNECTOR 34 POS MALE	J17 J18
087	68	EA	00779	108-101-112	66103-1	CONN PIN CONT 22-20	
088	2	EA	14949	108-302-001	BJ-27	COAX BNC SOLDER PIN	J15 J19
089	1	EA	20747	354-0181-502	354-0181-502	335 ACC	
100	1	EA	20747	460-1990-501	460-1990-501	CARD ASSY INF043-1	
101	1	EA	20747	356-0181-500	356-0181-500	335A (STD)	
				ID 353-0071		INSTALLATION DIAGRAM - RACK MTG	
				WL 730-2423		WIRE LIST - 16 BIT INTERFACE	
				AT 297-1180		ACCEPTANCE TEST PROCEDURE - MOD 335A PCM BIT SYNC	

PL 356-0181-502 E

REVISIONS

REV	DESCRIPTION	EFFECTIVE ON S/N	DATE	APPROVED
B	REVISED PER ECO 15415 JH 9-21-87		9-24-87	[signature]
C	REVISED PER ECO 16310		11/5/88	[signature]
D	REVISED PER ECO 20103 PM		4-3-90	[signature]

SHEET	1	2	3	4	5	6	7	8	9	10	11	12	13	14	15	16	17	18	19	20	21	22	23
REVISION	D	D	D	D	D																		

AYDIN MONITOR SYSTEMS
FORT WASHINGTON, PENNA. 19034

TITLE PCM BIT SYNCHRONIZER
TOP ASSEMBLY
MODEL 335 A-11-20-30

CODE IDENT 20747
CONTRACT NO. 1368-83

DRAWN	J. HOEFLER	10/27/86	ENGINEER	[signature]	10/31/86	DWG NO. 356-0181-503	REV D
CHECKED	[signature]	11/18/86	APPROVED	[signature]	11/18/86		
DRAFTING	[signature]	11-25-86	M.E.	[signature]	11/25/86	SHEET 1 OF 5	

800-0066

800-0129 MONITOR SYSTEMS INC.

POSITION NO.		1	2	3	4	5	6	7	8	9	10	11	12	13	14	15	16
KEY AND CONNECTOR POSITIONS AND P.C. CARD TYPES	FILE A1																
	KEY																
	FILE A2																
	KEY																
	FILE A3																
	KEY																

POSITION NO.		17	18	19	20	21	22	23	24	25	26	27	28	29	30	31	32
KEY AND CONNECTOR POSITIONS AND P.C. CARD TYPES	FILE A1	INF 043-1															
	KEY	X															
	FILE A2																
	KEY																
	FILE A3																
	KEY																

ALL CARDS ARE KEYED 8/12 UNLESS OTHERWISE NOTED.

DRAWN J. HOEFLER DATE 10/28/86	CHECKED DATE	TITLE PCM BIT SYNCHRONIZER TOP ASSEMBLY MODEL 335	CODE IDENT NO. 20747	DWG. NO. PL 356-0181-503 SHEET 2 OF 5	REV D

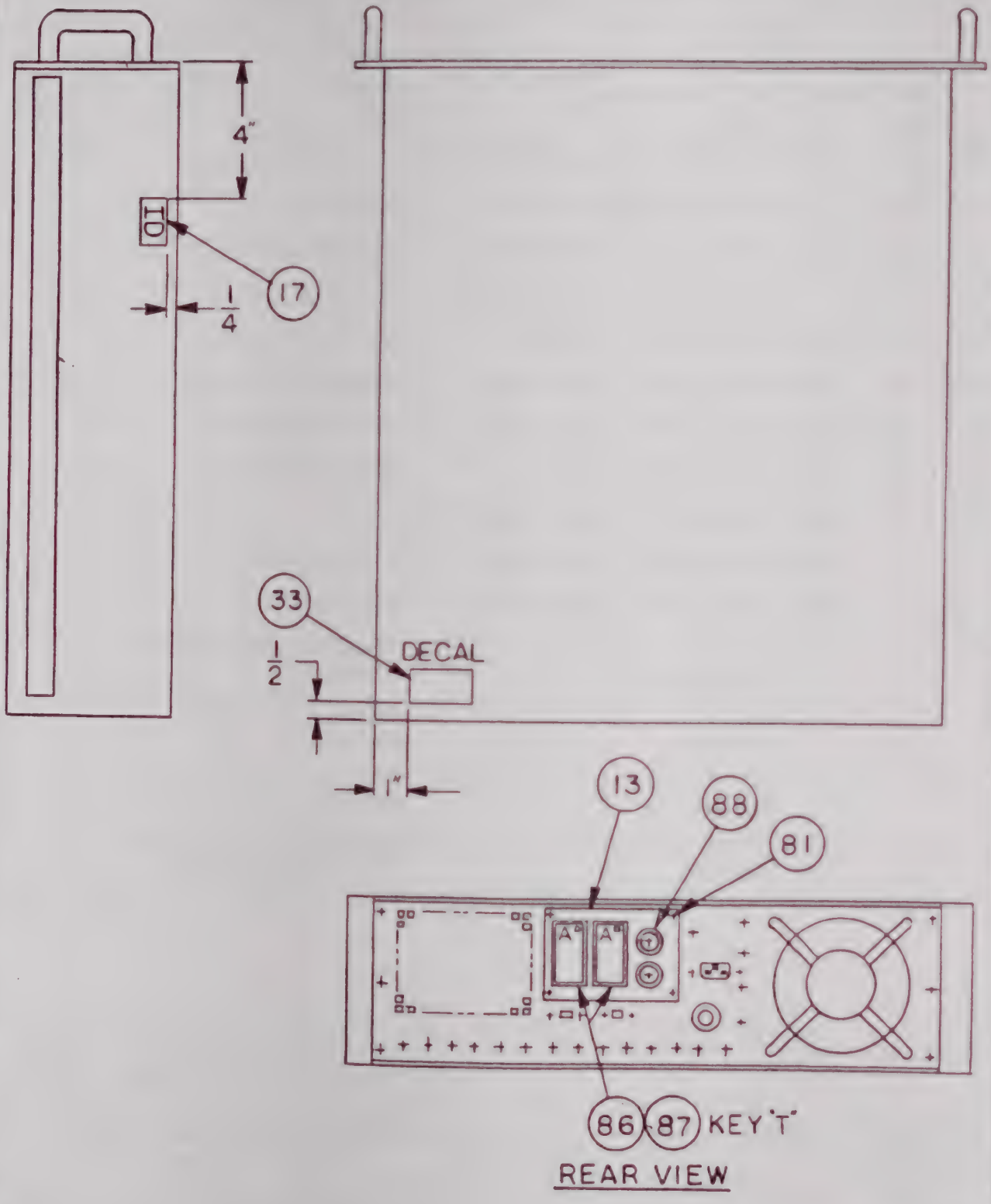

AYDIN MONITOR SYSTEMS

800-0153

CODE IDENT NO.	DWG NO.	REV
20747	PL356-0181-503	D
	SHEET 3 OF 5	

PARTS LIST	DESIGN ACTIVITY IDENTIFICATION	CONTRACT NO.	CAGE CODE		F D
	AYDIN COMPUTER AND MONITOR DIVISION HORSHAM, PA. 19044	6,928	20747	PL356-0181-503	

LIST TITLE	SUBCONTRACT NO.		SHEET NO.
335A-11-20-30			4

FIND NO	QTY REQ	U/M	CAGE CODE	DOCUMENT NUMBER	PART OR IDENTIFYING NUMBER	NOMENCLATURE OR DESCRIPTION	NOTES
013	1	EA		207-0704-004	207-0704-004	PLATE CONN MTG	
017	1	EA	20747	124-013-001	124-013-001	NAMEPLATE SELF ADHES	
033	1	EA		216-0370-011	216-0370-011	DECAL CONN IDENT	
081	4	EA	96906	127-109-014	MS51957-14	SCR PAN HD 4-40X5\16	
086	2	EA	20747	108-101-010	108-101-010	CONNECTOR 34 POS MALE	J17 J18
087	68	EA	00779	108-101-108	108-101-118	CONN PIN CONT 26-24	
088	2	EA	14949	108-302-001	BJ-27	COAX BNC SOLDER PIN	J15 J19
089	1	EA	20747	354-0181-502	354-0181-502	335 ACC	
100	1	EA	20747	460-1990-501	460-1990-501	CARD ASSY INF043-1	
101	1	EA	20747	356-0181-500	356-0181-500	MODEL 335A-STD	
				AT 297-0477-504		ACCEPTANCE TEST PROCEDURE - MODEL 335	
				ID 353-0071		INSTALLATION DIAGRAM - RACK MTG	
				WL 730-2421		WIRE LIST - 16 BIT 1126B INTFACE	
				AT 297-1180		ACCEPTANCE TEST PROCEDURE - MOD 335A PCM BIT SYNC	

PL356-0181-503 D
SHEET 4

REVISIONS

REV	DESCRIPTION	EFFECTIVE ON S/N	DATE	APPROVED
A	RELEASED PER ECO 16617		6/1/88	[illegible]
B	REV PER ECO 19406 PM		4-6-90	[illegible]
C	REV PER ECO 2003 PM		8-3-90	[illegible]
D	REV PER [illegible]		2-13-92	[illegible]

SHEET	1	2	3	4	5	6	7	8	9	10	11	12	13	14	15	16	17	18	19	20	21	22	23
REVISION																							

AYDIN MONITOR SYSTEMS
FORT WASHINGTON, PENNA. 19034

TITLE PCM BIT SYNCHRONIZER TOP ASSEMBLY MODEL 335A-13-20-30

CODE IDENT 20747

CONTRACT NO. 1223-90

DRAWN	A. J. MATOUR	6/1/88	ENGINEER	[illegible]	6/1/88	DWG NO. PL356-0181-504	REV D
CHECKED			APPROVED	[illegible]	6/1/88		
DRAFTING	A J Matour	6/1/88	M.E.	A J Matour	6/1/88	SHEET 1 OF 6	

800-0066

800-0197A AYDIN MONITOR SYSTEMS

POSITION NO.		1	2	3	4	5	6	7	8	9	10	11	12	13	14	15	16
KEY AND CONNECTOR POSITIONS AND P.C. CARD TYPES	FILE A1																
	KEY	/	/	/	/	/	/	/	/	/	/	/	/	/	/	/	/
	FILE A2																
	KEY	/	/	/	/	/	/	/	/	/	/	/	/	/	/	/	/
	FILE A3																
	KEY	/	/	/	/	/	/	/	/	/	/	/	/	/	/	/	/
	FILE A4																
	KEY	/	/	/	/	/	/	/	/	/	/	/	/	/	/	/	/

POSITION NO.		17	18	19	20	21	22	23	24	25	26	27	28	29	30	31	32
KEY AND CONNECTOR POSITIONS AND P.C. CARD TYPES	FILE A1	INF 031															
	KEY	X	/	/	/	/	/	/	/	/	/	/	/	/	/	/	/
	FILE A2																
	KEY	/	/	/	/	/	/	/	/	/	/	/	/	/	/	/	/
	FILE A3																
	KEY	/	/	/	/	/	/	/	/	/	/	/	/	/	/	/	/
	FILE A4																
	KEY	/	/	/	/	/	/	/	/	/	/	/	/	/	/	/	/

DRAWN BY A. MATOUR DATE 6/1/88	CHECKED DATE	TITLE PCM BIT SYNCHRONIZER TOP ASSEMBLY MODEL 335A	CODE IDENT NO. 20747	DWG. NO. PL356-0181-504 SHEET 2 OF 6	REV D

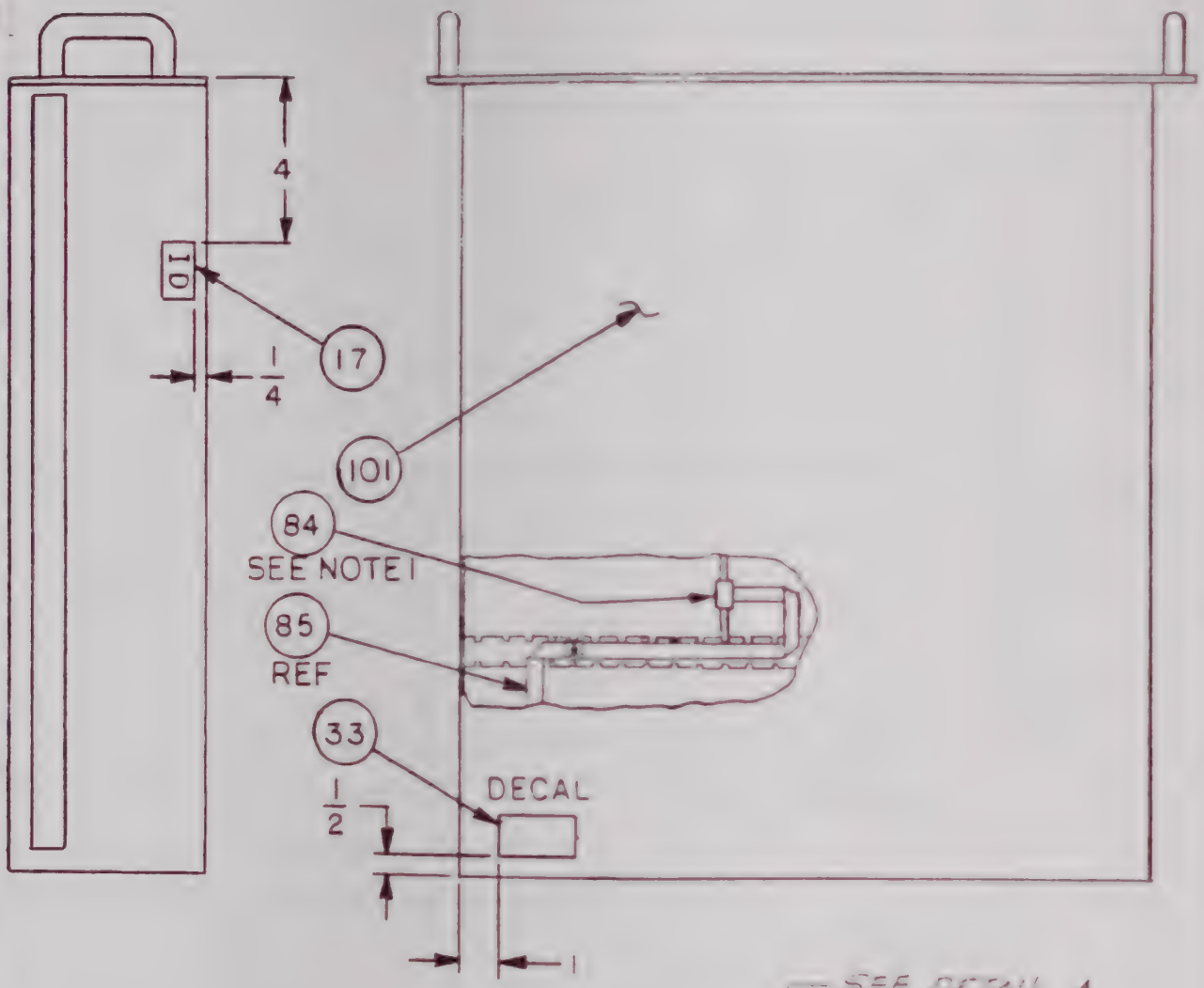

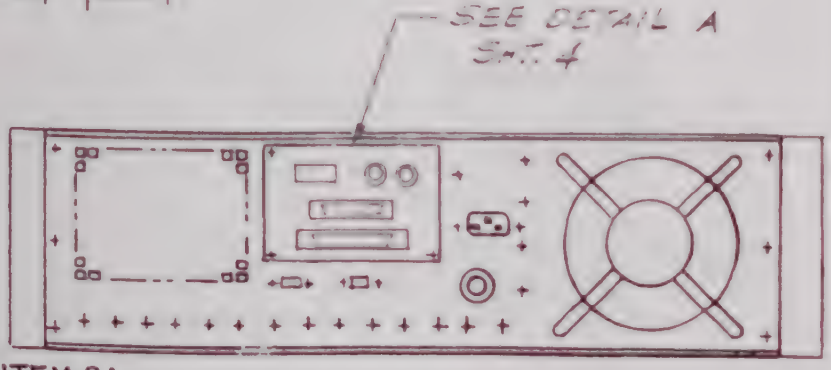

NOTES:

1. ASSEMBLE CONNECTOR, ITEM 84, TO SWITCH ASSY CABLE, ITEM 85, AFTER ROUTING CABLE.

REAR VIEW

CODE IDENT NO.	DWG NO.	REV
20747	PL 356-0181-504	D
	SHEET 3 OF 6	

ATOM MONITOR SYSTEMS

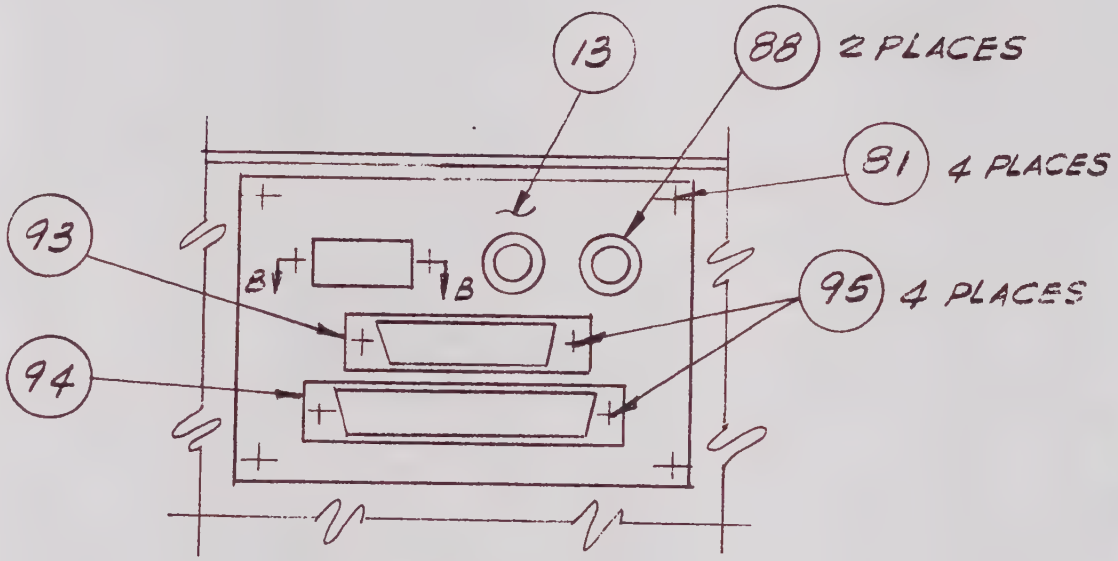

DETAIL A

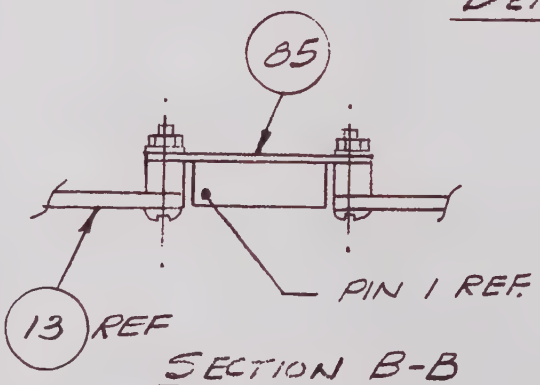

SECTION B-B

AYDIN MONITOR SYSTEMS

800-0153A

CODE IDENT NO.	DWG NO.	REV
20747	PL356-0181-504	D
	SHEET 4 OF 6	

PARTS LIST	DESIGN ACTIVITY IDENTIFICATION AYDIN COMPUTER AND MONITOR DIVISION HORSHAM, PA. 19044	CONTRACT NO.	CAGE CODE 20747	PL356-0181-504	REV D

LIST TITLE	SUBCONTRACT NO.		SHEET NO.
335A-13-20-30			5

FIND NO	QTY REQ	U/M	CAGE CODE	DOCUMENT NUMBER	PART OR IDENTIFYING NUMBER	NOMENCLATURE OR DESCRIPTION	NOTES
013	1	EA	20747	207-0704-012	207-0704-012	PLATE CONN MTG	
017	1	EA	20747	124-013-001	124-013-001	NAMEPLATE SELF ADHES	
033	1	EA	20747	216-0370-011	216-0370-011	DECAL CONN IDENT	
081	4	EA	96906	127-109-014	MS51957-14	SCR FHM HD 4-40X5\16	
084	1	EA	15912	108-273-110	622-1015	CONN CARD EDGE 10 POS	A1A17-P3
085	1	EA	20747	351-0412-501	351-0412-501	UNIT CODE 338 ASSY	S33
088	2	EA	14949	108-302-001	BJ-27	COAX BNC SOLDER PIN	J15 J19
089	1	EA	20747	354-0181-501	354-0181-501	335 ACC KIT	
093	1	EA	71468	108-100-006	DB-25S	CONN 25 SOCKET SOLD	J17
094	1	EA	71468	108-100-008	DC-37S	CONN 37 SOCKET GOLD	J20
095	4	PR	71468	108-104-045	D20418-2	CONN SCR LOCK FEMALE	
100	1	EA	20747	470-0089-509	470-0089-509	INF031-335A-13	
101	1	EA	20747	356-0181-500	356-0181-500	335A (STD)	
				ID 353-0071		INSTALLATION DIAGRAM - RACK MTG PROCEDURE	
				WL 730-2454		WIRE LIST - RS232/RS422 INTERFACE	
				AT 297-1180		ACCEPTANCE TEST PROCEDURE - MOD 335A PCM BIT SYNC	
				AT 297-1342		ACCEPTANCE TEST PROCEDURE - ATP MODEL 335A-13	

REVISIONS

REV	DESCRIPTION	EFFECTIVE DN S/N	DATE	APPROVED
A	RELEASED PER ECO 16030		2/12/88	[signature]
B	REVISED PER ECO 16482 [illegible]		5/10/89	[signature]
C	REVISED PER ECO 20103 PM		8-3-90	V. Polely

SHEET	1	2	3	4	5	6	7	8	9	10	11	12	13	14	15	16	17	18	19	20	21	22	23
REVISION	C	C	C	C	C																		

AYDIN MONITOR SYSTEMS
FORT WASHINGTON, PENNA. 19034

TITLE PCM BIT SYNCHRONIZER TOP ASSEMBLY MODEL 335A-10-21-30

CODE IDENT 20747

CONTRACT NO. 1168-90

DRAWN	A. MATOUR	2/11/88	ENGINEER	JACOB W LAYER	2/12/88	DWG NO.	REV
CHECKED	[signature]	2/12/88	APPROVED	[signature]	2/12/88	PL356-0181-507	C
DRAFTING			M.E	[signature]	2/12/88	SHEET 1 OF 5	

800-0066

800-0129 MONITOR SYSTEMS INC.

POSITION NO.		1	2	3	4	5	6	7	8	9	10	11	12	13	14	15	16
KEY AND CONNECTOR POSITIONS AND P.C. CARD TYPES	FILE A1								BSD 001-3								
	KEY								12/18								
	FILE A2																
	KEY																
	FILE A3																
	KEY																

POSITION NO.		17	18	19	20	21	22	23	24	25	26	27	28	29	30	31	32
KEY AND CONNECTOR POSITIONS AND P.C. CARD TYPES	FILE A1	INF 043-1					LDR 050-1										
	KEY	X					10/24										
	FILE A2																
	KEY																
	FILE A3																
	KEY																

ALL CARDS ARE KEYED 8/12 UNLESS OTHERWISE NOTED.

DRAWN	CHECKED	TITLE	CODE IDENT NO.	DWG. NO.	REV
A. MATOUR		PCM BIT SYNCHRONIZER	20747	PL356-0181-507	C
DATE 2/11/88	DATE	TOP ASSEMBLY MODEL 335A		SHEET 2 OF 5	

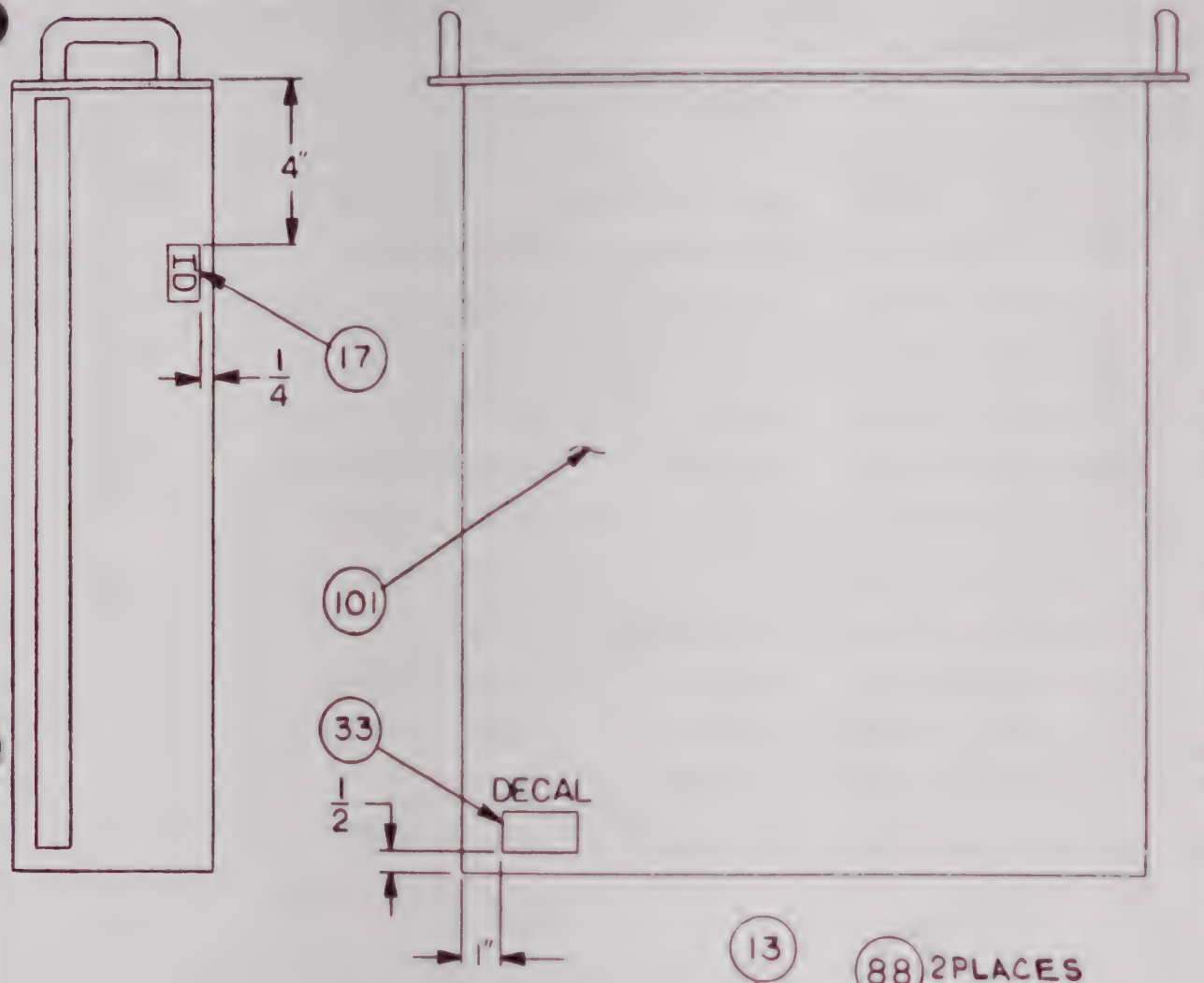

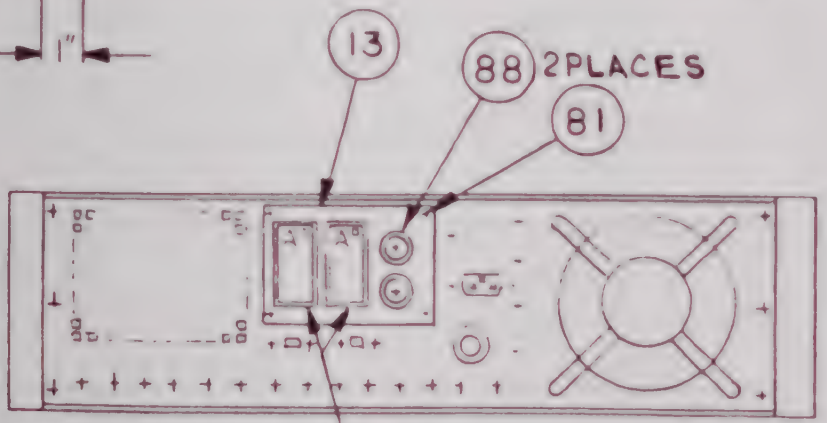

REAR VIEW

NOTE:
1. INSTALL PCB BSD001-3 IN LOCATION A1A8, INF043-1 AT LOCATION A1A17, PCB LDR050-1 AT LOCATION A1A22.

CODE IDENT NO.	DWG NO.	REV
20747	PL356-0181-507	C
	SHEET 3 OF 5	

AYDIN MONITOR SYSTEMS

800-015

PARTS LIST	DESIGN ACTIVITY IDENTIFICATION	CONTRACT NO.	CAGE CODE		REV
	AYDIN COMPUTER AND MONITOR DIVISION HORSHAM, PA. 19044	6928	20747	PL356-0181-507	C

LIST TITLE	SUBCONTRACT NO.		SHEET NO.
335A-10-21-30			4

FIND NO	QTY REQ	U/M	CAGE CODE	DOCUMENT NUMBER	PART OR IDENTIFYING NUMBER	NOMENCLATURE OR DESCRIPTION	NOTES
013	1	EA		207-0704-004	207-0704-004	PLATE CONN MTG	
017	1	EA	20747	124-013-001	124-013-001	NAMEPLATE SELF ADHES	
033	1	EA		216-0370-005	216-0370-005	DECAL CONN IDENT	
081	4	EA	96906	127-109-014	MS51957-14	SCR PAN HD 4-40X5\16	
086	2	EA	20747	108-101-010	108-101-010	CONNECTOR 34 POS MALE	
087	68	EA	00779	108-101-108	108-101-118	CONN PIN CONT 26-24	
088	2	EA	14949	108-302-001	BJ-27	COAX BNC SOLDER PIN	J15 J19
089	1	EA	20747	354-0181-502	354-0181-502	335 ACC	
090	1	EA	20747	460-1990-501	460-1990-501	CARD ASSY INF043-1	
091	1	EA	20747	460-1982-503	460-1982-503	BSD001-3 SOFT BIT DEC	
092	1	EA	20747	460-1985-501	460-1985-501	LDR050-1	
100	1	EA	20747	356-0181-500	356-0181-500	MODEL 335A-STD	
				ID 353-0071		INSTALLATION DIAGRAM - RACK MTG	
				WL 730-2423		WIRE LIST - 16 BIT INTERFACE	
				WL 730-2475		WIRE LIST - 335A SOFT BIT DEC	
				AT 297-1180		ACCEPTANCE TEST PROCEDURE - MOD 335A PCM BIT SYNC	

PL356-0181-507 C
SHEET 4

REVISIONS

REV	DESCRIPTION	EFFECTIVE ON S/N	DATE	APPROVED
A	RELEASED PER ECO 16366		4/8/88	
B	REVISED PER ECO 20103 FM		8-3-90	

SHEET	1	2	3	4	5	6	7	8	9	10	11	12	13	14	15	16	17	18	19	20	21	22	23
REVISION	B	B	B	B	B	B																	

AYDIN MONITOR SYSTEMS
FORT WASHINGTON, PENNA. 19034

TITLE PCM BIT SYNCHRONIZER TOP ASSEMBLY MODEL 335A-12-22-30

CODE IDENT 20747

CONTRACT NO. 1220-90

DRAWN	A. MATOUR	4/7/88	ENGINEER	JACOB W. LAYER	4/8/88	DWG NO.	REV
CHECKED	A. Matour	4/7/88	APPROVED		4/8/88	D1356-0181-508	B
DRAFTING	A. Matour	4/7/88	M.E	A. Matour	4/7/88	SHEET 1 OF 6	

800-0066

800-0129 MONITOR SYSTEMS INC.

POSITION NO.		1	2	3	4	5	6	7	8	9	10	11	12	13	14	15	16
KEY AND CONNECTOR POSITIONS AND P.C. CARD TYPES	FILE A1								BSD 001-2								
	KEY								12/18								
	FILE A2																
	KEY																
	FILE A3																
	KEY																

POSITION NO.		17	18	19	20	21	22	23	24	25	26	27	28	29	30	31	32
KEY AND CONNECTOR POSITIONS AND P.C. CARD TYPES	FILE A1	INF IEEE					LDR 050-1										
	KEY	X					10/24										
	FILE A2																
	KEY																
	FILE A3																
	KEY																

ALL CARDS ARE KEYED 8/12 UNLESS OTHERWISE NOTED.

DRAWN	CHECKED	TITLE	CODE IDENT NO.	DWG. NO.	REV
A. MATOUR		PCM BIT SYNCHRONIZER	20747	PL356-0181-508	B
DATE 4/7/88	DATE	TOP ASSEMBLY - MODEL 335A		SHEET 2 OF 6	

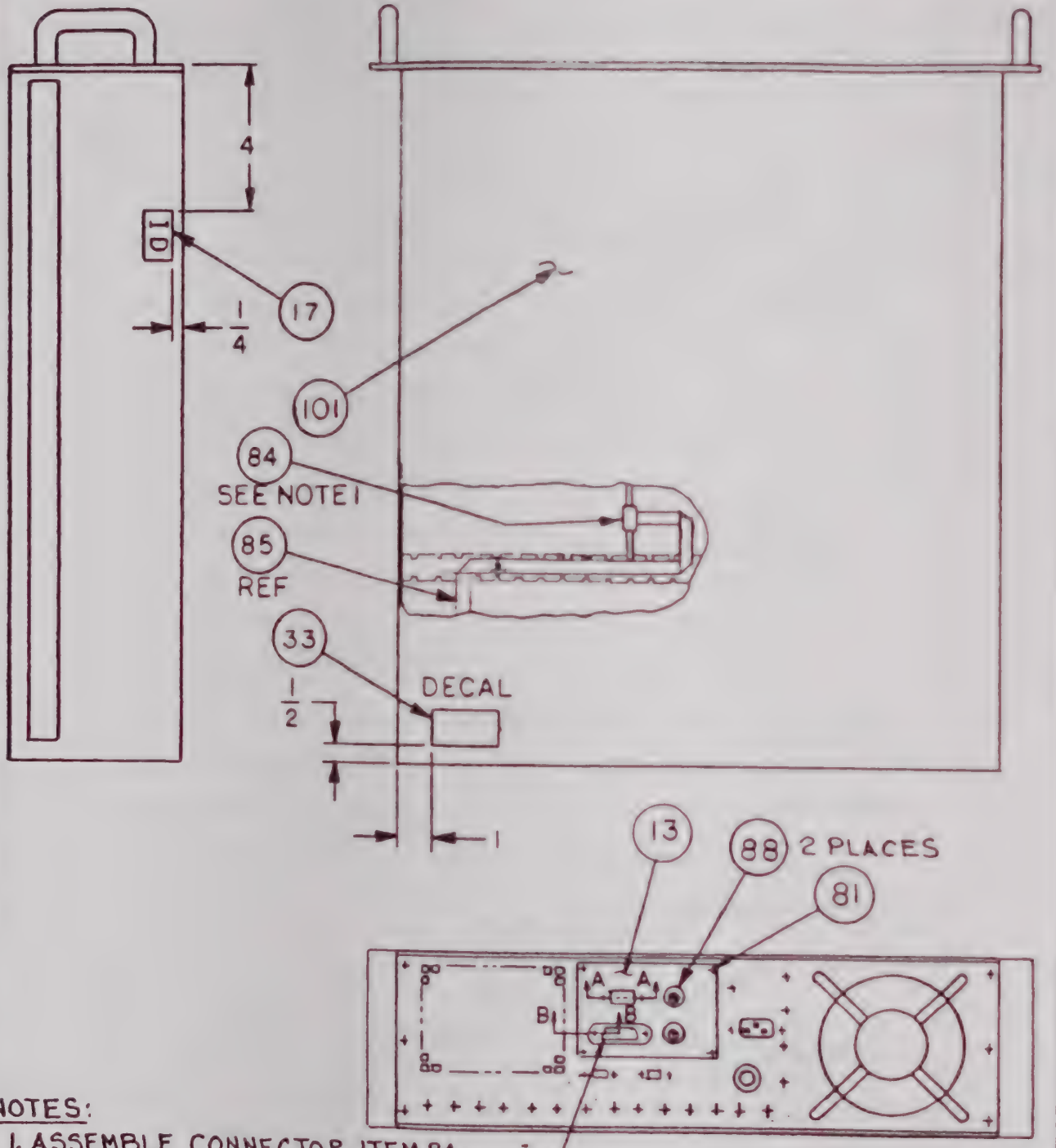

REAR VIEW

NOTES:

1. ASSEMBLE CONNECTOR, ITEM 84, TO SWITCH ASSY CABLE, ITEM 85, AFTER ROUTING CABLE.
2. SEE SHEET 4 FOR SECTION A-A AND B-B.

CODE IDENT NO.	DWG NO.	REV
20747	PL356-0181-508	B
	SHEET 3 OF 6	

AYDIN MONITOR SYSTEMS

800-01

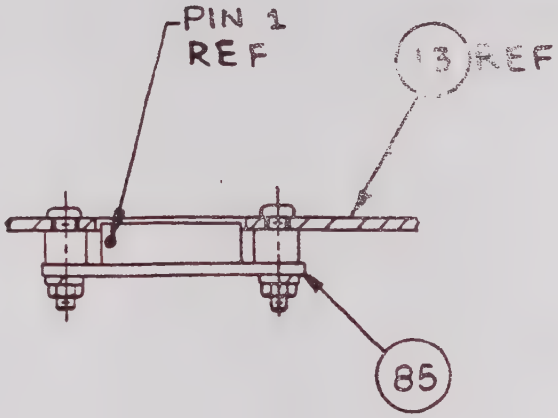

SECTION A-A

SCALE 1:1

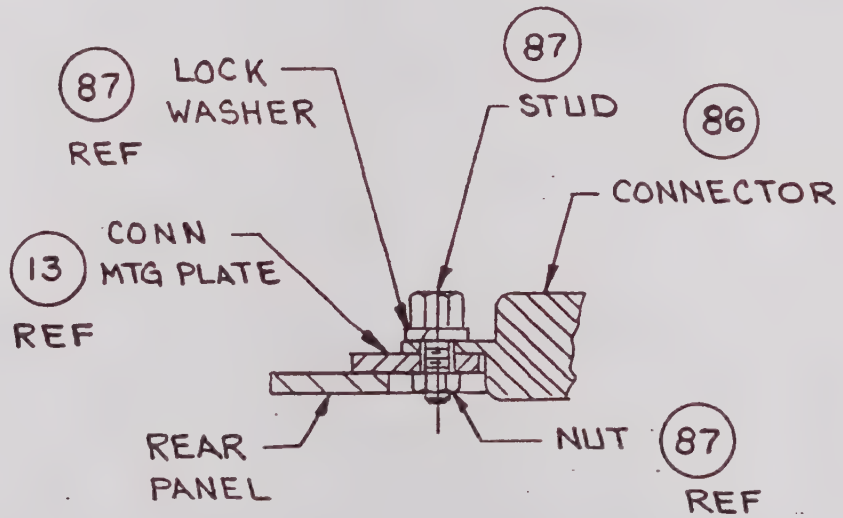

SECTION B-B

SCALE 1:1

CODE IDENT NO.	DWG NO.	REV
20747	PL 356-0181-508	B
	SHEET 4 OF 6	

AYDIN MONITOR SYSTEMS

800-0153A

PARTS LIST	DESIGN ACTIVITY IDENTIFICATION AYDIN COMPUTER AND MONITOR DIVISION HORSHAM, PA. 19044	CONTRACT NO. 6928	CAGE CODE 20747	PL356-0181-508	REV B

LIST TITLE MODEL 335A-12-30-30	SUBCONTRACT NO.		SHEET NO. 5

FIND NO	QTY REQ	U/M	CAGE CODE	DOCUMENT NUMBER	PART OR IDENTIFYING NUMBER	NOMENCLATURE OR DESCRIPTION	NOTES
013	1	EA		207-0704-002	207-0704-002	PLATE CONN MTG	
017	1	EA	20747	124-013-001	124-013-001	NAMEPLATE SELF ADHES	
033	1	EA		216-0370-012	216-0370-012	DECAL CONN IDENT	
081	4	EA	96906	127-109-014	MS51957-14	SCR FLH HD 4-40X5\16	
084	1	EA	15912	108-273-110	622-1015	CONN CARD EDGE 10 POS	A1A17-P3
085	1	EA	20747	351-0383-501	351-0383-501	UNIT CODE SW ASSY	S33
086	1	EA	29587	108-113-009	57-20240-2	CONN RECEP 24 CONTACT	J17
087	1	EA	29587	108-113-101	406-15277-6	CONN MTG HARDWARE	
088	2	EA	14948	108-302-001	BJ-27	CONT SNC SOLDER PIN	J15 J19
089	1	EA	20747	354-0181-501	354-0181-501	335 ACC KIT	
098	1	EA	20747	460-1985-501	460-1985-501	LDR050-1	
099	1	EA	20747	460-1982-502	460-1982-502	BSD001-2 DATA QUALITY	
100	1	EA	20747	470-0051-517	470-0051-517	INF045-335A-IEEE	
101	1	EA	20747	356-0181-500	356-0181-500	MODEL 335A-STD	
				ID 353-0071		INSTALLATION DIAGRAM - RACK MTG	
				WL 730-2422		WIRE LIST - IEEE INTERFACE	
				AT 297-1180		ACCEPTANCE TEST PROCEDURE - MOD 335A PCM BIT SYNC	
				WL 730-2481		WIRE LIST - 335A DATA QUALITY	

PL356-0181-508 B
SHEET 5

REVISIONS

REV	DESCRIPTION	EFFECTIVE ON S/N	DATE	APPROVED
A	RELEASED PER ECO 16369		4/3/88	
B	REVISED PER ECO 16482 AM		5/9/88	
C	REVISED PER ECO 2[illegible] AM		8/3/90	

SHEET	1	2	3	4	5	6	7	8	9	10	11	12	13	14	15	16	17	18	19	20	21	22	23
REVISION	C	C	C	C	C	C																	

AYDIN MONITOR SYSTEMS
FORT WASHINGTON, PENNA. 19034

TITLE: FCM BIT SYNCHRONIZER
TOP ASSEMBLY
MODEL 8554-12-21-30

CODE IDENT: 20747
CONTRACT NO.: 1223-20

DRAWN	A. MATOUR	4/7/88	ENGINEER	JACOB W. LAYER	4/8/88	DWG NO.	REV
CHECKED	A. Matour	4/7/88	APPROVED	[signature]	4/8/88	PL356-0181-509	C
DRAFTING	A. Matour	4/7/88	M.E.	A. Matour	4/7/88	SHEET 1 OF 6	

800-0066

800-0129 MONITOR SYSTEMS INC.

POSITION NO.		1	2	3	4	5	6	7	8	9	10	11	12	13	14	15	16
KEY AND CONNECTOR POSITIONS AND P.C. CARD TYPES	FILE A1								BSD 001-3								
	KEY								12/18								
	FILE A2																
	KEY																
	FILE A3																
	KEY																

POSITION NO.		17	18	19	20	21	22	23	24	25	26	27	28	29	30	31	32
KEY AND CONNECTOR POSITIONS AND P.C. CARD TYPES	FILE A1	INF IEEE					LDR 050-1										
	KEY	X					10/24										
	FILE A2																
	KEY																
	FILE A3																
	KEY																

ALL CARDS ARE KEYED 8/12 UNLESS OTHERWISE NOTED.

DRAWN	CHECKED	TITLE	CODE IDENT NO.	DWG. NO.	REV
A. MATOUK DATE 4/7/88	DATE	PCM BIT SYNCHRONIZER TOP ASSEMBLY MODEL 335A	20747	PL356-0181-509 SHEET 2 OF 6	C

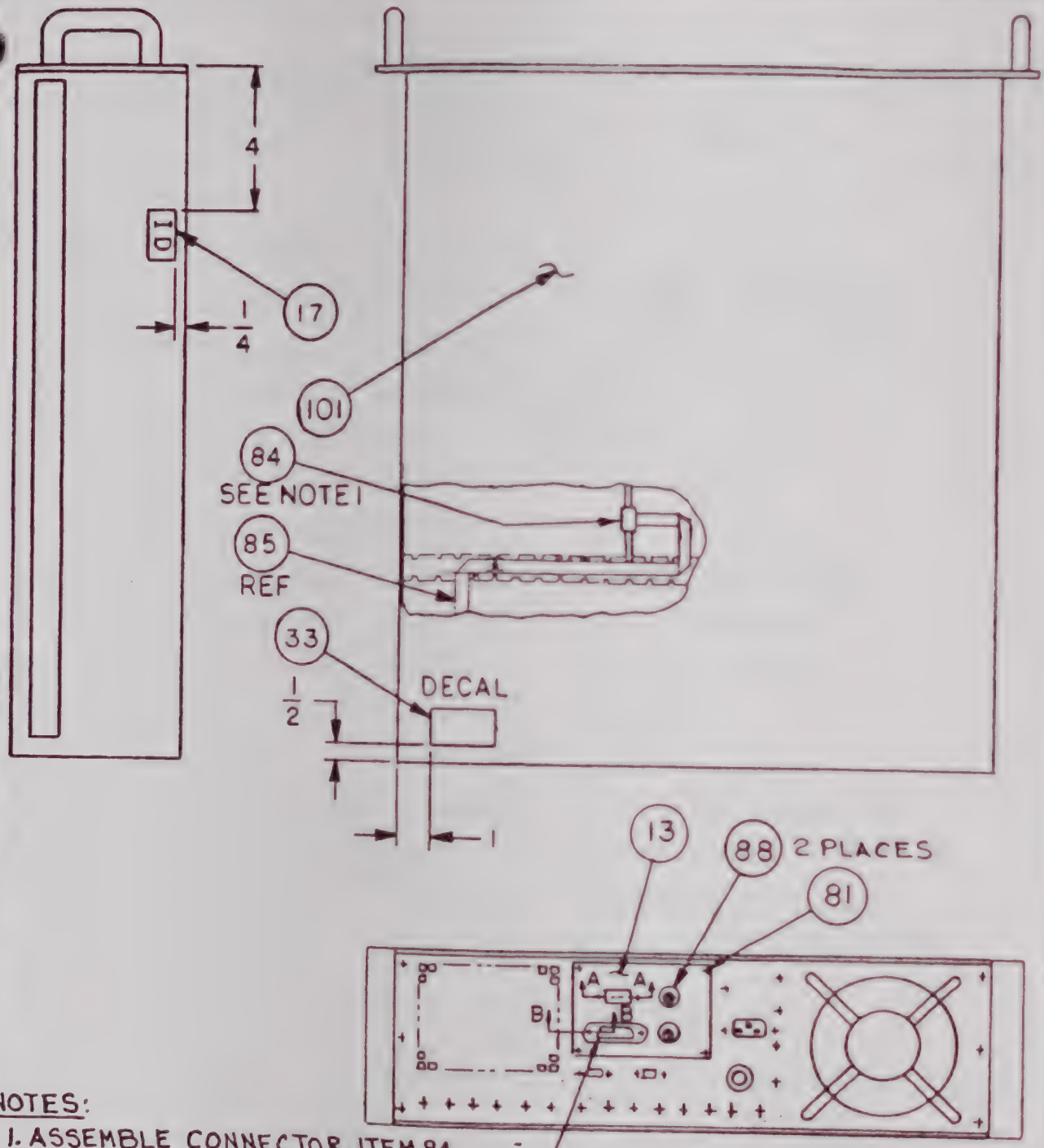

REAR VIEW

NOTES:

1. ASSEMBLE CONNECTOR, ITEM 84, TO SWITCH ASSY CABLE, ITEM 85, AFTER ROUTING CABLE.
2. SEE SHEET 4 FOR SECTION A-A AND B-B.

CODE IDENT NO.	DWG NO.	REV
20747	PL356-0181-509	C
	SHEET 3 OF 6	

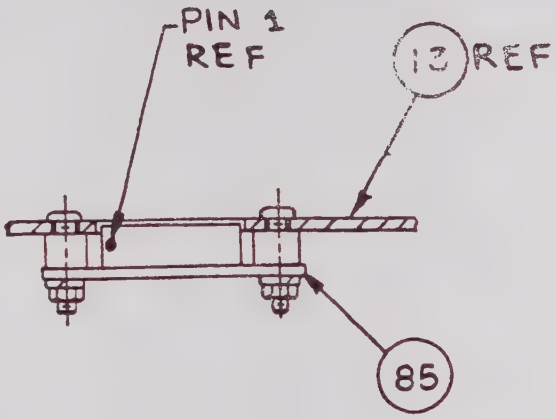

SECTION A-A

SCALE 1:1

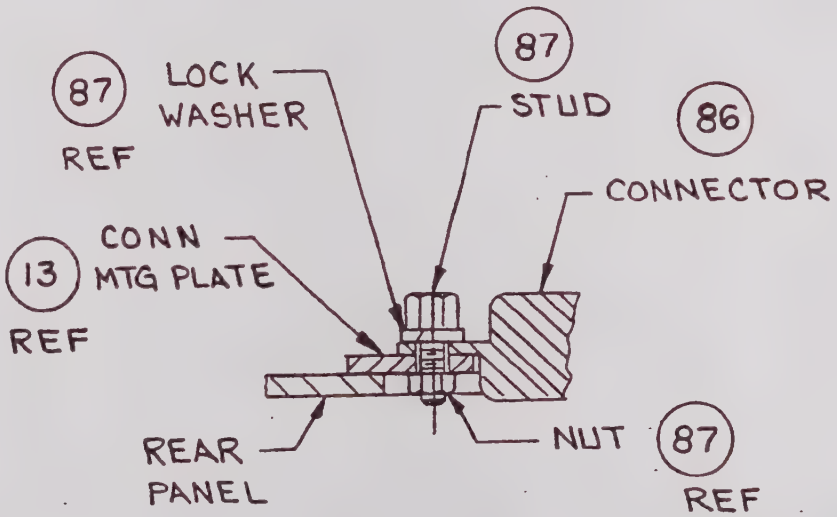

SECTION B-B

SCALE 1:1

AYDIN MONITOR SYSTEMS

800-0153A

CODE IDENT NO.	DWG NO.	REV
20747	PL 356-0181-509	C
	SHEET 4 OF 6	

PARTS LIST	DESIGN ACTIVITY IDENTIFICATION	CONTRACT NO.	CAGE CODE		REV
	AYDIN COMPUTER AND MONITOR DIVISION HORSHAM, PA. 19044	6928	20747	PL356-0181-509	C

LIST TITLE	SUBCONTRACT NO.		SHEET NO.
335A-12-21-30			5

FIND NO	QTY REQ	U/M	CAGE CODE	DOCUMENT NUMBER	PART OR IDENTIFYING NUMBER	NOMENCLATURE OR DESCRIPTION	NOTES
013	1	EA		207-0704-002	207-0704-002	PLATE CONN MTG	
017	1	EA	20747	124-013-001	124-013-001	NAMEPLATE SELF ADHES	
033	1	EA		216-0370-005	216-0370-005	DECAL CONN IDENT	
081	4	EA	96906	127-109-014	MS51957-14	SCR PAN HD 4-40X5\16	
084	1	EA	15912	108-273-110	622-1015	CONN CARD EDGE 10 POS	
085	1	EA	20747	351-0383-501	351-0383-501	UNIT CODE SW ASSY	
086	1	EA	29587	108-113-009	57-20240-2	CONN RECEP 24 CONTACT	
087	1	EA	29587	108-113-101	408-15277-6	CONN MTG HARDWARE	
088	2	EA	14949	108-302-001	BJ-27	COAX BNC SOLDER PIN	
089	1	EA	20747	354-0181-501	354-0181-501	335 ACC KIT	
098	1	EA	20747	460-1985-501	460-1985-501	LDR050-1	
099	1	EA	20747	460-1982-503	460-1982-503	BSD001-3 SOFT BIT DEC	
100	1	EA	20747	470-0051-517	470-0051-517	INF045-335A-IEEE	
101	1	EA	20747	356-0181-500	356-0181-500	MODEL 335A-STD	
				ID 353-0071		INSTALLATION DIAGRAM - RACK MTG	
				WL 730-2422		WIRE LIST - IEEE INTERFACE	
				WL 730-2475		WIRE LIST - 335A SOFT BIT DEC	
				AT 297-1180		ACCEPTANCE TEST PROCEDURE - MOD 335A PCM BIT SYNC	

PL356-0181-509 C
SHEET 5

REVISIONS			
REV	DESCRIPTION	DATE	APPROVED
A	REVISED PER ECO 20103 on	8 3 90	V Polsky

		CONTRACT NO.	AYDIN COMPUTER AND MONITOR Division 700 DRESHER ROAD HORSHAM, PA 19044
		DRAWN S. HORDESKI DATE 1·20·89	PCM BIT SYNCHRONIZER TOP ASSEMBLY MODEL 335A-1Ø
		CHECKED [signature] 1-1/20/89	
		DRAFTING [signature]	
	4952-6401	APPROVED [signature] 1-1/20/89	SIZE A · CAGE CODE 20747 · DWG NO PL356-0181-510 · REV A
NEXT ASSY	USED ON	APPROVED M.E. [signature] 1/27/89	
APPLICATION		APPROVED PROJECT [signature] 1/27/89	SCALE 1/4 · SHEET 1 OF 5

800-0015E

800-0129 MONITOR SYSTEMS INC.

POSITION NO.		1	2	3	4	5	6	7	8	9	10	11	12	13	14	15	16
KEY AND CONNECTOR POSITIONS AND P.C. CARD TYPES	FILE A1																
	KEY																
	FILE A2																
	KEY																
	FILE A3																
	KEY																

POSITION NO.		17	18	19	20	21	22	23	24	25	26	27	28	29	30	31	32
KEY AND CONNECTOR POSITIONS AND P.C. CARD TYPES	FILE A1	INF 043-1							LDR 053-1								
	KEY	X							8/16								
	FILE A2																
	KEY																
	FILE A3																
	KEY																

ALL CARDS ARE KEYED 8/12 UNLESS OTHERWISE NOTED.

DRAWN	CHECKED	TITLE	CODE IDENT NO.	DWG. NO.	REV
S. HORDESKI DATE 1.20.89	DATE	PCM BIT SYNCHRONIZER TOP ASSEMBLY MODEL 335A	20747	PL 356-0181-510 SHEET 2 OF	A

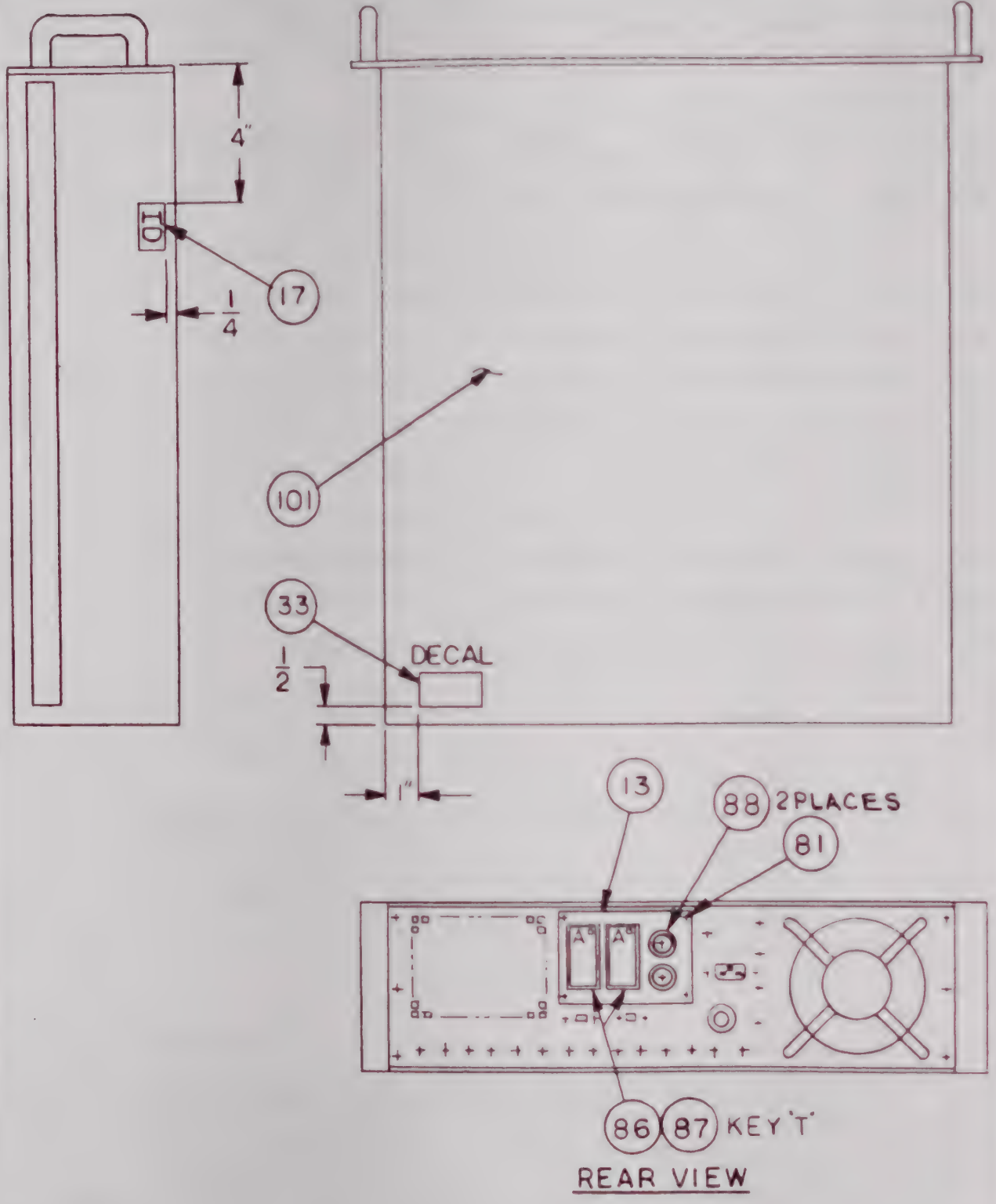

AYDIN MONITOR SYSTEMS

800-0155A

CODE IDENT NO.	DWG NO.	REV
20747	PL356-0181-510	A
	SHEET 3 OF 5	

PARTS LIST	DESIGN ACTIVITY IDENTIFICATION: AYDIN COMPUTER AND MONITOR DIVISION, HORSHAM, PA. 19044	CONTRACT NO. 6928	CAGE CODE 20747	PL356-0181-510	REV A
LIST TITLE 335-10-20-31		SUBCONTRACT NO.			SHEET NO. 4

FIND NO	QTY REQ	U/M	CAGE CODE	DOCUMENT NUMBER	PART OR IDENTIFYING NUMBER	NOMENCLATURE OR DESCRIPTION	NOTES
013	1	EA		207-0704-004	207-0704-004	PLATE CONN MTG	
017	1	EA	20747	124-013-001	124-013-001	NAMEPLATE SELF ADHES	
033	1	EA		216-0370-015	216-0370-015	DECAL CONN IDENT	
081	4	EA	96906	127-109-014	MS51957-14	SCR PAN HD 4-40X5\16	
086	2	EA	20747	108-101-010	108-101-010	CONNECTOR 34 POS MALE	J17 J18
087	68	EA	00779	108-101-108	108-101-118	CONN PIN CONT 26-24	
088	2	EA	14949	108-302-001	BJ-27	COAX BNC SOLDER PIN	J15 J19
089	1	EA	20747	354-0181-502	354-0181-502	335 ACC	
093	1	EA	20747	460-2058-501	460-2058-501	CARD ASSY LDR053-1	
100	1	EA	20747	460-1990-501	460-1990-501	CARD ASSY INF043-1	
101	1	EA	20747	356-0181-500	356-0181-500	MODEL 335A-STD	
				ID 353-0071		INSTALLATION DIAGRAM - RACK MTG	
				WL 730-2423		WIRE LIST - 16 BIT INTERFACE	
				AT 297-1180		ACCEPTANCE TEST PROCEDURE - MOD 335A PCM BIT SYNC	
				WL 730-2492		WIRE LIST - MD 335A RNRZ-L OUTPUT	

PL356-0181-510 A
SHEET 4

REVISIONS			
REV	DESCRIPTION	DATE	APPROVED
A	REV PER ECO 20104 PM	8-3-90	V. Polaky

		CONTRACT NO.	
		DRAWN S. HORDESKI	DATE 1-20-89
		CHECKED [signature]	1/20/89
		DRAFTING [signature]	1-23-89
	4952-6401	APPROVED [signature]	1/20/89
NEXT ASSY	USED ON	APPROVED M.E. [signature]	1/29/89
APPLICATION		APPROVED PROJECT [signature]	1/31/89

AYDIN COMPUTER AND MONITOR Division
700 DRESHER ROAD HORSHAM, PA 19044

PCM BIT SYNCHRONIZER
TOP ASSEMBLY
MODEL 335A-1Ø-2Ø-32

SIZE	CAGE CODE	DWG NO	REV
A	20747	PL356-0181-511	A

SCALE 1/4 SHEET 1 OF 5

800-0016E

800-0129 MONITOR SYSTEMS INC.

POSITION NO.		1	2	3	4	5	6	7	8	9	10	11	12	13	14	15	16
KEY AND CONNECTOR POSITIONS AND P.C. CARD TYPES	FILE A1																
	KEY																
	FILE A2																
	KEY																
	FILE A3																
	KEY																

POSITION NO.		17	18	19	20	21	22	23	24	25	26	27	28	29	30	31	32
KEY AND CONNECTOR POSITIONS AND P.C. CARD TYPES	FILE A1	INF 043-1															
	KEY	X															
	FILE A2																
	KEY																
	FILE A3																
	KEY																

ALL CARDS ARE KEYED 8/12 UNLESS OTHERWISE NOTED.

DRAWN S. HORDESKI DATE 1.20.89	CHECKED DATE	TITLE PCM BIT SYNCHRONIZER TOP ASSEMBLY MODEL 335A	CODE IDENT NO. 20747	DWG. NO. PL356-0181-511 SHEET 2 OF	REV A

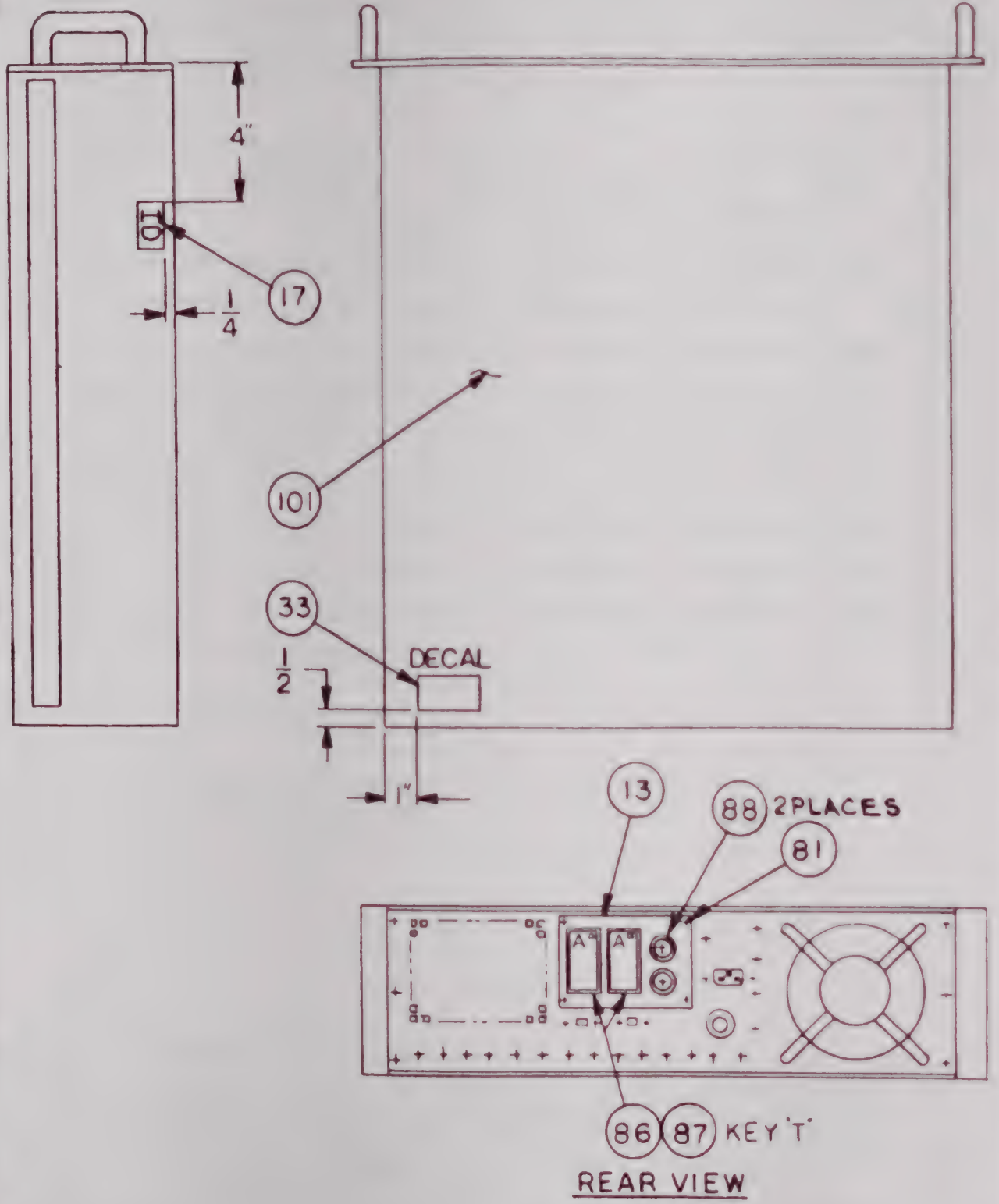

AYDIN MONITOR SYSTEMS

800-0555

CODE IDENT NO.	DWG NO.	REV
20747	PL356-0181-511	A
	SHEET 3 OF 5	

PARTS LIST	DESIGN ACTIVITY IDENTIFICATION	CONTRACT NO.	CAGE CODE		REV
	AYDIN COMPUTER AND MONITOR DIVISION HORSHAM, PA. 19044	6928	20747	PL356-0181-511	A

LIST TITLE	SUBCONTRACT NO.		SHEET NO.
T/A 335A-10-20-32			4

FIND NO	QTY REQ	U/M	CAGE CODE	DOCUMENT NUMBER	PART OR IDENTIFYING NUMBER	NOMENCLATURE OR DESCRIPTION	NOTES
013	1	EA		207-0704-004	207-0704-004	PLATE CONN MTG	
017	1	EA	20747	124-013-001	124-013-001	NAMEPLATE SELF ADHES	
033	1	EA		216-0370-011	216-0370-011	DECAL CONN IDENT	
081	4	EA	96906	127-109-014	MS51957-14	SCR PAN HD 4-40X5\16	
086	2	EA	20747	108-101-010	108-101-010	CONNECTOR 34 POS MALE	J17 J18
087	68	EA	00779	108-101-108	108-101-118	CONN PIN CONT 26-24	
088	2	EA	14949	108-302-001	BJ-27	COAX BNC SOLDER PIN	J15 J19
089	1	EA	20747	354-0181-502	354-0181-502	335 ACC	
100	1	EA	20747	460-1990-501	460-1990-501	CARD ASSY INF043-1	
101	1	EA	20747	356-0181-500	356-0181-500	MODEL 335A-STD	
				ID 353-0071		INSTALLATION DIAGRAM - RACK MTG	
				WL 730-2423		WIRE LIST - 16 BIT INTERFACE	
				AT 297-1180		ACCEPTANCE TEST PROCEDURE - MOD 335A PCM BIT SYNC	

PL356-0181-511 A
SHEET 4

REVISIONS			
REV	DESCRIPTION	DATE	APPROVED
A	REV PER ECO 20104 PM	8-3-90	V. Polak

		CONTRACT NO.	AYDIN COMPUTER AND MONITOR Division 700 DRESHER ROAD HORSHAM, PA 19044
		DRAWN S. HORDESKI DATE 1-20-89	PCM BIT SYNCHRONIZER TOP ASSEMBLY MODEL 335A-1Ø-21-31
		CHECKED [signature] 1/20/89	
		DRAFTING [signature] 1-23-89	
	4952-6401	APPROVED [signature] 1/20/89	
NEXT ASSY	USED ON	APPROVED M.E. [signature] 1/29/89	SIZE A · CAGE CODE 20747 · DWG NO PL356-0181-512 · REV A
APPLICATION		APPROVED PROJECT [signature] 1/31/89	SCALE ⅊ · SHEET 1 OF 5

800-0018E

800-0129 MONITOR SYSTEMS INC.

POSITION NO.		1	2	3	4	5	6	7	8	9	10	11	12	13	14	15	16
KEY AND CONNECTOR POSITIONS AND P.C. CARD TYPES	FILE A1								BSD 001-3								
	KEY								12/18								
	FILE A2																
	KEY																
	FILE A3																
	KEY																

POSITION NO.		17	18	19	20	21	22	23	24	25	26	27	28	29	30	31	32
KEY AND CONNECTOR POSITIONS AND P.C. CARD TYPES	FILE A1	INF 043-1					LDR 050-1		LDR 053-1								
	KEY	X					10/24		8/16								
	FILE A2																
	KEY																
	FILE A3																
	KEY																

ALL CARDS ARE KEYED 8/12 UNLESS OTHERWISE NOTED.

DRAWN	CHECKED	TITLE	CODE IDENT NO.	DWG. NO.	REV
S. HORDESKI		PCM BIT SYNCHRONIZER TOP ASSEMBLY MODEL 335A	20747	PL356-0181-512	A
DATE 1.20.89	DATE			SHEET 2 OF	

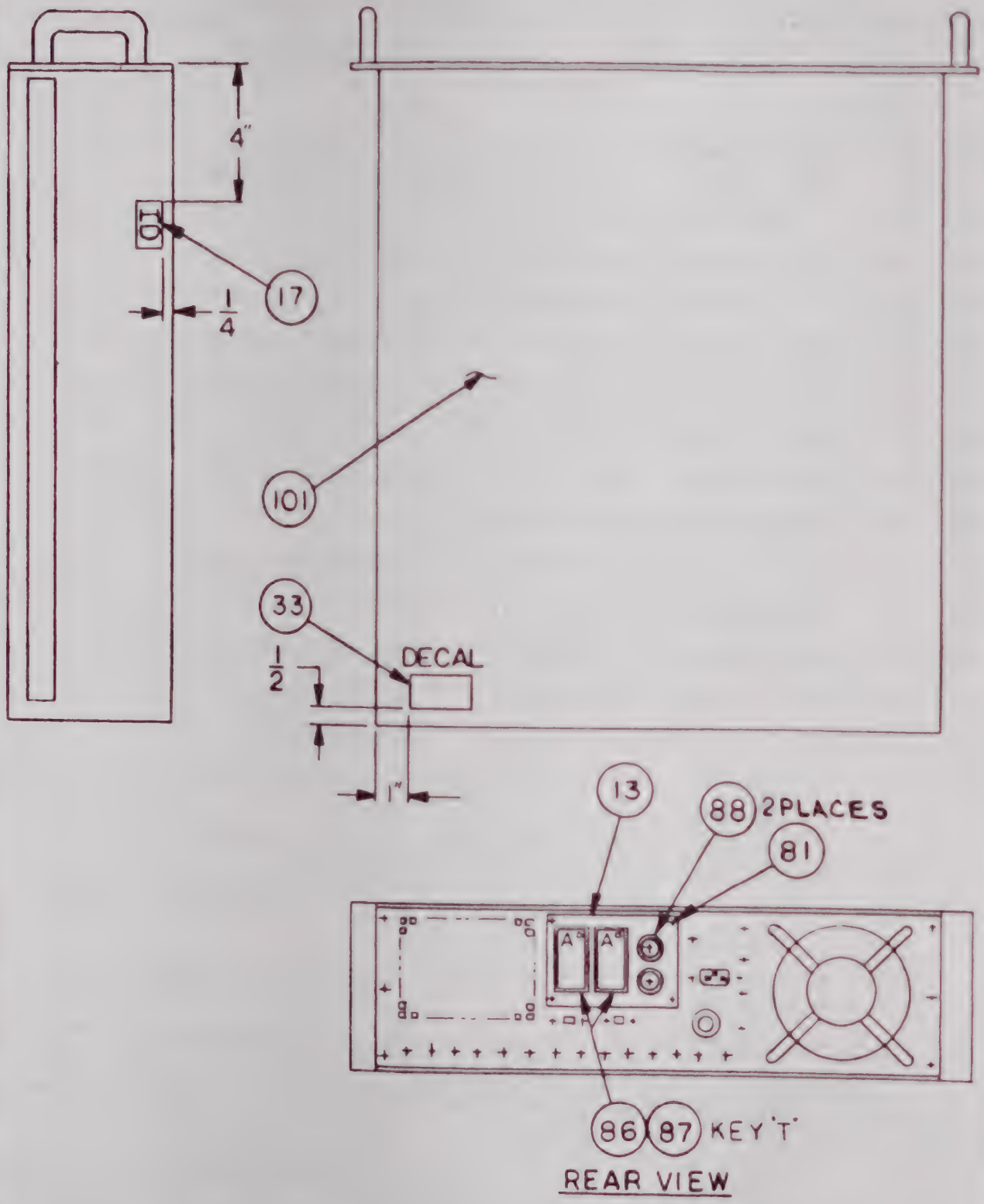

AYDIN MONITOR SYSTEMS

800-0158A

CODE IDENT NO.	DWG NO.	REV
20747	PL356-0181-512	A
	SHEET 3 OF 5	

PARTS LIST	DESIGN ACTIVITY IDENTIFICATION AYDIN COMPUTER AND MONITOR DIVISION HORSHAM, PA. 19044	CONTRACT NO. 6928	CAGE CODE 20747	PL356-0181-512	REV A

LIST TITLE T/A 335A-10-21-31	SUBCONTRACT NO.		SHEET NO. 4

FIND NO	QTY REQ	U/M	CAGE CODE	DOCUMENT NUMBER	PART OR IDENTIFYING NUMBER	NOMENCLATURE OR DESCRIPTION	NOTES
013	1	EA		207-0704-004	207-0704-004	PLATE CONN MTG	
017	1	EA	20747	124-013-001	124-013-001	NAMEPLATE SELF ADHES	
033	1	EA		216-0370-016	216-0370-016	DECAL CONN IDENT	
081	4	EA	96906	127-109-014	MS51957-14	SCR PAN HD 4-40X5\16	
086	2	EA	20747	108-101-010	108-101-010	CONNECTOR 34 POS MALE	J17 J18
087	68	EA	00779	108-101-108	108-101-118	CONN PIN CONT 26-24	
088	2	EA	14949	108-302-001	BJ-27	COAX BNC SOLDER PIN	J15 J19
089	1	EA	20747	354-0181-502	354-0181-502	335 ACC	
091	1	EA	20747	460-1982-503	460-1982-503	BSD001-3 SOFT BIT DEC	
092	1	EA	20747	460-1985-501	460-1985-501	LDR050-1	
093	1	EA	20747	460-2058-501	460-2058-501	CARD ASSY LDR053-1	
100	1	EA	20747	460-1990-501	460-1990-501	CARD ASSY INF043-1	
101	1	EA	20747	356-0181-500	356-0181-500	MODEL 335A-STD	
				ID 353-0071		INSTALLATION DIAGRAM - RACK MTG	
				WL 730-2423		WIRE LIST - 16 BIT INTERFACE	
				WL 730-2475		WIRE LIST - 335A SOFT BIT DEC	
				AT 297-1180		ACCEPTANCE TEST PROCEDURE - MOD 335A PCM BIT SYNC	
				WL 730-2492		WIRE LIST - MD 335A RNRZ-L OUTPUT	

PL356-0181-512 A
SHEET 4

REVISIONS				
REV	DESCRIPTION		DATE	APPROVED
A	REV PER ECO 20104	PM	8-3-90	

		CONTRACT NO.	
		DRAWN S. HORDESKI DATE 1-20-89	AYDIN COMPUTER AND MONITOR Division 700 DRESHER ROAD HORSHAM, PA 19044
		CHECKED 1-20/89	PCM BIT SYNCHRONIZER
		DRAFTING 1-23-89	TOP ASSEMBLY
	4952-6401	APPROVED 1-20/89	MODEL 335A-10-21-32
NEXT ASSY	USED ON	APPROVED M.E. 1/29/89	SIZE A | CAGE CODE 20747 | DWG NO PL356-0181-513 | REV A
APPLICATION		APPROVED PROJECT 1/31/89	SCALE NONE | SHEET 1 OF 5

800-0015E

800-0129 MONITOR SYSTEMS INC.

POSITION NO.		1	2	3	4	5	6	7	8	9	10	11	12	13	14	15	16
KEY AND CONNECTOR POSITIONS AND P.C. CARD TYPES	FILE A1								BSD 001-3								
	KEY								12/18								
	FILE A2																
	KEY																
	FILE A3																
	KEY																

POSITION NO.		17	18	19	20	21	22	23	24	25	26	27	28	29	30	31	32
KEY AND CONNECTOR POSITIONS AND P.C. CARD TYPES	FILE A1	INF 043-1					LDR 050-1										
	KEY	X					10/24										
	FILE A2																
	KEY																
	FILE A3																
	KEY																

ALL CARDS ARE KEYED 8/12 UNLESS OTHERWISE NOTED.

DRAWN	CHECKED	TITLE	CODE IDENT NO.	DWG. NO.	REV
S HORDESKI DATE 1.20.89	DATE	PCM BIT SYNCHRONIZER TOP ASSEMBLY MODEL 335A	20747	PL 356-0181-513 SHEET 2 OF	A

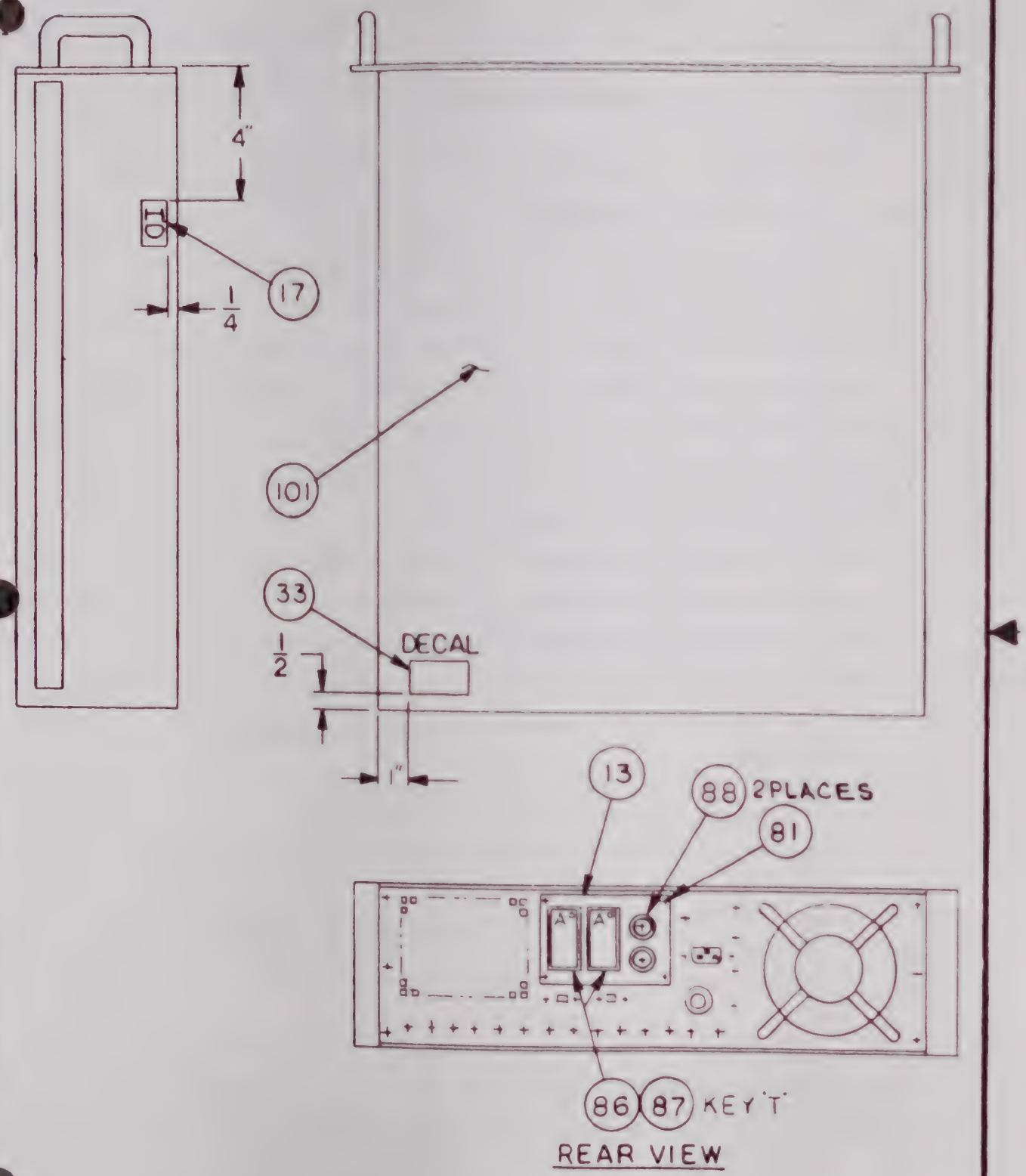

CODE IDENT NO.	DWG NO.	REV
20747	PL 356-0181-513	A
	SHEET 3 OF 5	

AYDIN MONITOR SYSTEMS

800-0133

PARTS LIST	DESIGN ACTIVITY IDENTIFICATION AYDIN COMPUTER AND MONITOR DIVISION HORSHAM, PA. 19044	CONTRACT NO. 6928	CAGE CODE 20747	PL356-0181-513	REV A

LIST TITLE T/A 335A-10-21-32	SUBCONTRACT NO.		SHEET NO. 4

FIND NO	QTY REQ	U/M	CAGE CODE	DOCUMENT NUMBER	PART OR IDENTIFYING NUMBER	NOMENCLATURE OR DESCRIPTION	NOTES
013	1	EA		207-0704-004	207-0704-004	PLATE CONN MTG	
017	1	EA	20747	124-013-001	124-013-001	NAMEPLATE SELF ADHES	
033	1	EA		216-0370-005	216-0370-005	DECAL CONN IDENT	
081	4	EA	96906	127-109-014	MS51957-14	SCR PAN HD 4-40X5\16	
086	2	EA	20747	108-101-010	108-101-010	CONNECTOR 34 POS MALE	J17 J18
087	58	EA	00779	108-101-108	108-101-118	CONN PIN CONT 26-24	
088	2	EA	14949	108-302-001	BJ-27	COAX BNC SOLDER PIN	J15 J19
089	1	EA	20747	354-0181-502	354-0181-502	335 ACC	
091	1	EA	20747	460-1982-503	460-1982-503	BSD001-3 SOFT BIT DEC	
092	1	EA	20747	460-1985-501	460-1985-501	LDR050-1	
100	1	EA	20747	460-1990-501	460-1990-501	CARD ASSY INF043-1	
101	1	EA	20747	356-0181-500	356-0181-500	MODEL 335A-STD	
				ID 353-0071		INSTALLATION DIAGRAM - RACK MTG	
				WL 730-2423		WIRE LIST - 16 BIT INTERFACE	
				WL 730-2475		WIRE LIST - 335A SOFT BIT DEC	
				AT 297-1180		ACCEPTANCE TEST PROCEDURE - MOD 335A PCM BIT SYNC	

PL356-0181-513 A
SHEET 4

REVISIONS			
REV	DESCRIPTION	DATE	APPROVED
A	REV PER ECO 20104 PM	5-3-90	

		CONTRACT NO.	
		DRAWN S. HORDESKI DATE 1-20-89	AYDIN COMPUTER AND MONITOR Division 700 DRESHER ROAD HORSHAM, PA 19044
		CHECKED 1/20/89	PCM BIT SYNCHRONIZER TOP ASSEMBLY MODEL 335A-10-22-30
		DRAFTING 1-23-89	
		APPROVED 1/20/89	
	4952-6401	APPROVED ME 1/29/89	
NEXT ASSY	USED ON	APPROVED PROJECT 1/31/89	
APPLICATION			

SIZE	CAGE CODE	DWG NO	REV
A	20747	PL356-0181-514	A

SCALE NA SHEET 1 OF 5

800-0018E

800-0129 MONITOR SYSTEMS INC.

POSITION NO.		1	2	3	4	5	6	7	8	9	10	11	12	13	14	15	16
KEY AND CONNECTOR POSITIONS AND P.C. CARD TYPES	FILE A1								BSD 001-2								
	KEY								12/18								
	FILE A2																
	KEY																
	FILE A3																
	KEY																

POSITION NO.		17	18	19	20	21	22	23	24	25	26	27	28	29	30	31	32
KEY AND CONNECTOR POSITIONS AND P.C. CARD TYPES	FILE A1	INF 043-1					LDR 050-1										
	KEY	X					10/24										
	FILE A2																
	KEY																
	FILE A3																
	KEY																

ALL CARDS ARE KEYED 8/12 UNLESS OTHERWISE NOTED.

DRAWN	CHECKED	TITLE	CODE IDENT NO.	DWG. NO.	REV
S. HORDESKI DATE 1.20.89	DATE	PCM BIT SYNCHRONIZER TOP ASSEMBLY MODEL 335A	20747	PL356-0181-514 SHEET 2 OF	A

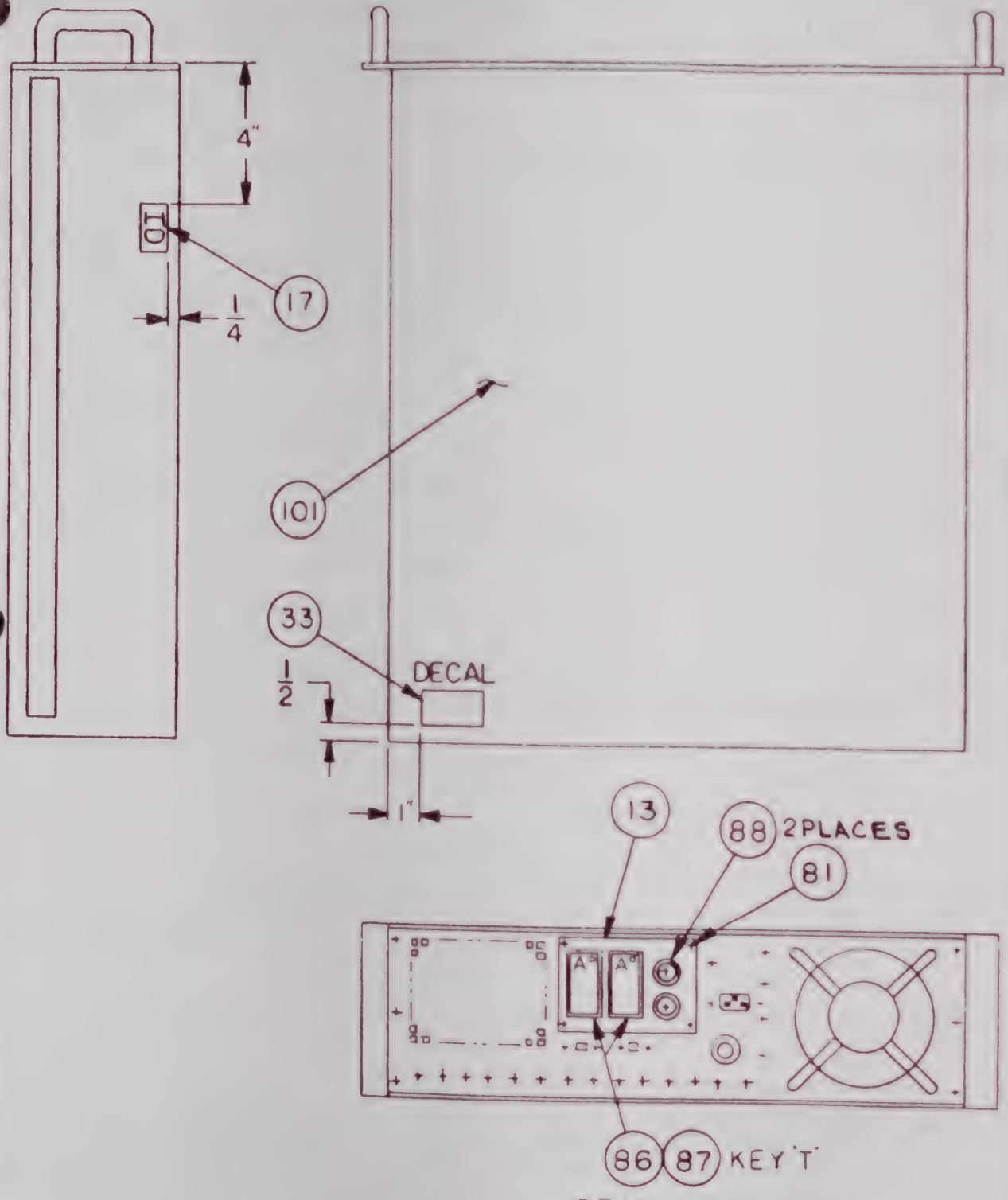

AYDIN MONITOR SYSTEMS

800-0135

CODE IDENT NO.	DWG NO.	REV
20747	PL356-0181-514	A
	SHEET 3 OF 5	

PARTS LIST	DESIGN ACTIVITY IDENTIFICATION: AYDIN COMPUTER AND MONITOR DIVISION, HORSHAM, PA. 19044	CONTRACT NO. 6928	CAGE CODE 20747	PL356-0181-514	REV A
LIST TITLE: T/A 335A-10-22-30		SUBCONTRACT NO.			SHEET NO. 4

FIND NO	QTY REQ	U/M	CAGE CODE	DOCUMENT NUMBER	PART OR IDENTIFYING NUMBER	NOMENCLATURE OR DESCRIPTION	NOTES
013	1	EA		207-0704-004	207-0704-004	PLATE CONN MTG	
017	1	EA	20747	124-013-001	124-013-001	NAMEPLATE SELF ADHES	
033	1	EA		216-0370-012	216-0370-012	DECAL CONN IDENT	
081	4	EA	96906	127-109-014	MS51957-14	SCR PAN HD 4-40X5\16	
086	2	EA	20747	108-101-010	108-101-010	CONNECTOR 34 POS MALE	J17 J18
087	68	EA	00779	108-101-108	108-101-118	CONN PIN CONT 26-24	
088	2	EA	14949	108-302-001	BJ-27	COAX BNC SOLDER PIN	J15 J19
089	1	EA	20747	354-0181-502	354-0181-502	335 ACC	
098	1	EA	20747	460-1985-501	460-1985-501	LDR050-1	
099	1	EA	20747	460-1982-502	460-1982-502	BSD001-2 DATA QUALITY	
100	1	EA	20747	460-1990-501	460-1990-501	CARD ASSY INF043-1	
101	1	EA	20747	356-0181-500	356-0181-500	MODEL 335A-STD	
				ID 353-0071		INSTALLATION DIAGRAM - RACK MTG	
				WL 730-2423		WIRE LIST - 16 BIT INTERFACE	
				AT 297-1180		ACCEPTANCE TEST PROCEDURE - MOD 335A PCM BIT SYNC	
				WL 730-2481		WIRE LIST - 335A DATA QUALITY	

PL356-0181-514 A
SHEET 4

REVISIONS			
REV	DESCRIPTION	DATE	APPROVED
A	REV FOR ECO 20104 PM	8 3 90	

		CONTRACT NO.	
		DRAWN S. HORDESKI DATE 1-20-89	AYDIN COMPUTER AND MONITOR Division 700 DRESHER ROAD HORSHAM, PA 19044
		CHECKED 1/20/89	PCM BIT SYNCHRONIZER TOP ASSEMBLY MODEL 335A-10-22-31
		DRAFTING 1-23-89	
		APPROVED - 1/20/89	
	4952-6401	APPROVED M.E. 1/29/89	SIZE A | CAGE CODE 20747 | DWG NO PL356-0181-515 | REV A
NEXT ASSY	USED ON	APPROVED PROJECT 1/31/89	
APPLICATION			SCALE NONE | SHEET 1 OF 5

800-0018E

800-0129 MONITOR SYSTEMS INC.

POSITION NO.		1	2	3	4	5	6	7	8	9	10	11	12	13	14	15	16
KEY AND CONNECTOR POSITIONS AND P.C. CARD TYPES	FILE A1								BSD 001-2								
	KEY								12/18								
	FILE A2																
	KEY																
	FILE A3																
	KEY																

POSITION NO.		17	18	19	20	21	22	23	24	25	26	27	28	29	30	31	32
KEY AND CONNECTOR POSITIONS AND P.C. CARD TYPES	FILE A1	INF 043-1					LDR 050-1		LDR 053-1								
	KEY	X					10/24		8/16								
	FILE A2																
	KEY																
	FILE A3																
	KEY																

ALL CARDS ARE KEYED 8/12 UNLESS OTHERWISE NOTED.

DRAWN	CHECKED	TITLE	CODE IDENT NO.	DWG. NO.	REV
S HORDESKI DATE 1.20.89	DATE	PCM BIT SYNCHRONIZER TOP ASSEMBLY MODEL 335A	20747	PL356-0181-515 SHEET 2 OF	A

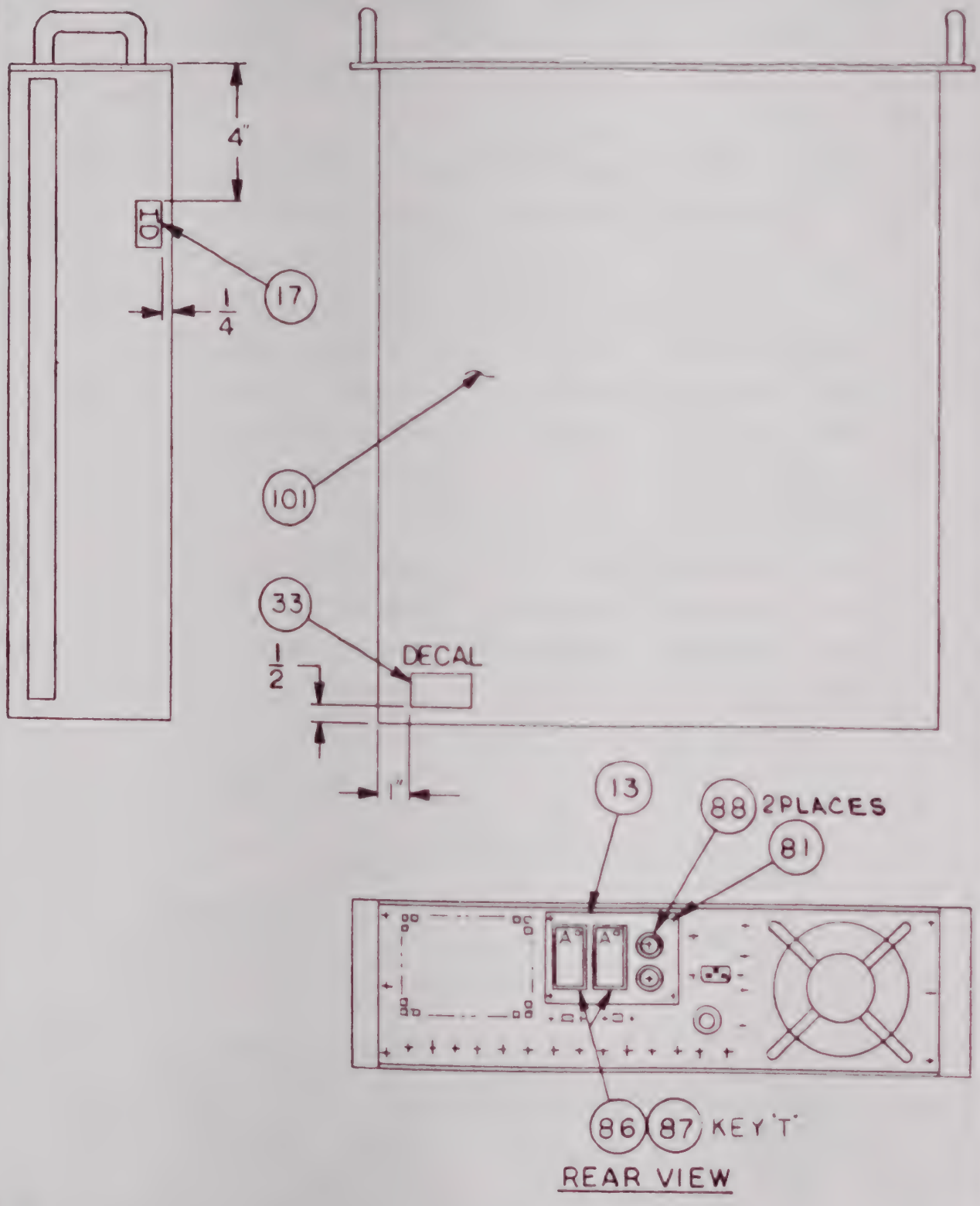

AYDIN MONITOR SYSTEMS

800-0151

CODE IDENT NO.	DWG NO.	REV
20747	PL 356-0181-515	A
	SHEET 3 OF 5	

PARTS LIST	DESIGN ACTIVITY IDENTIFICATION AYDIN COMPUTER AND MONITOR DIVISION HORSHAM, PA. 19044	CONTRACT NO. 6928	CAGE CODE 20747	PL356-0181-515	REV A

LIST TITLE T/A 335A-10-22-31	SUBCONTRACT NO.		SHEET NO. 4

FIND NO	QTY REQ	U/M	CAGE CODE	DOCUMENT NUMBER	PART OR IDENTIFYING NUMBER	NOMENCLATURE OR DESCRIPTION	NOTES
013	1	EA		207-0704-004	207-0704-004	PLATE CONN MTG	
017	1	EA	20747	124-013-001	124-013-001	NAMEPLATE SELF ADHES	
033	1	EA		216-0370-019	216-0370-019	DECAL CONN IDENT	
081	4	EA	96906	127-109-014	MS51957-14	SCR PAN HD 4-40X5\16	
086	2	EA	20747	108-101-010	108-101-010	CONNECTOR 34 POS MALE	J17 J18
087	68	EA	00779	108-101-108	108-101-118	CONN PIN CONT 26-24	
088	2	EA	14949	108-302-001	BJ-27	COAX BNC SOLDER PIN	J15 J19
089	1	EA	20747	354-0181-502	354-0181-502	335 ACC	
091	1	EA	20747	460-1982-502	460-1982-502	BSD001-2 DATA QUALITY	
092	1	EA	20747	460-1985-501	460-1985-501	LDR050-1	
093	1	EA	20747	460-2058-501	460-2058-501	CARD ASSY LDR053-1	
100	1	EA	20747	460-1990-501	460-1990-501	CARD ASSY INF043-1	
101	1	EA	20747	356-0181-500	356-0181-500	MODEL 335A-STD	
				ID 353-0071		INSTALLATION DIAGRAM - RACK MTG	
				WL 730-2423		WIRE LIST - 16 BIT INTERFACE	
				AT 297-1180		ACCEPTANCE TEST PROCEDURE - MOD 335A PCM BIT SYNC	
				WL 730-2481		WIRE LIST - 335A DATA QUALITY	
				WL 730-2492		WIRE LIST - MD 335A RNRZ-L OUTPUT	

PL356-0181-515 A
SHEET 4

REVISIONS			
REV	DESCRIPTION	DATE	APPROVED
A	REVISED ECO 20104 PM	8-3-89	

		CONTRACT NO.	
		DRAWN S. HORDESKI DATE 1-20-89	AYDIN COMPUTER AND MONITOR Division 700 DRESHER ROAD HORSHAM, PA 19044
		CHECKED 1- 1/20/89	PCM BIT SYNCHRONIZER
		DRAFTING 1-23-89	TOP ASSEMBLY
		APPROVED 1- 1/20/89	MODEL 335A-10-22-32
	4952-6401	APPROVED M.E 1/29/89	SIZE A / CAGE CODE 20747 / DWG NO PL356-0181-516 / REV A
NEXT ASSY	USED ON	APPROVED PROJECT 1/31/89	SCALE NONE / SHEET 1 OF 5
APPLICATION			

800-0018E

800-0129 MONITOR SYSTEMS INC.

POSITION NO.		1	2	3	4	5	6	7	8	9	10	11	12	13	14	15	16
KEY AND CONNECTOR POSITIONS AND P.C. CARD TYPES	FILE A1								BSD 001-2								
	KEY								12 / 18								
	FILE A2																
	KEY																
	FILE A3																
	KEY																

POSITION NO.		17	18	19	20	21	22	23	24	25	26	27	28	29	30	31	32
KEY AND CONNECTOR POSITIONS AND P.C. CARD TYPES	FILE A1	INF 043-1					LDR 050-1										
	KEY	X					10 / 24										
	FILE A2																
	KEY																
	FILE A3																
	KEY																

ALL CARDS ARE KEYED 8/12 UNLESS OTHERWISE NOTED.

DRAWN	CHECKED	TITLE	CODE IDENT NO.	DWG. NO.	REV
S HORDESKI		PCM BIT SYNCHRONIZER	20747	PL356-0181-516	A
DATE 1.20.89	DATE	TOP ASSEMBLY MODEL 335A		SHEET 2 OF	

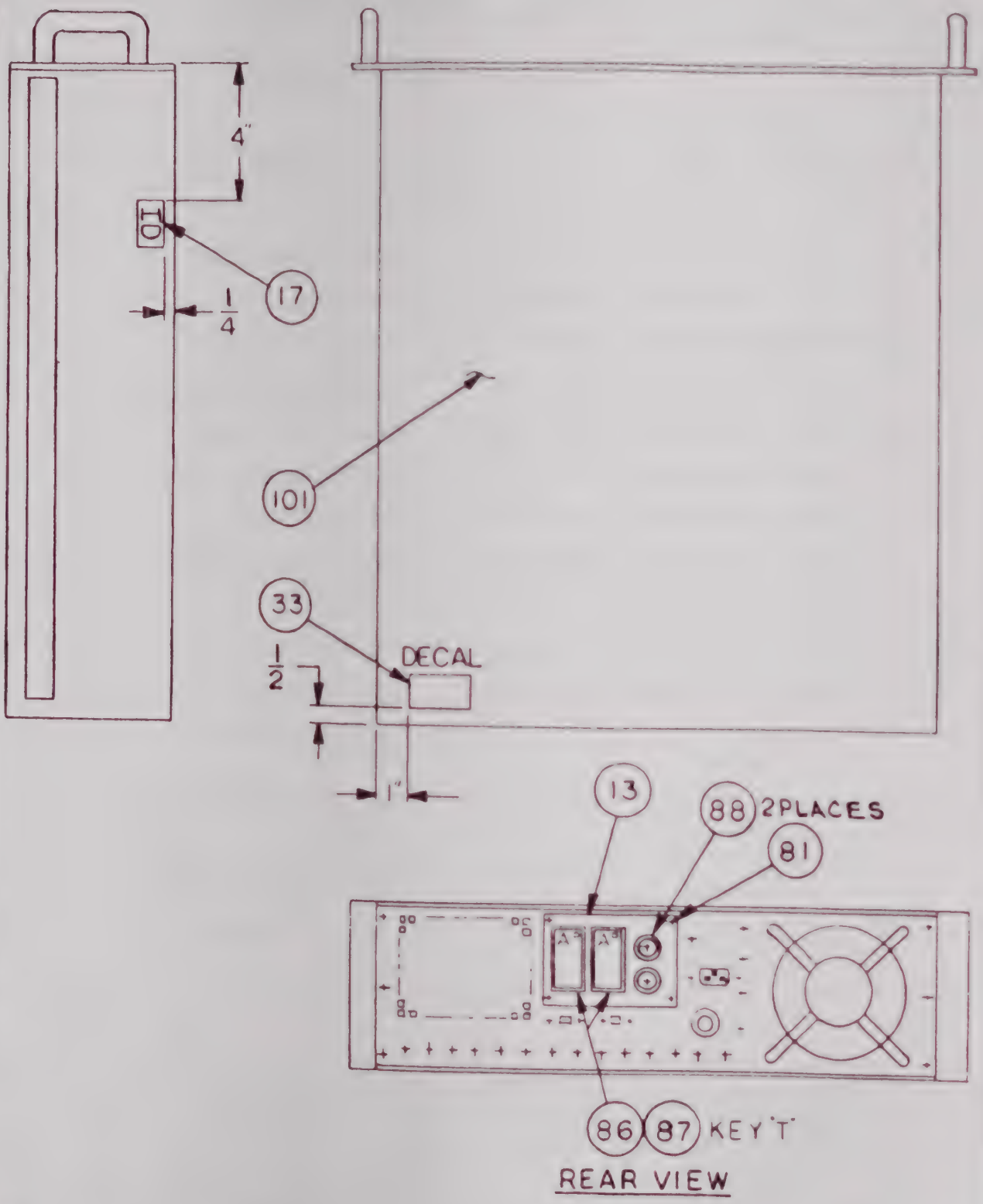

AYDIN MONITOR SYSTEMS

800-015

CODE IDENT NO.	DWG NO.	REV
20747	PL 356-0181-516	A
	SHEET 3 OF 5	

PARTS LIST	DESIGN ACTIVITY IDENTIFICATION AYDIN COMPUTER AND MONITOR DIVISION HORSHAM, PA. 19044	CONTRACT NO. 6928	CAGE CODE 20747	PL356-0181-516	REV A

LIST TITLE	SUBCONTRACT NO.	SHEET NO.
T/A 335A-10-22-32		4

FIND NO	QTY REQ	U/M	CAGE CODE	DOCUMENT NUMBER	PART OR IDENTIFYING NUMBER	NOMENCLATURE OR DESCRIPTION	NOTES
013	1	EA		207-0704-004	207-0704-004	PLATE CONN MTG	
017	1	EA	20747	124-013-001	124-013-001	NAMEPLATE SELF ADHES	
033	1	EA		216-0370-012	216-0370-012	DECAL CONN IDENT	
081	4	EA	96906	127-109-014	MS51957-14	SCR PAN HD 4-40X5\16	
086	2	EA	20747	108-101-010	108-101-010	CONNECTOR 34 POS MALE	J17 J18
087	68	EA	00779	108-101-108	108-101-118	CONN PIN CONT 26-24	
088	2	EA	14949	108-302-001	BJ-27	COAX BNC SOLDER PIN	J15 J19
089	1	EA	20747	354-0181-502	354-0181-502	335 ACC	
091	1	EA	20747	460-1982-502	460-1982-502	BSD001-2 DATA QUALITY	
092	1	EA	20747	460-1985-501	460-1985-501	LDR050-1	
100	1	EA	20747	460-1990-501	460-1990-501	CARD ASSY INF043-1	
101	1	EA	20747	356-0181-500	356-0181-500	MODEL 335A-STD	
				ID 353-0071		INSTALLATION DIAGRAM - RACK MTG	
				WL 730-2423		WIRE LIST - 16 BIT INTERFACE	
				PT 297-1180		ACCEPTANCE TEST PROCEDURE - MOD 335A PCM BIT SYNC	
				WL 730-2481		WIRE LIST - 335A DATA QUALITY	

PL356-0181-516 A
SHEET 4

REVISIONS			
REV	DESCRIPTION	DATE	APPROVED
A	[illegible] 20104 PM	8-3-90	[illegible]

		CONTRACT NO.	AYDIN COMPUTER AND MONITOR Division 700 DRESHER ROAD HORSHAM, PA 19044
		DRAWN S. HORDESKI DATE 1-20-89	PCM BIT SYNCHRONIZER TOP ASSEMBLY MODEL 335A-11-2Ø-31
		CHECKED [illegible] 1/20/89	
		DRAFTING [illegible] 1-23-89	
	4952-6401	APPROVED [illegible] 1/20/89	SIZE A · CAGE CODE 20747 · DWG NO PL356-0181-517 · REV A
NEXT ASSY	USED ON	APPROVED M.E. [illegible] 1/29/89	
APPLICATION		APPROVED PROJECT [illegible] 1/31/89	SCALE [illegible] · SHEET 1 OF 5

800-0016E

800-0129 MONITOR SYSTEMS INC.

POSITION NO.		1	2	3	4	5	6	7	8	9	10	11	12	13	14	15	16
KEY AND CONNECTOR POSITIONS AND P.C. CARD TYPES	FILE A1																
	KEY																
	FILE A2																
	KEY																
	FILE A3																
	KEY																

POSITION NO.		17	18	19	20	21	22	23	24	25	26	27	28	29	30	31	32
KEY AND CONNECTOR POSITIONS AND P.C. CARD TYPES	FILE A1	INF 043-1							LDR 053-1								
	KEY	X							8/16								
	FILE A2																
	KEY																
	FILE A3																
	KEY																

ALL CARDS ARE KEYED 8/12 UNLESS OTHERWISE NOTED.

DRAWN	CHECKED	TITLE	CODE IDENT NO.	DWG. NO.	REV
S. HORDESKI		PCM BIT SYNCHRONIZER	20747	PL356-0181-517	A
DATE 1.20.89	DATE	TOP ASSEMBLY MODEL 335A		SHEET 2 OF	

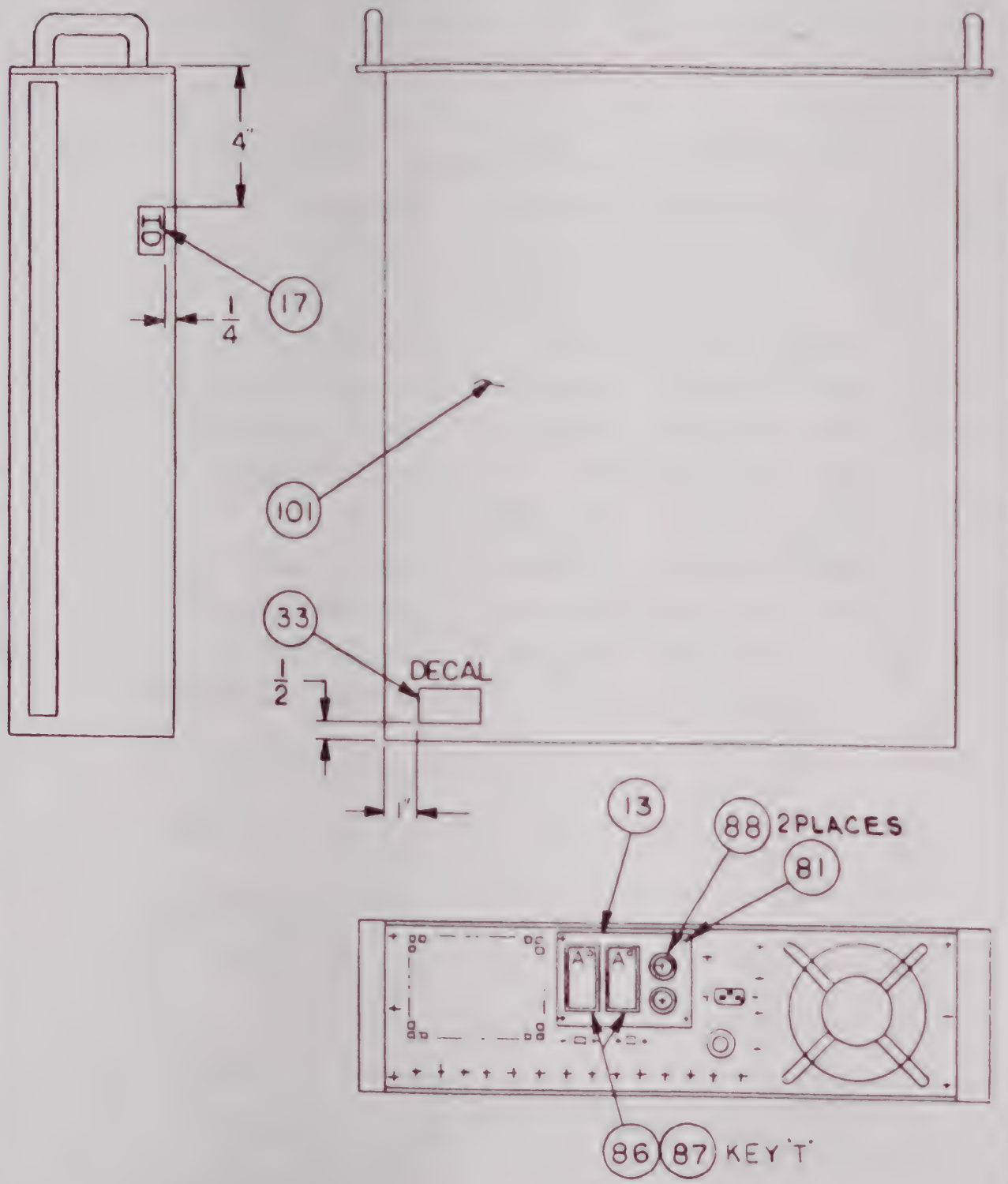

AYDIN MONITOR SYSTEMS

800-0153A

CODE IDENT NO.	DWG NO.	REV
20747	PL356-0181-517	A
	SHEET 3 OF 5	

PARTS LIST	DESIGN ACTIVITY IDENTIFICATION AYDIN COMPUTER AND MONITOR DIVISION HORSHAM, PA. 19044	CONTRACT NO. 6928	CAGE CODE 20747	PL356-0181-517	REV A

LIST TITLE T/A 335A-11-20-31	SUBCONTRACT NO.		SHEET NO. 4

FIND NO	QTY REQ	U/M	CAGE CODE	DOCUMENT NUMBER	PART OR IDENTIFYING NUMBER	NOMENCLATURE OR DESCRIPTION	NOTES
013	1	EA		207-0704-004	207-0704-004	PLATE CONN MTG	
017	1	EA	20747	124-013-001	124-013-001	NAMEPLATE SELF ADHES	
033	1	EA		216-0370-015	216-0370-015	DECAL CONN IDENT	
081	4	EA	96906	127-109-014	MS51957-14	SCR PAN HD 4-40X5\16	
086	2	EA	20747	108-101-010	108-101-010	CONNECTOR 34 POS MALE	J17 J18
087	68	EA	00779	108-101-108	108-101-118	CONN PIN CONT 26-24	
088	2	EA	14949	108-302-001	BJ-27	COAX BNC SOLDER PIN	J15 J19
089	1	EA	20747	354-0181-502	354-0181-502	335 ACC	
093	1	EA	20747	460-2058-501	460-2058-501	CARD ASSY LDR053-1	
100	1	EA	20747	460-1990-501	460-1990-501	CARD ASSY INF043-1	
101	1	EA	20747	356-0181-500	356-0181-500	MODEL 335A-STD	
				AT 297-0477-504		ACCEPTANCE TEST PROCEDURE - MODEL 335	
				ID 353-0071		INSTALLATION DIAGRAM - RACK MTG	
				WL 730-2421		WIRE LIST - 16 BIT 1126B INTFACE	
				AT 297-1180		ACCEPTANCE TEST PROCEDURE - MOD 335A PCM BIT SYNC	
				WL 730-2492		WIRE LIST - MD 335A RNRZ-L OUTPUT	

PL356-0181-517 A
SHEET 4

REVISIONS			
REV	DESCRIPTION	DATE	APPROVED
A	REV PER ECO 20104 PM	8-3-90	V. [illegible]

		CONTRACT NO.	AYDIN COMPUTER AND MONITOR Division 700 DRESHER ROAD HORSHAM PA 19044
		DRAWN S. HORDESKI DATE 1-20-89	PCM BIT SYNCHRONIZER TOP ASSEMBLY MODEL 335A-11-2Ø-32
		CHECKED [illegible] 1/20/89	
		DRAFTING [illegible] 1-23-89	
	4952-6401	APPROVED [illegible] 1/20/89	
NEXT ASSY	USED ON	APPROVED M.E. [illegible] 1/29/89	SIZE A · CAGE CODE 20747 · DWG NO PL356-0181-518 · REV A
APPLICATION		APPROVED PROJECT [illegible] 1/31/89	SCALE 1/4 · SHEET 1 OF 5

800-0015E

800-0129 MONITOR SYSTEMS INC.

POSITION NO.		1	2	3	4	5	6	7	8	9	10	11	12	13	14	15	16
KEY AND CONNECTOR POSITIONS AND P.C. CARD TYPES	FILE A1																
	KEY	/	/	/	/	/	/	/	/	/	/	/	/	/	/	/	/
	FILE A2																
	KEY	/	/	/	/	/	/	/	/	/	/	/	/	/	/	/	/
	FILE A3																
	KEY	/	/	/	/	/	/	/	/	/	/	/	/	/	/	/	/

POSITION NO.		17	18	19	20	21	22	23	24	25	26	27	28	29	30	31	32
KEY AND CONNECTOR POSITIONS AND P.C. CARD TYPES	FILE A1	INF 043-1															
	KEY	X	/	/	/	/	/	/	/	/	/	/	/	/	/	/	/
	FILE A2																
	KEY	/	/	/	/	/	/	/	/	/	/	/	/	/	/	/	/
	FILE A3																
	KEY	/	/	/	/	/	/	/	/	/	/	/	/	/	/	/	/

ALL CARDS ARE KEYED 8/12 UNLESS OTHERWISE NOTED.

DRAWN	CHECKED	TITLE	CODE IDENT NO.	DWG. NO.	REV
S. HORDESKI		PCM BIT SYNCHRONIZER	20747	PL356-0181-518	A
DATE 1-20-89	DATE	TOP ASSEMBLY MODEL 335A		SHEET 2 OF	

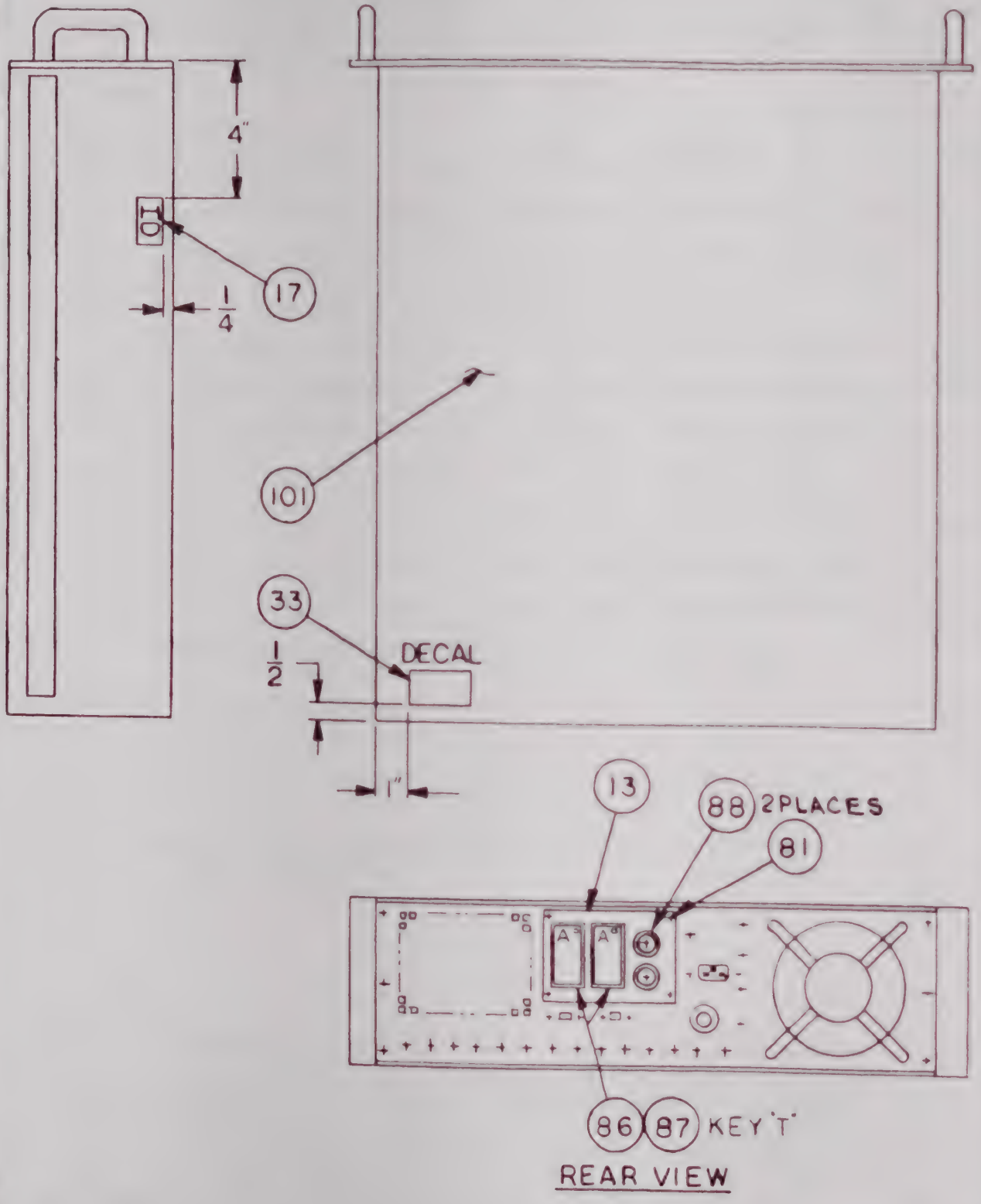

AYDIN MONITOR SYSTEMS

00-0151

CODE IDENT NO.	DWG NO.	REV
20747	PL356-0181-518	A
	SHEET 3 OF 5	

PARTS LIST	DESIGN ACTIVITY IDENTIFICATION AYDIN COMPUTER AND MONITOR DIVISION HORSHAM, PA. 19044	CONTRACT NO. 6928	CAGE CODE 20747	PL356-0181-518	REV A

LIST TITLE T/A 335A-11-20-32	SUBCONTRACT NO.		SHEET NO. 4

FIND NO	QTY REQ	U/M	CAGE CODE	DOCUMENT NUMBER	PART OR IDENTIFYING NUMBER	NOMENCLATURE OR DESCRIPTION	NOTES
013	1	EA		207-0704-004	207-0704-004	PLATE CONN MTG	
017	1	EA	20747	124-013-001	124-013-001	NAMEPLATE SELF ADHES	
033	1	EA		216-0370-011	216-0370-011	DECAL CONN IDENT	
081	4	EA	96906	127-109-014	MS51957-14	SCR PAN HD 4-40X5\16	
086	2	EA	20747	108-101-010	108-101-010	CONNECTOR 34 POS MALE	J17 J18
087	68	EA	00779	108-101-108	108-101-118	CONN PIN CONT 26-24	
088	2	EA	14949	108-302-001	BJ-27	COAX BNC SOLDER PIN	J15 J19
089	1	EA	20747	354-0181-502	354-0181-502	335 ACC	
100	1	EA	20747	460-1990-501	460-1990-501	CARD ASSY INF043-1	
101	1	EA	20747	356-0181-500	356-0181-500	MODEL 335A-STD	
				AT 297-0477-504		ACCEPTANCE TEST PROCEDURE - MODEL 335	
				ID 353-0071		INSTALLATION DIAGRAM - RACK MTG	
				WL 730-2421		WIRE LIST - 16 BIT 1126B INTFACE	
				AT 297-1180		ACCEPTANCE TEST PROCEDURE - MOD 335A PCM BIT SYNC	

PL356-0181-518 A
SHEET 4

REVISIONS			
REV	DESCRIPTION	DATE	APPROVED
A	REV PER ECO 20104 PM	9-3-90	V. Polsky

		CONTRACT NO.	
		DRAWN S. HORDESKI	DATE 1-20-89
		CHECKED [signature]	1/20/89
		DRAFTER [signature]	1-23-89
	4952-6401	APPROVED [signature]	1/20/89
NEXT ASSY	USED ON	APPROVED M.E. [signature]	1/29/89
APPLICATION		APPROVED PROJECT [signature]	1/31/89

AYDIN COMPUTER AND MONITOR Division
700 DRESHER ROAD HORSHAM, PA 19044

PCM BIT SYNCHRONIZER
TOP ASSEMBLY
MODEL 335A-11-21-3Ø

SIZE	CAGE CODE	DWG NO	REV
A	20747	PL356-0181-519	A

SCALE 2/1 SHEET 1 OF 5

800-0015E

800-0129 MONITOR SYSTEMS INC.

POSITION NO.		1	2	3	4	5	6	7	8	9	10	11	12	13	14	15	16
KEY AND CONNECTOR POSITIONS AND P.C. CARD TYPES	FILE A1								BSD 001-3								
	KEY								12/18								
	FILE A2																
	KEY																
	FILE A3																
	KEY																

POSITION NO.		17	18	19	20	21	22	23	24	25	26	27	28	29	30	31	32
KEY AND CONNECTOR POSITIONS AND P.C. CARD TYPES	FILE A1	INF 043-1					LDR 050-1										
	KEY	X					10/24										
	FILE A2																
	KEY																
	FILE A3																
	KEY																

ALL CARDS ARE KEYED 8/12 UNLESS OTHERWISE NOTED.

DRAWN	CHECKED	TITLE	CODE IDENT NO.	DWG. NO.	REV
S. HORDESKI DATE 1.20.89	DATE	PCM BIT SYNCHRONIZER TOP ASSEMBLY MODEL 335A	20747	PL 356-0181-519 SHEET 2 OF	A

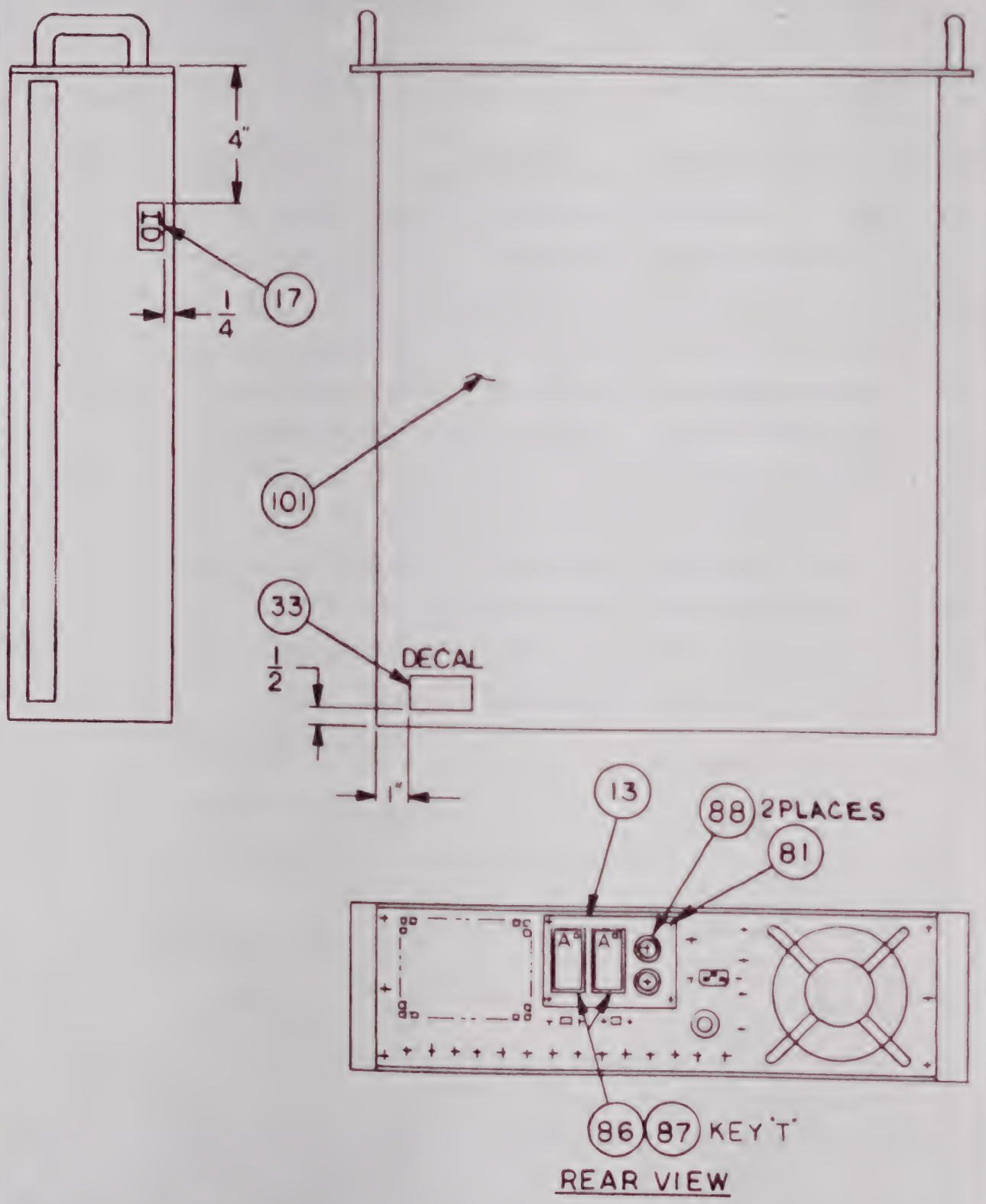

AYDIN MONITOR SYSTEMS

80-0158

CODE IDENT NO.	DWG NO.	REV
20747	PL356-0181-519	A
	SHEET 3 OF 5	

PARTS LIST	DESIGN ACTIVITY IDENTIFICATION: AYDIN COMPUTER AND MONITOR DIVISION, HORSHAM, PA. 19044	CONTRACT NO. 6928	CAGE CODE 20747	PL356-0181-519	REV A
LIST TITLE: T/A 335A-11-21-30		SUBCONTRACT NO.			SHEET NO. 4

FIND NO	QTY REQ	U/M	CAGE CODE	DOCUMENT NUMBER	PART OR IDENTIFYING NUMBER	NOMENCLATURE OR DESCRIPTION	NOTES
013	1	EA		207-0704-004	207-0704-004	PLATE CONN MTG	
017	1	EA	20747	124-013-001	124-013-001	NAMEPLATE SELF ADHES	
033	1	EA		216-0370-005	216-0370-005	DECAL CONN IDENT	
081	4	EA	96906	127-109-014	MS51957-14	SCR PAN HD 4-40X5\16	
086	2	EA	20747	108-101-010	108-101-010	CONNECTOR 34 POS MALE	J17 J18
087	68	EA	00779	108-101-108	108-101-118	CONN PIN CONT 26-24	
088	2	EA	14949	108-302-001	BJ-27	COAX BNC SOLDER PIN	J15 J19
089	1	EA	20747	354-0181-502	354-0181-502	335 ACC	
091	1	EA	20747	460-1982-503	460-1982-503	BSD001-3 SOFT BIT DEC	
092	1	EA	20747	460-1985-501	460-1985-501	LDR050-1	
100	1	EA	20747	460-1990-501	460-1990-501	CARD ASSY INF043-1	
101	1	EA	20747	356-0181-500	356-0181-500	MODEL 335A-STD	
				AT 297-0477-504		ACCEPTANCE TEST PROCEDURE - MODEL 335	
				ID 353-0071		INSTALLATION DIAGRAM - RACK MTG	
				WL 730-2421		WIRE LIST - 16 BIT 1126B INTFACE	
				AT 297-1180		ACCEPTANCE TEST PROCEDURE - MOD 335A PCM BIT SYNC	
				WL 730-2492		WIRE LIST - MD 335A RNRZ-L OUTPUT	

REVISIONS			
REV	DESCRIPTION	DATE	APPROVED
A	REV PER ECO 20104 PM1	8-3-90	V Polak

		CONTRACT NO.	
		DRAWN S. HORDESKI DATE 1-20-89	AYDIN COMPUTER AND MONITOR Division 700 DRESHER ROAD HORSHAM PA 19044
		CHECKED 1/20/89	PCM BIT SYNCHRONIZER TOP ASSEMBLY MODEL 335A-11-21-31
		DRAFTING L Stucker 1-23-89	
	4952-6401	APPROVED 1/20/89	
NEXT ASSY	USED ON	APPROVED M.E. 1/29/89	SIZE A / CAGE CODE 20747 / DWG NO PL356-0181-520 / REV A
APPLICATION		APPROVED PROJECT 1/31/89	SCALE NONE / SHEET 1 OF 5

800-0018E

800-0129 MONITOR SYSTEMS INC.

POSITION NO.		1	2	3	4	5	6	7	8	9	10	11	12	13	14	15	16
KEY AND CONNECTOR POSITIONS AND P.C. CARD TYPES	FILE A1								BSD 001-3								
	KEY								12/18								
	FILE A2																
	KEY																
	FILE A3																
	KEY																

POSITION NO.		17	18	19	20	21	22	23	24	25	26	27	28	29	30	31	32
KEY AND CONNECTOR POSITIONS AND P.C. CARD TYPES	FILE A1	INF 043-1					LDR 050-1		LDR 053-1								
	KEY	X					10/24		8/16								
	FILE A2																
	KEY																
	FILE A3																
	KEY																

ALL CARDS ARE KEYED 8/12 UNLESS OTHERWISE NOTED.

DRAWN	CHECKED	TITLE	CODE IDENT NO.	DWG. NO.	REV
S. HORDESKI		PCM BIT SYNCHRONIZER TOP ASSEMBLY MODEL 335A	20747	PL356-0181-520	A
DATE 1.20.89	DATE			SHEET 2 OF	

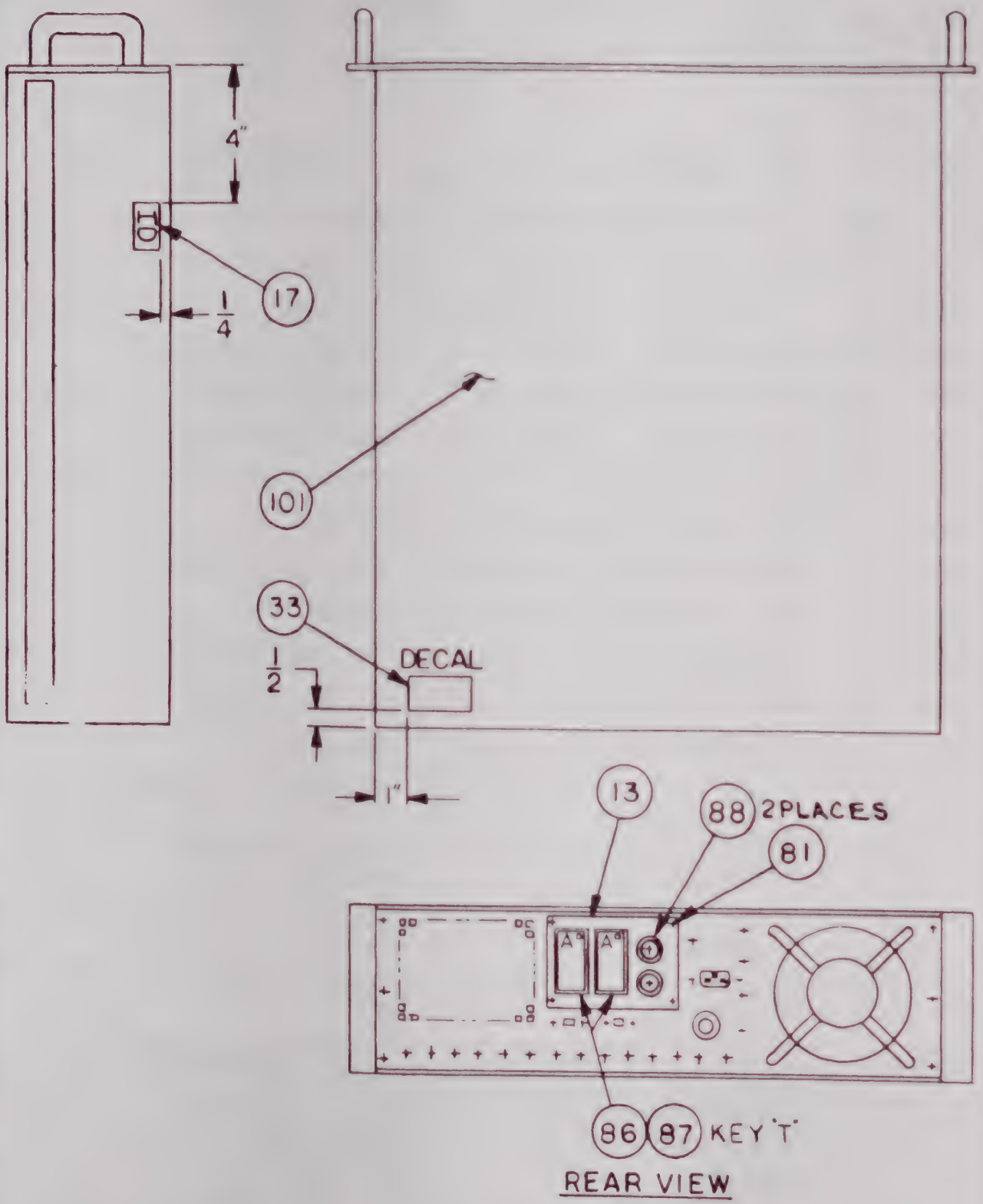

AYDIN MONITOR SYSTEMS

30-0158A

CODE IDENT NO.	DWG NO.	REV
20747	PL356-0181-520	A
	SHEET 3 OF 5	

PARTS LIST	DESIGN ACTIVITY IDENTIFICATION AYDIN COMPUTER AND MONITOR DIVISION HORSHAM, PA. 19044	CONTRACT NO. 6928	CAGE CODE 20747	PL356-0181-520	REV A

LIST TITLE T/A 335A-11-21-31	SUBCONTRACT NO.		SHEET NO. 4

FIND NO	QTY REQ	U/M	CAGE CODE	DOCUMENT NUMBER	PART OR IDENTIFYING NUMBER	NOMENCLATURE OR DESCRIPTION	NOTES
013	1	EA		207-0704-004	207-0704-004	PLATE CONN MTG	
017	1	EA	20747	124-013-001	124-013-001	NAMEPLATE SELF ADHES	
033	1	EA		216-0370-016	216-0370-016	DECAL CONN IDENT	
081	4	EA	96906	127-109-014	MS51957-14	SCR PAN HD 4-40X5\16	
086	2	EA	20747	108-101-010	108-101-010	CONNECTOR 34 POS MALE	J17 J18
087	68	EA	00779	108-101-108	108-101-118	CONN PIN CONT 26-24	
088	2	EA	14949	108-302-001	BJ-27	COAX BNC SOLDER PIN	J15 J19
089	1	EA	20747	354-0181-502	354-0181-502	335 ACC	
091	1	EA	20747	460-1982-503	460-1982-503	BSD001-3 SOFT BIT DEC	
092	1	EA	20747	460-1985-501	460-1985-501	LDR050-1	
093	1	EA	20747	460-2058-501	460-2058-501	CARD ASSY LDR053-1	
100	1	EA	20747	460-1990-501	460-1990-501	CARD ASSY INF043-1	
101	1	EA	20747	356-0181-500	356-0181-500	MODEL 335A-STD	
				AT 297-0477-504		ACCEPTANCE TEST PROCEDURE - MODEL 335	
				ID 353-0071		INSTALLATION DIAGRAM - RACK MTG	
				WL 730-2421		WIRE LIST - 16 BIT 1126B INTFACE	
				WL 730-2475		WIRE LIST - 335A SOFT BIT DEC	
				AT 297-1180		ACCEPTANCE TEST PROCEDURE - MOD 335A PCM BIT SYNC	
				WL 730-2492		WIRE LIST - MD 335A RNRZ-L OUTPUT	

PL356-0181-520 A
SHEET 4

REVISIONS			
REV	DESCRIPTION	DATE	APPROVED
A	REV PER ECO 20105 PM	8-3-90	V. Polak

		CONTRACT NO.
		DRAWN S. HORDESKI DATE 1-20-89
		CHECKED [signature] 1/20/89
		DRAFTING [signature] 1-23-89
		APPROVED [signature] 1/20/89
	4952-6401	APPROVED M.E. [signature] 1/29/89
NEXT ASSY	USED ON	APPROVED PROJECT [signature] 1/31/89
APPLICATION		

AYDIN COMPUTER AND MONITOR Division
700 DRESHER ROAD HORSHAM, PA 19044

PCM BIT SYNCHRONIZER
TOP ASSEMBLY
MODEL 335A-11-21-32

SIZE	CAGE CODE	DWG NO	REV
A	20747	PL356-0181-521	A
SCALE		SHEET 1 OF 5	

800-0018E

800-0129 MONITOR SYSTEMS INC.

POSITION NO.		1	2	3	4	5	6	7	8	9	10	11	12	13	14	15	16
KEY AND CONNECTOR POSITIONS AND P.C. CARD TYPES	FILE A1								BSD 001-3								
	KEY								12/18								
	FILE A2																
	KEY																
	FILE A3																
	KEY																

POSITION NO.		17	18	19	20	21	22	23	24	25	26	27	28	29	30	31	32
KEY AND CONNECTOR POSITIONS AND P.C. CARD TYPES	FILE A1	INF 043-1					LDR 050-1										
	KEY	X					10/24										
	FILE A2																
	KEY																
	FILE A3																
	KEY																

ALL CARDS ARE KEYED 8/12 UNLESS OTHERWISE NOTED.

DRAWN	CHECKED	TITLE	CODE IDENT NO.	DWG. NO.	REV
S. HORDESKI DATE 1.20.89	DATE	PCM BIT SYNCHRONIZER TOP ASSEMBLY MODEL 335A	20747	PL356-0181-521 SHEET 2 OF	A

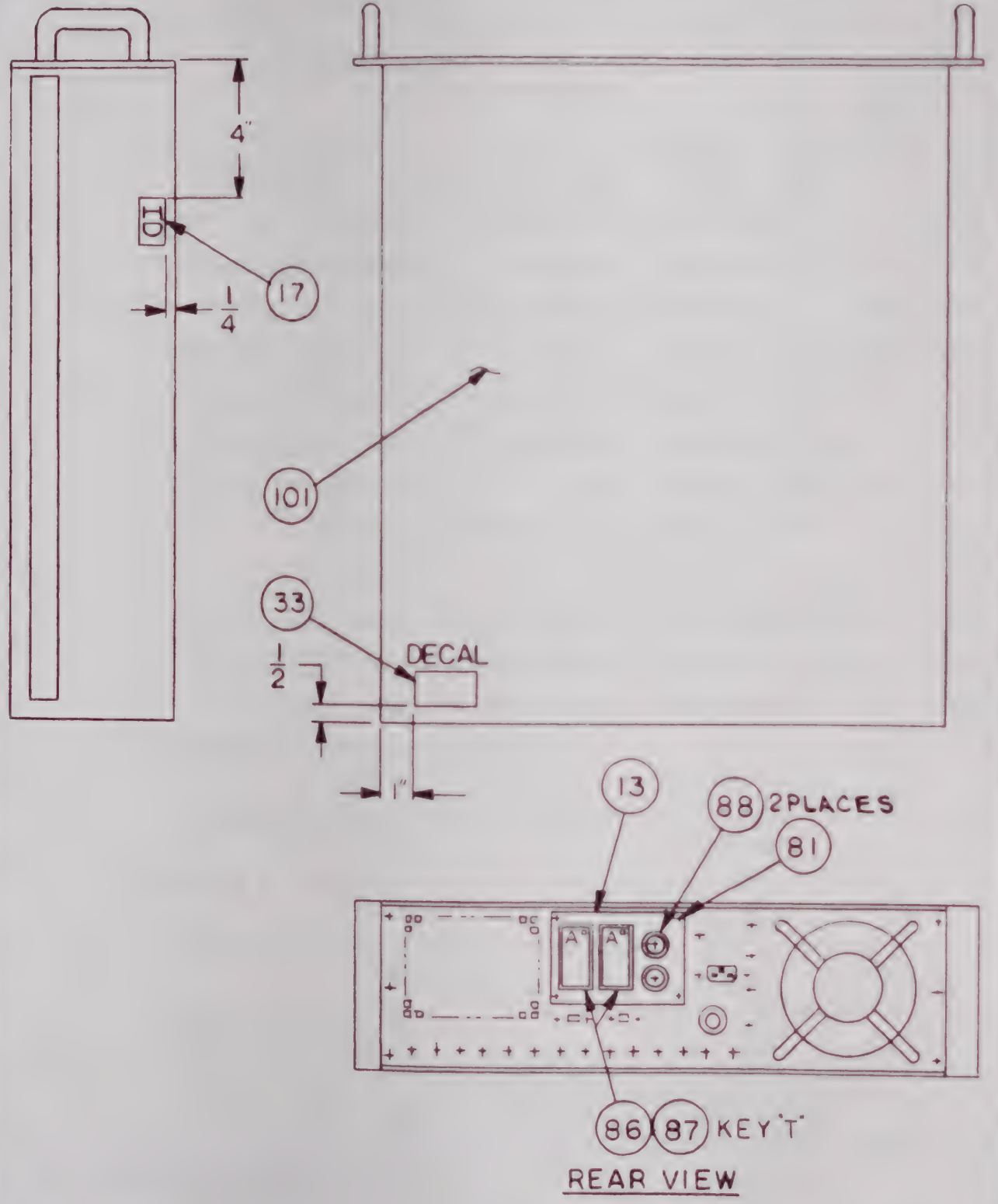

AYDIN MONITOR SYSTEMS

800-0155

CODE IDENT NO.	DWG NO.	REV
20747	PL356-0181-521	A
	SHEET 3 OF 5	

PARTS LIST	DESIGN ACTIVITY IDENTIFICATION AYDIN COMPUTER AND MONITOR DIVISION HORSHAM, PA. 19044	CONTRACT NO. 6928	CAGE CODE 20747	PL356-0181-521	REV A

LIST TITLE T/A 335A-11-21-32	SUBCONTRACT NO.		SHEET NO. 4

FIND NO	QTY REQ	U/M	CAGE CODE	DOCUMENT NUMBER	PART OR IDENTIFYING NUMBER	NOMENCLATURE OR DESCRIPTION	NOTES
013	1	EA		207-0704-004	207-0704-004	PLATE CONN MTG	
017	1	EA	20747	124-013-001	124-013-001	NAMEPLATE SELF ADHES	
033	1	EA		216-0370-005	216-0370-005	DECAL CONN IDENT	
081	4	EA	96906	127-109-014	MS51957-14	SCR PAN HD 4-40X5\16	
086	2	EA	20747	108-101-010	108-101-010	CONNECTOR 34 POS MALE	J17 J18
087	68	EA	00779	108-101-108	108-101-118	CONN PIN CONT 26-24	
088	2	EA	14949	108-302-001	BJ-27	COAX BNC SOLDER PIN	J15 J19
089	1	EA	20747	354-0181-502	354-0181-502	335 ACC	
098	1	EA	20747	460-1985-501	460-1985-501	LDR050-1	
099	1	EA	20747	460-1982-503	460-1982-503	BSD001-3 SOFT BIT DEC	
100	1	EA	20747	460-1990-501	460-1990-501	CARD ASSY INF043-1	
101	1	EA	20747	356-0181-500	356-0181-500	MODEL 335A-STD	
				AT 297-0477-504		ACCEPTANCE TEST PROCEDURE - MODEL 335	
				ID 353-0071		INSTALLATION DIAGRAM - RACK MTG	
				WL 730-2421		WIRE LIST - 16 BIT 1126B INTFACE	
				WL 730-2475		WIRE LIST - 335A SOFT BIT DEC	
				AT 297-1180		ACCEPTANCE TEST PROCEDURE - MOD 335A PCM BIT SYNC	

PL356-0181-521 A
SHEET 4

REVISIONS			
REV	DESCRIPTION	DATE	APPROVED
A	REV PER ECO 20105 PM	8-3-90	V. Polsky

		CONTRACT NO.	AYDIN COMPUTER AND MONITOR Division 700 DRESHER ROAD HORSHAM PA 19044
		DRAWN S. HORDESKI DATE 1-20-89	PCM BIT SYNCHRONIZER TOP ASSEMBLY MODEL 335A-11-22-3Ø
		CHECKED [signature] 1/20/89	
		DRAFTING [signature] 1-23-89	
	4952-6401	APPROVED [signature] 1/20/89	SIZE A · CAGE CODE 20747 · DWG NO PL356-0181-522 · REV A
NEXT ASSY	USED ON	APPROVED M.E. [signature] 1/29/89	
APPLICATION		APPROVED PROJECT [signature] 1/31/89	SCALE 2/1 · SHEET 1 OF 5

800-0018E

800-0129 MONITOR SYSTEMS INC.

POSITION NO.		1	2	3	4	5	6	7	8	9	10	11	12	13	14	15	16
KEY AND CONNECTOR POSITIONS AND P.C. CARD TYPES	FILE A1								BSD 001-2								
	KEY								12 / 18								
	FILE A2																
	KEY																
	FILE A3																
	KEY																

POSITION NO.		17	18	19	20	21	22	23	24	25	26	27	28	29	30	31	32
KEY AND CONNECTOR POSITIONS AND P.C. CARD TYPES	FILE A1	INF 043-1					LDR 050-1										
	KEY	X					10 / 24										
	FILE A2																
	KEY																
	FILE A3																
	KEY																

ALL CARDS ARE KEYED 8/12 UNLESS OTHERWISE NOTED.

DRAWN	CHECKED	TITLE	CODE IDENT NO.	DWG. NO.	REV
S. HORDESKI DATE 1.20.89	DATE	PCM BIT SYNCHRONIZER TOP ASSEMBLY MODEL 335A	20747	PL 356-0181-522 SHEET 2 OF	A

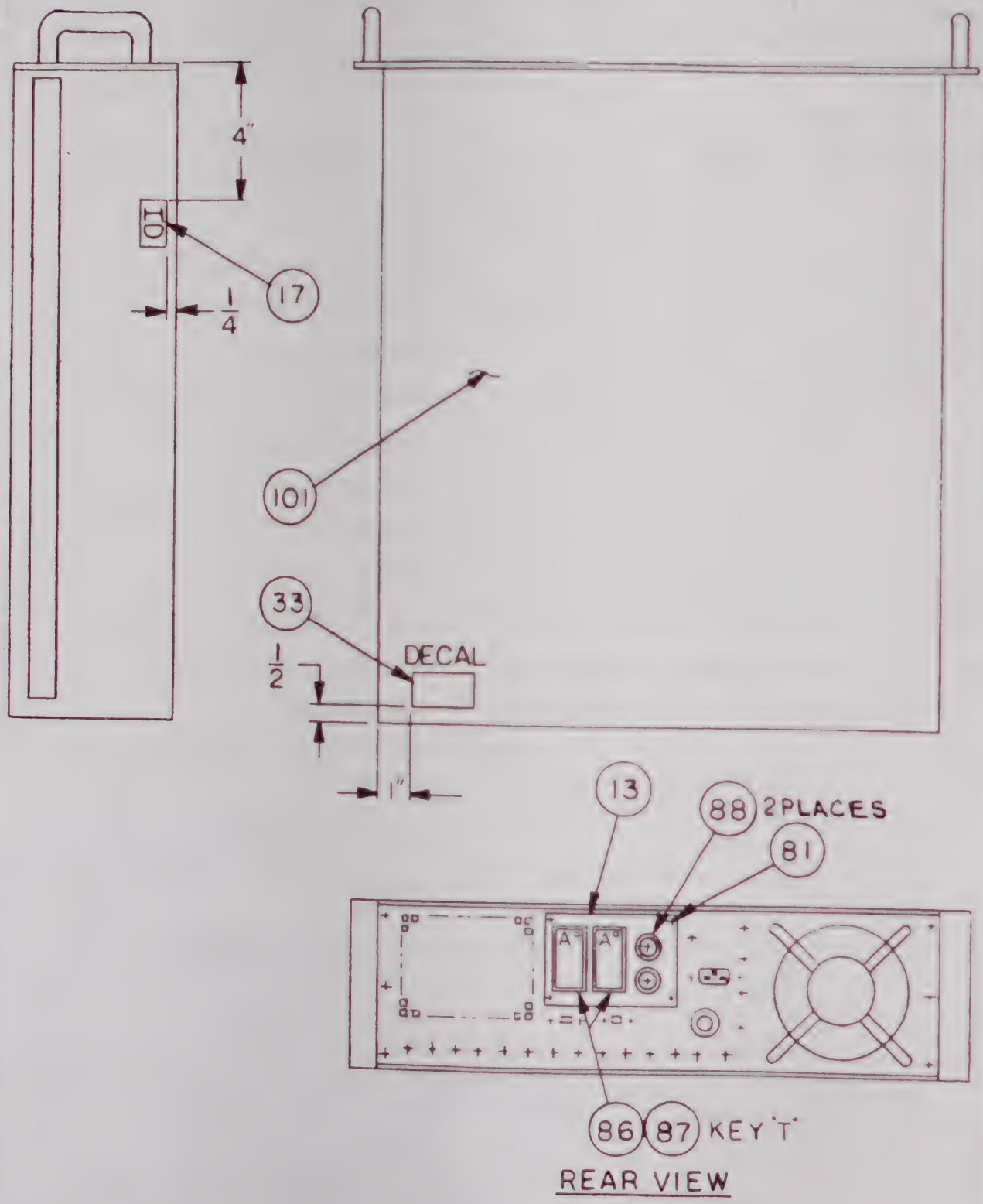

AYDIN MONITOR SYSTEMS

800-0153

CODE IDENT NO.	DWG NO.	REV
20747	PL 356-0181-522	A
	SHEET 3 OF 5	

PARTS LIST	DESIGN ACTIVITY IDENTIFICATION: AYDIN COMPUTER AND MONITOR DIVISION, HORSHAM, PA. 19044	CONTRACT NO. 6928	CAGE CODE 20747	PL356-0181-522	REV A

LIST TITLE	SUBCONTRACT NO.		SHEET NO.
T/A 335A-11-22-30			4

FIND NO	QTY REQ	U/M	CAGE CODE	DOCUMENT NUMBER	PART OR IDENTIFYING NUMBER	NOMENCLATURE OR DESCRIPTION	NOTES
013	1	EA		207-0704-004	207-0704-004	PLATE CONN MTG	
017	1	EA	20747	124-013-001	124-013-001	NAMEPLATE SELF ADHES	
033	1	EA		216-0370-012	216-0370-012	DECAL CONN IDENT	
081	4	EA	96906	127-109-014	MS51957-14	SCR PAN HD 4-40X5\16	
086	2	EA	20747	108-101-010	108-101-010	CONNECTOR 34 POS MALE	J17 J18
087	68	EA	00779	108-101-108	108-101-118	CONN PIN CONT 26-24	
088	2	EA	14949	108-302-001	BJ-27	COAX BNC SOLDER PIN	J15 J19
089	1	EA	20747	354-0181-502	354-0181-502	335 ACC	
098	1	EA	20747	460-1985-501	460-1985-501	LDR050-1	
099	1	EA	20747	460-1982-502	460-1982-502	BSD001-2 DATA QUALITY	
100	1	EA	20747	460-1990-501	460-1990-501	CARD ASSY INF043-1	
101	1	EA	20747	356-0181-500	356-0181-500	MODEL 335A-STD	
				AT 297-0477-504		ACCEPTANCE TEST PROCEDURE - MODEL 335	
				ID 353-0071		INSTALLATION DIAGRAM - RACK MTG	
				WL 730-2421		WIRE LIST - 16 BIT 1126B INTFACE	
				AT 297-1180		ACCEPTANCE TEST PROCEDURE - MOD 335A PCM BIT SYNC	
				WL 730-2481		WIRE LIST - 335A DATA QUALITY	

PL356-0181-522 A
SHEET 4

REVISIONS			
REV	DESCRIPTION	DATE	APPROVED
A	REV PER ECO 20105 PM	8-3-90	Y. Polsky

		CONTRACT NO.	AYDIN COMPUTER AND MONITOR Division 700 DRESHER ROAD HORSHAM PA 19044
		DRAWN S. HORDESKI DATE 1-20-89	PCM BIT SYNCHRONIZER TOP ASSEMBLY MODEL 335A-11-22-31
		CHECKED [signature] 1/20/89	
		DRAFTING [signature] 1-23-89	
	4952-6401	APPROVED [signature] 1/20/89	SIZE A · CAGE CODE 20747 · DWG NO PL356-0181-523 · REV A
NEXT ASSY	USED ON	APPROVED M.E. [signature] 1/29/89	
APPLICATION		APPROVED PROJECT [signature] 1/31/89	SCALE 1/4 · SHEET 1 OF 5

800-0018E

800-0129 MONITOR SYSTEMS INC.

POSITION NO.		1	2	3	4	5	6	7	8	9	10	11	12	13	14	15	16
KEY AND CONNECTOR POSITIONS AND P.C. CARD TYPES	FILE A1								BSD 001-2								
	KEY								12/18								
	FILE A2																
	KEY																
	FILE A3																
	KEY																

POSITION NO.		17	18	19	20	21	22	23	24	25	26	27	28	29	30	31	32
KEY AND CONNECTOR POSITIONS AND P.C. CARD TYPES	FILE A1	INF 043-1					LDR 050-1		LDR 053-1								
	KEY	X					10/24		8/16								
	FILE A2																
	KEY																
	FILE A3																
	KEY																

ALL CARDS ARE KEYED 8/12 UNLESS OTHERWISE NOTED.

DRAWN	CHECKED	TITLE	CODE IDENT NO.	DWG. NO.	REV
S. HORDESKI DATE 1.20.89	DATE	PCM BIT SYNCHRONIZER TOP ASSEMBLY MODEL 335A	20747	PL356-0181-523 SHEET 2 OF	A

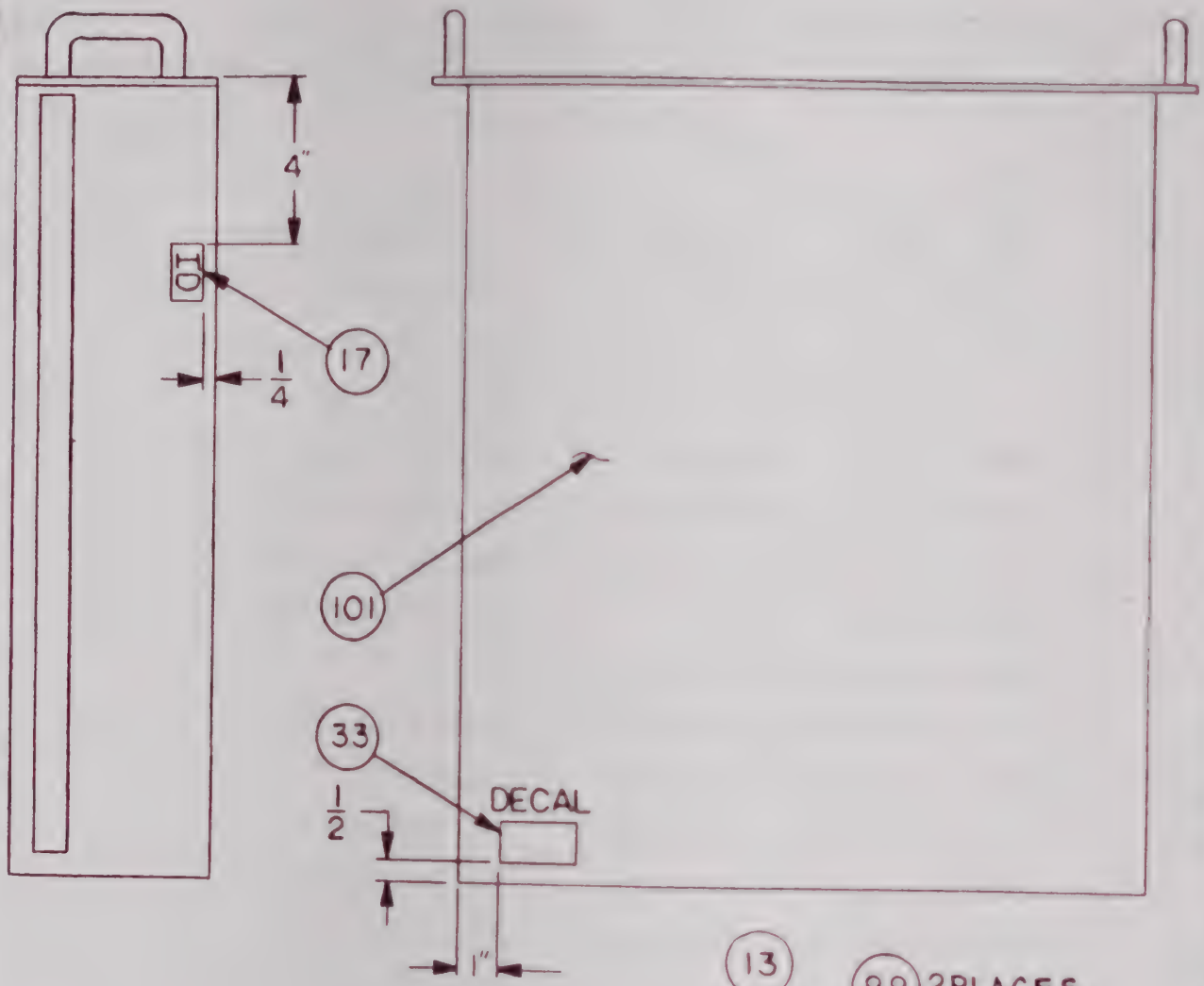

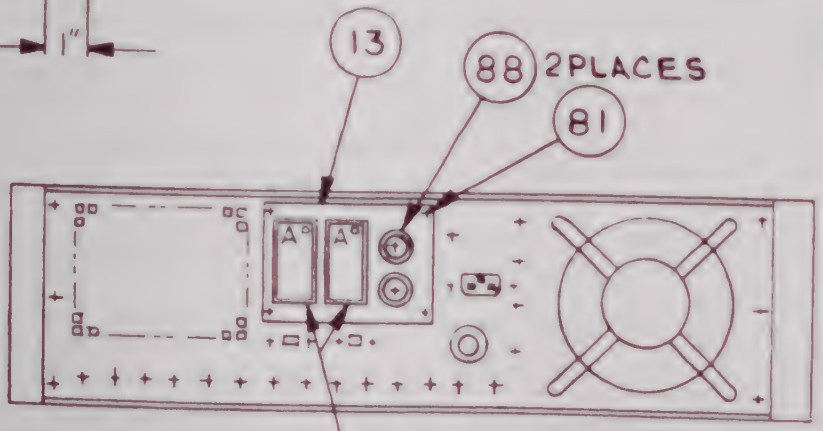

REAR VIEW

AYDIN MONITOR SYSTEMS

800-015

CODE IDENT NO.	DWG NO.	REV
20747	PL356-0181-523	A
	SHEET 3 OF 5	

PARTS LIST	DESIGN ACTIVITY IDENTIFICATION AYDIN COMPUTER AND MONITOR DIVISION HORSHAM, PA. 19044	CONTRACT NO. 6928	CAGE CODE 20747	PL356-0181-523	REV A

LIST TITLE T/A 335A-11-22-31	SUBCONTRACT NO.		SHEET NO. 4

FIND NO	QTY REQ	U/M	CAGE CODE	DOCUMENT NUMBER	PART OR IDENTIFYING NUMBER	NOMENCLATURE OR DESCRIPTION	NOTES
013	1	EA		207-0704-004	207-0704-004	PLATE CONN MTG	
017	1	EA	20747	124-013-001	124-013-001	NAMEPLATE SELF ADHES	
033	1	EA		216-0370-019	216-0370-019	DECAL CONN IDENT	
081	4	EA	96906	127-109-014	MS51957-14	SCR PAN HD 4-40X5\16	
086	2	EA	20747	108-101-010	108-101-010	CONNECTOR 34 POS MALE	J17 J18
087	68	EA	00779	108-101-108	108-101-118	CONN PIN CONT 26-24	
088	2	EA	14949	108-302-001	BJ-27	COAX BNC SOLDER PIN	J15 J19
089	1	EA	20747	354-0181-502	354-0181-502	335 ACC	
091	1	EA	20747	460-1982-502	460-1982-502	BSD001-2 DATA QUALITY	
092	1	EA	20747	460-1985-501	460-1985-501	LDR050-1	
093	1	EA	20747	460-2058-501	460-2058-501	CARD ASSY LDR053-1	
100	1	EA	20747	460-1990-501	460-1990-501	CARD ASSY INF043-1	
101	1	EA	20747	356-0181-500	356-0181-500	MODEL 335A-STD	
				AT 297-0477-504		ACCEPTANCE TEST PROCEDURE - MODEL 335	
				ID 353-0071		INSTALLATION DIAGRAM - RACK MTG	
				WL 730-2421		WIRE LIST - 16 BIT 1126B INTFACE	
				AT 297-1180		ACCEPTANCE TEST PROCEDURE - MOD 335A PCM BIT SYNC	
				WL 730-2481		WIRE LIST - 335A DATA QUALITY	
				WL 730-2492		WIRE LIST - MD 335A RNRZ-L OUTPUT	

PL356-0181-523 A
SHEET 4

REVISIONS			
REV	DESCRIPTION	DATE	APPROVED
A	REV PER ECO 20105 FM	8-3-90	V. Polsky

		CONTRACT NO.	
		DRAWN S. HORDESKI	DATE 1-20-89
		CHECKER [signature]	1/20/89
		DRAFTING [signature]	1-23-89
	4952-6401	APPROVED [signature]	1/20/89
NEXT ASSY	USED ON	APPROVED M.E. [signature]	1/29/89
APPLICATION		APPROVED PROJECT [signature]	1/31/89

AYDIN COMPUTER AND MONITOR Division
700 DRESHER ROAD HORSHAM, PA 19044

PCM BIT SYNCHRONIZER
TOP ASSEMBLY
MODEL 335A-11

SIZE	CAGE CODE	DWG NO	REV
A	20747	PL356-0181-524	A

SCALE 1/4 | SHEET 1 OF 5

800-0018E

800-0129 MONITOR SYSTEMS INC.

POSITION NO.		1	2	3	4	5	6	7	8	9	10	11	12	13	14	15	16
KEY AND CONNECTOR POSITIONS AND P.C. CARD TYPES	FILE A1								BSD 001-2								
	KEY								12/18								
	FILE A2																
	KEY																
	FILE A3																
	KEY																

POSITION NO.		17	18	19	20	21	22	23	24	25	26	27	28	29	30	31	32
KEY AND CONNECTOR POSITIONS AND P.C. CARD TYPES	FILE A1	INF 043-1					LDR 050-1										
	KEY	X					10/24										
	FILE A2																
	KEY																
	FILE A3																
	KEY																

ALL CARDS ARE KEYED 8/12 UNLESS OTHERWISE NOTED.

DRAWN	CHECKED	TITLE	CODE IDENT NO.	DWG. NO.	REV
S. HORDESKI DATE 1-20-89	DATE	PCM BIT SYNCHRONIZER TOP ASSEMBLY MODEL 335A	20747	PL356-0181-524 SHEET 2 OF	A

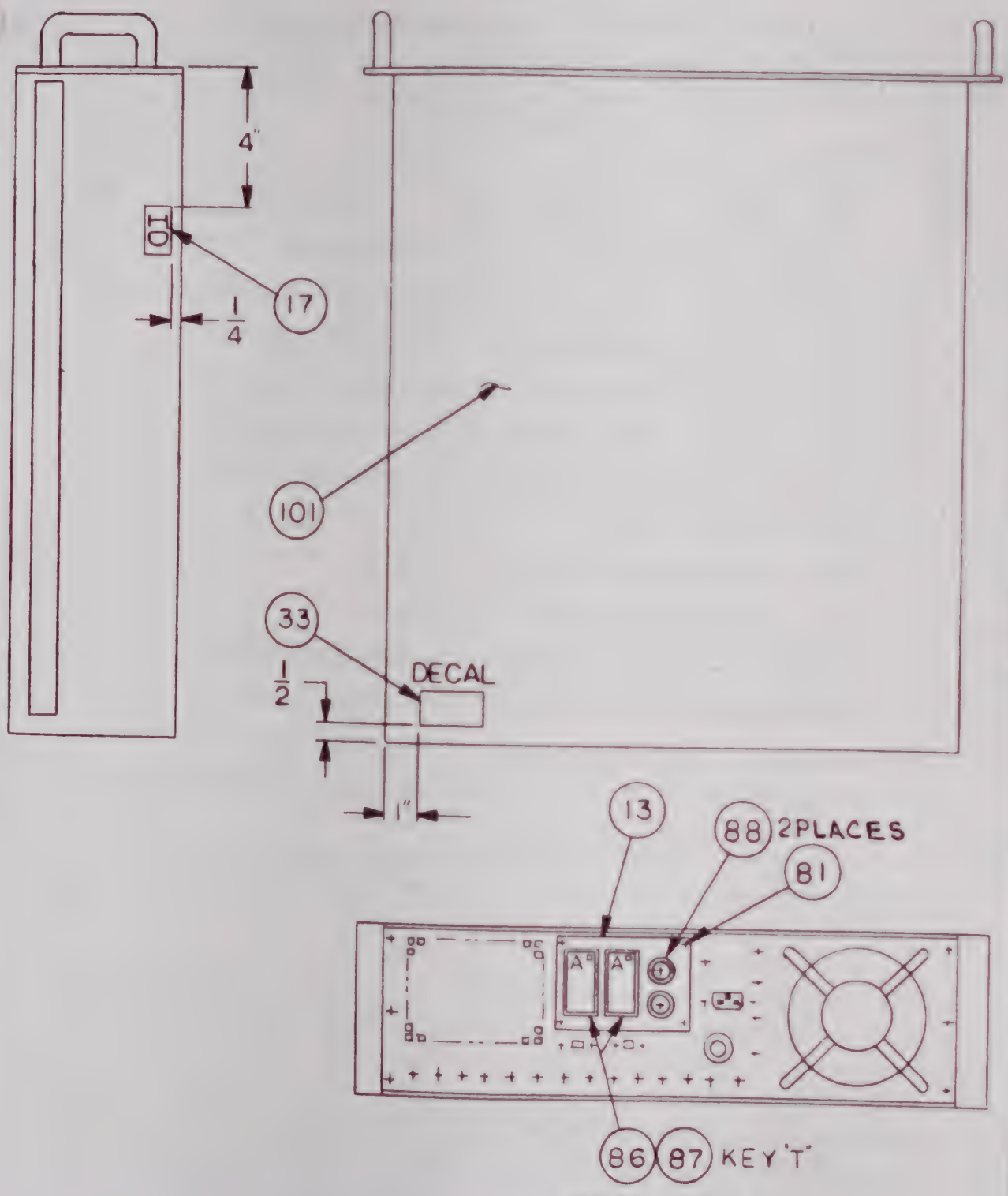

REAR VIEW

AYDIN MONITOR SYSTEMS

800-01

CODE IDENT NO.	DWG NO.	REV
20747	PL356-0181-524	A
	SHEET 3 OF 5	

PARTS LIST	DESIGN ACTIVITY IDENTIFICATION	CONTRACT NO.	CAGE CODE		REV
	AYDIN COMPUTER AND MONITOR DIVISION HORSHAM, PA. 19044	6928	20747	PL356-0181-524	A

LIST TITLE	SUBCONTRACT NO.		SHEET NO.
T/A 335A-11-22-32			4

FIND NO	QTY REQ	U/M	CAGE CODE	DOCUMENT NUMBER	PART OR IDENTIFYING NUMBER	NOMENCLATURE OR DESCRIPTION	NOTES
013	1	EA		207-0704-004	207-0704-004	PLATE CONN MTG	
017	1	EA	20747	124-013-001	124-013-001	NAMEPLATE SELF ADHES	
033	1	EA		216-0370-012	216-0370-012	DECAL CONN IDENT	
081	4	EA	96906	127-109-014	MS51957-14	SCR PAN HD 4-40X5\16	
086	2	EA	20747	108-101-010	108-101-010	CONNECTOR 34 POS MALE	J17 J18
087	68	EA	00779	108-101-108	108-101-118	CONN PIN CONT 26-24	
088	2	EA	14949	108-302-001	BJ-27	COAX BNC SOLDER PIN	J15 J19
089	1	EA	20747	354-0181-502	354-0181-502	335 ACC	
098	1	EA	20747	460-1985-501	460-1985-501	LDR050-1	
099	1	EA	20747	460-1982-502	460-1982-502	BSD001-2 DATA QUALITY	
100	1	EA	20747	460-1990-501	460-1990-501	CARD ASSY INF043-1	
101	1	EA	20747	356-0181-500	356-0181-500	MODEL 335A-STD	
				AT 297-0477-504		ACCEPTANCE TEST PROCEDURE - MODEL 335	
				ID 353-0071		INSTALLATION DIAGRAM - RACK MTG	
				WL 730-2421		WIRE LIST - 16 BIT 1126B INTFACE	
				AT 297-1180		ACCEPTANCE TEST PROCEDURE - MOD 335A PCM BIT SYNC	
				WL 730-2481		WIRE LIST - 335A DATA QUALITY	

PL356-0181-524 A
SHEET 4

REVISIONS			
REV	DESCRIPTION	DATE	APPROVED
A	REV PER ECO 18522 P.M	10-30-89	J. DULETT

		CONTRACT NO.	AYDIN COMPUTER AND MONITOR Division 700 DRESHER ROAD HORSHAM, PA 19044
		DRAWN S. HORDESKI DATE 1-20-89	PCM BIT SYNCHRONIZER TOP ASSEMBLY MODEL 335A-12
		CHECKED 1/20/89	
		DRAFTING 1-23-89	
		APPROVED 1/20/89	
	4952-6401	APPROVED MFG 2/1/89	SIZE A · CAGE CODE 20747 · DWG NO PL356-0181-525 · REV A
NEXT ASSY	USED ON		
APPLICATION		APPROVED PROJECT 2/2/89	SCALE NONE · SHEET 1 OF 6

800-0018E

800-0129 MONITOR SYSTEMS INC.

POSITION NO.		1	2	3	4	5	6	7	8	9	10	11	12	13	14	15	16
KEY AND CONNECTOR POSITIONS AND P.C. CARD TYPES	FILE A1																
	KEY																
	FILE A2																
	KEY																
	FILE A3																
	KEY																

POSITION NO.		17	18	19	20	21	22	23	24	25	26	27	28	29	30	31	32
KEY AND CONNECTOR POSITIONS AND P.C. CARD TYPES	FILE A1	INF IEEE							LDR 053-1								
	KEY	X							8/16								
	FILE A2																
	KEY																
	FILE A3																
	KEY																

ALL CARDS ARE KEYED 8/12 UNLESS OTHERWISE NOTED.

DRAWN	CHECKED	TITLE	CODE IDENT NO.	DWG. NO.	REV
S. HORDESKI		PCM BIT SYNCHRONIZER TOP ASSEMBLY MODEL 335A	20747	PL356-0181-525	A
DATE 1.20.89	DATE			SHEET 2 OF	

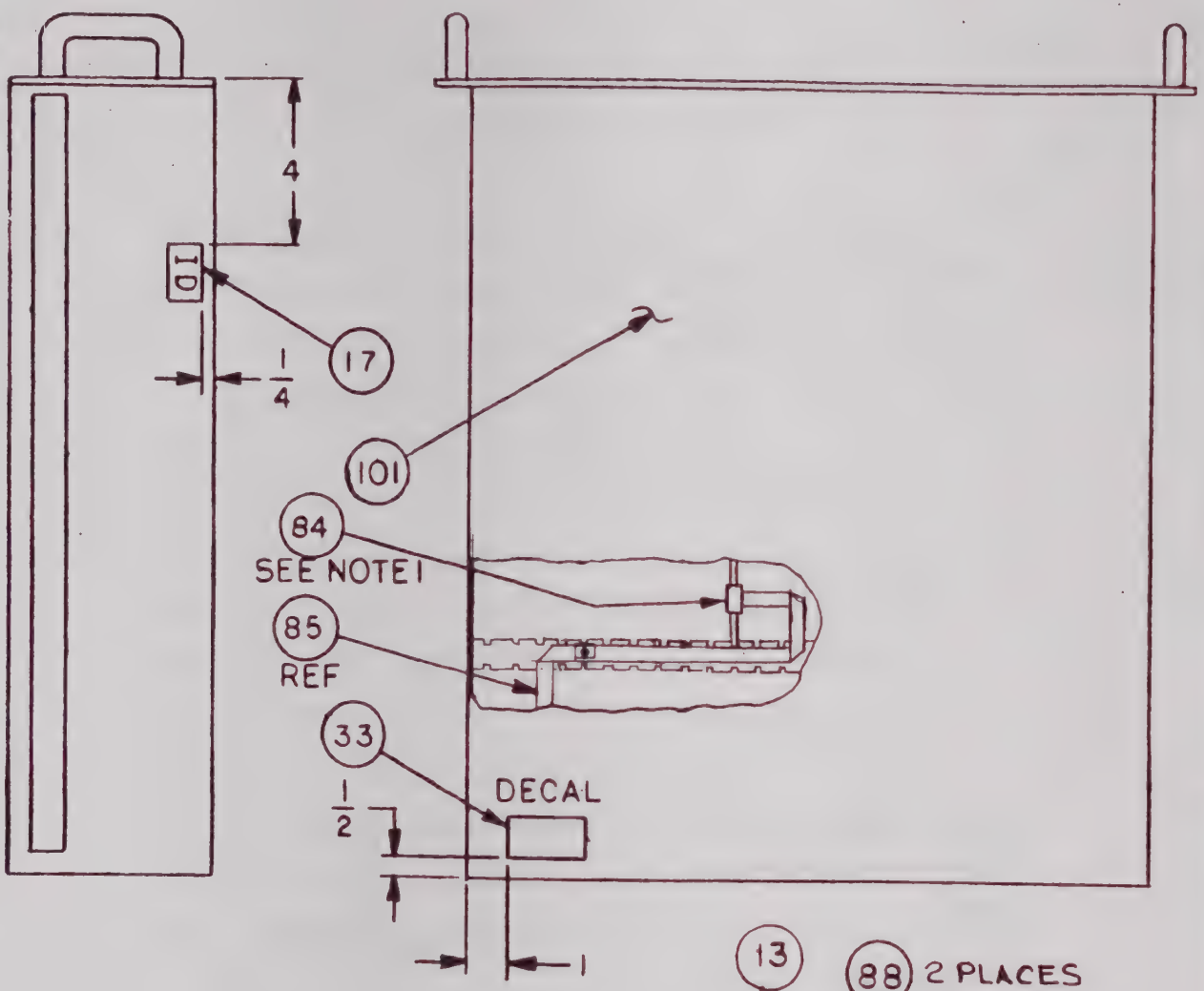

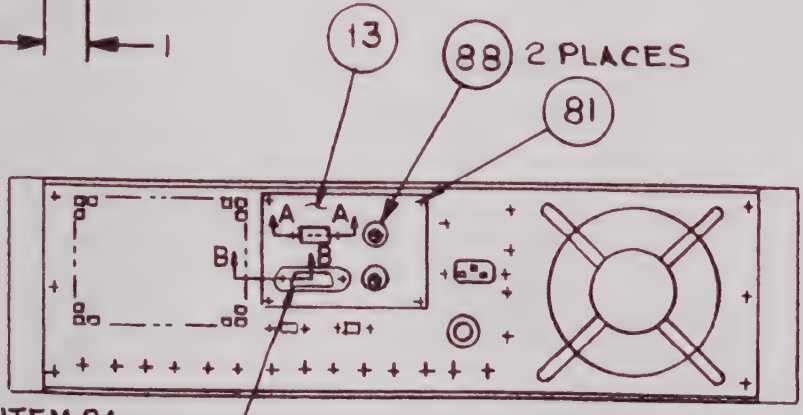

REAR VIEW

NOTES:

1. ASSEMBLE CONNECTOR, ITEM 84, TO SWITCH ASSY CABLE, ITEM 85, AFTER ROUTING CABLE.
2. SEE SHEET 4 FOR SECTION A-A AND B-B.

CODE IDENT NO.	DWG NO.	REV
20747	PL356-0181-525	A
	SHEET 3 OF	

AYDIN MONITOR SYSTEMS

800-015

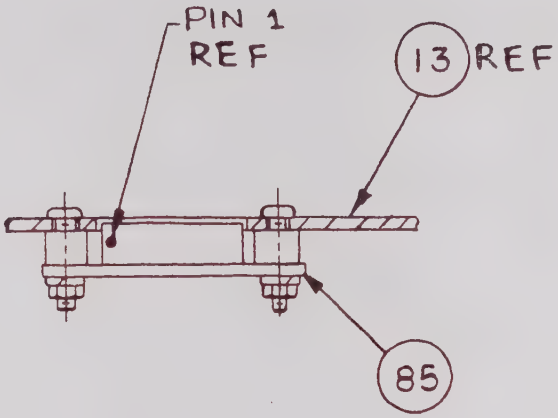

SECTION A-A

SCALE 1:1

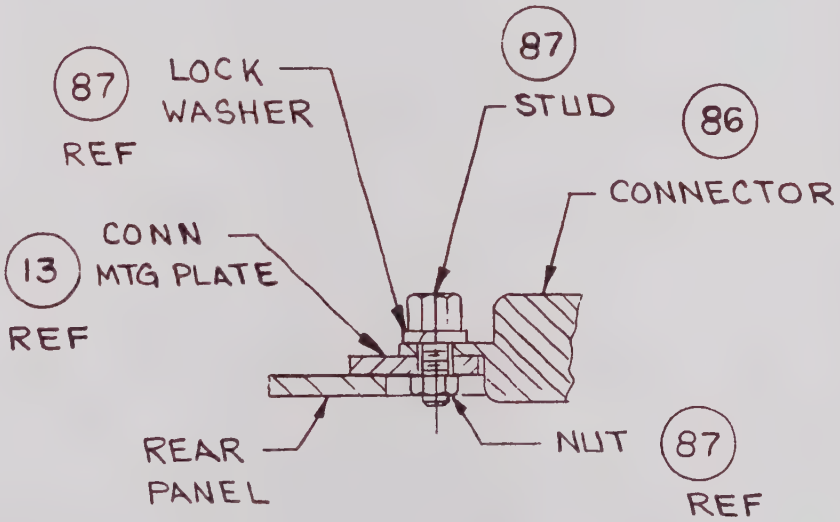

SECTION B-B

SCALE 1:1

CODE IDENT NO.	DWG NO.	REV
20747	PL 356-0181-525	A
	SHEET 4 OF	

AYDIN MONITOR SYSTEMS

800-0153A

PARTS LIST	DESIGN ACTIVITY IDENTIFICATION AYDIN COMPUTER AND MONITOR DIVISION HORSHAM, PA. 19044	CONTRACT NO. 9910	CAGE CODE 20747	PL356-0181-525	REV A

LIST TITLE T/A 335A-12-20-31	SUBCONTRACT NO.	SHEET NO. 5

FIND NO	QTY REQ	U/M	CAGE CODE	DOCUMENT NUMBER	PART OR IDENTIFYING NUMBER	NOMENCLATURE OR DESCRIPTION	NOTES
013	1	EA		207-0704-002	207-0704-002	PLATE CONN MTG	
017	1	EA	20747	124-013-001	124-013-001	NAMEPLATE SELF ADHES	
033	1	EA		216-0370-015	216-0370-015	DECAL CONN IDENT	
081	4	EA	96906	127-109-014	MS51957-14	SCR PAN HD 4-40X5\16	
084	1	EA	15912	108-273-110	622-1015	CONN CARD EDGE 10 POS	A1A17-P3
085	1	EA	20747	351-0383-501	351-0383-501	UNIT CODE SW ASSY	S33
086	1	EA	29587	108-113-009	57-20240-2	CONN RECEP 24 CONTACT	J17
087	1	EA	29587	108-113-101	408-15277-6	CONN MTG HARDWARE	
088	2	EA	14949	108-302-001	BJ-27	COAX BNC SOLDER PIN	J15 J19
089	1	EA	20747	354-0181-501	354-0181-501	335 ACC	
093	1	EA	20747	460-2058-501	460-2058-501	CARD ASSY LDR053-1	
100	1	EA	20747	470-0051-517	470-0051-517	INF045-335A-IEEE	
101	1	EA	20747	356-0181-500	356-0181-500	MODEL 335A-STD	
				ID 353-0071		INSTALLATION DIAGRAM - RACK MTG	
				WL 730-2422		WIRE LIST - IEEE INTERFACE	
				AT 297-1180		ACCEPTANCE TEST PROCEDURE - MOD 335A PCM BIT SYNC	
				WL 730-2492		WIRE LIST - MD 335A RNRZ-L OUTPUT	

REVISIONS			
REV	DESCRIPTION	DATE	APPROVED
A	REV PER ECO 20105 PM	8-3-90	V [illegible]

		CONTRACT NO.	AYDIN COMPUTER AND MONITOR Division 700 DRESHER ROAD HORSHAM, PA 19044
		DRAWN S. HORDESKI DATE 1-20-89	PCM BIT SYNCHRONIZER TOP ASSEMBLY MODEL 335A-12
		CHECKED [illegible] 1/20/89	
		DRAFTING [illegible] 1-23-89	
		APPROVED [illegible] 1/20/89	
	4952-6401	APPROVED M.E. [illegible] 2/1/89	SIZE A · CAGE CODE 20747 · DWG NO PL356-0181-526 · REV A
NEXT ASSY	USED ON	APPROVED PROJECT [illegible] 2/2/89	
APPLICATION			SCALE ¾ · SHEET 1 OF 6

800-0018E

800-0129 MONITOR SYSTEMS INC.

POSITION NO.		1	2	3	4	5	6	7	8	9	10	11	12	13	14	15	16
KEY AND CONNECTOR POSITIONS AND P.C. CARD TYPES	FILE A1																
	KEY																
	FILE A2																
	KEY																
	FILE A3																
	KEY																

POSITION NO.		17	18	19	20	21	22	23	24	25	26	27	28	29	30	31	32
KEY AND CONNECTOR POSITIONS AND P.C. CARD TYPES	FILE A1	INF IEEE															
	KEY	X															
	FILE A2																
	KEY																
	FILE A3																
	KEY																

ALL CARDS ARE KEYED 8/12 UNLESS OTHERWISE NOTED.

DRAWN	CHECKED	TITLE	CODE IDENT NO.	DWG. NO.	REV
S. HORDESKI DATE 1.20.89	DATE	PCM BIT SYNCHRONIZER TOP ASSEMBLY MODEL 335A	20747	PL356-0181-526 SHEET 2 OF	A

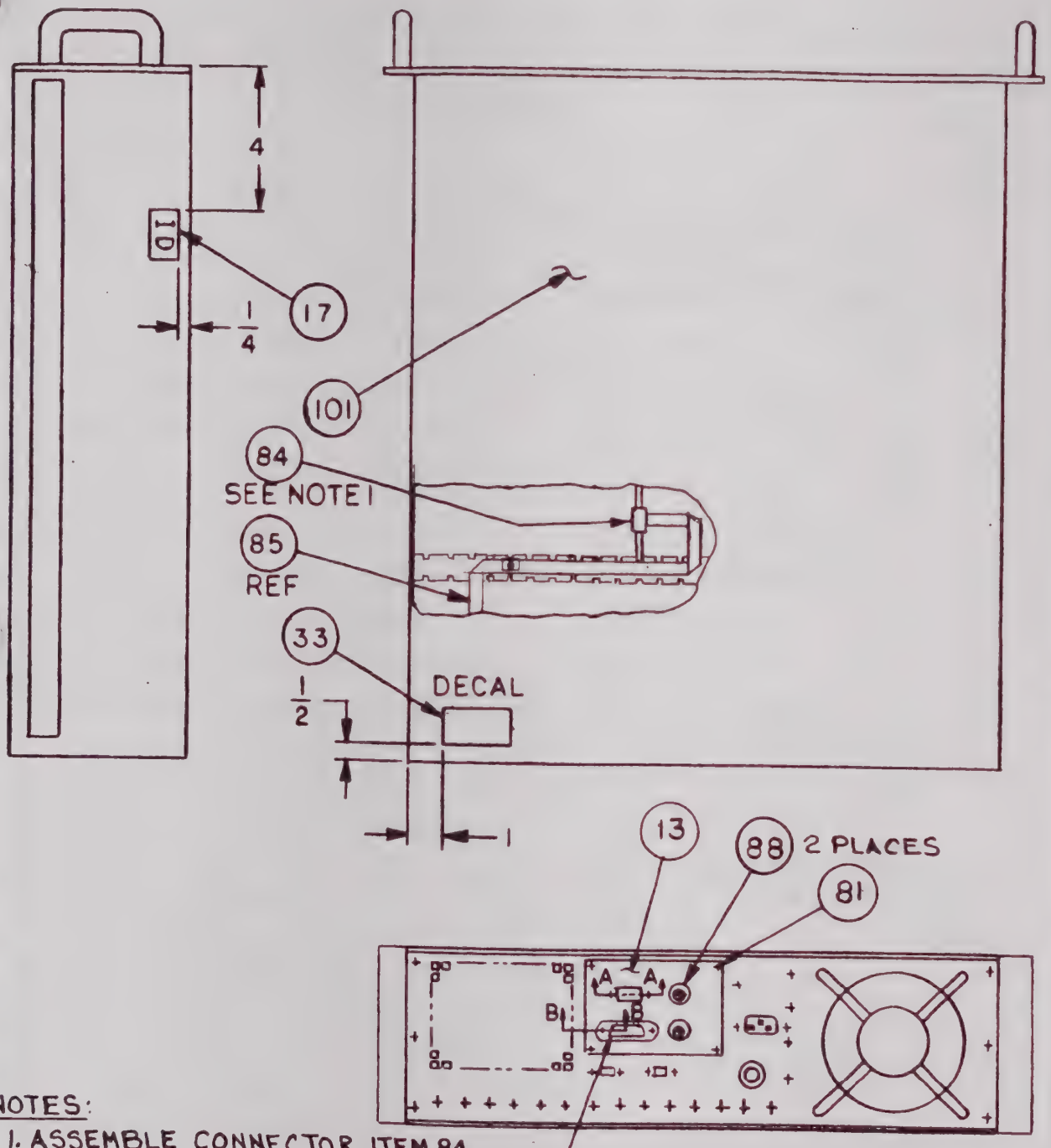

REAR VIEW

NOTES:

1. ASSEMBLE CONNECTOR, ITEM 84, TO SWITCH ASSY CABLE, ITEM 85, AFTER ROUTING CABLE.
2. SEE SHEET 4 FOR SECTION A-A AND B-B.

CODE IDENT NO.	DWG NO.	REV
20747	PL356-0181-526	A
	SHEET 3 OF	

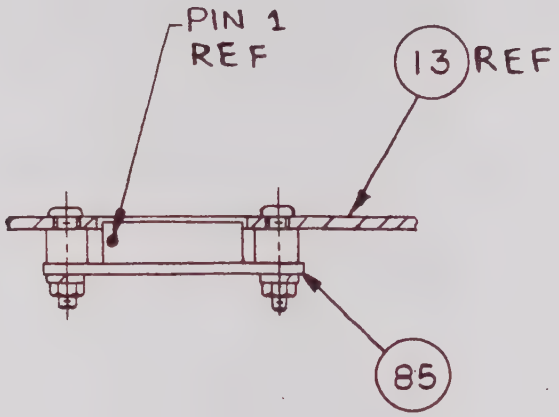

SECTION A-A

SCALE 1:1

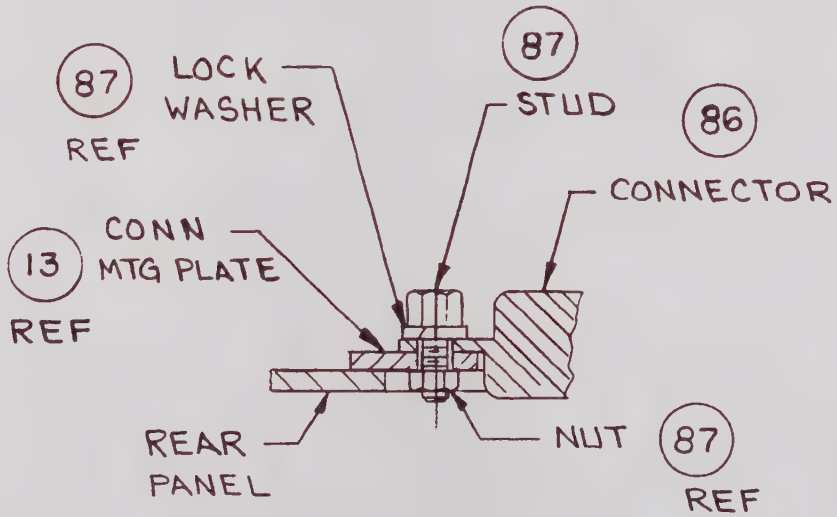

SECTION B-B

SCALE 1:1

AYDIN MONITOR SYSTEMS

800-0153A

CODE IDENT NO.	DWG NO.	REV
20747	PL 356-0181-526	A
	SHEET 4 OF	

PARTS LIST	DESIGN ACTIVITY IDENTIFICATION AYDIN COMPUTER AND MONITOR DIVISION HORSHAM, PA. 19044	CONTRACT NO. 6928	CAGE CODE 20747	PL356-0181-526	REV A

LIST TITLE T/A 335A-12-20-32	SUBCONTRACT NO.		SHEET NO. 5

FIND NO	QTY REQ	U/M	CAGE CODE	DOCUMENT NUMBER	PART OR IDENTIFYING NUMBER	NOMENCLATURE OR DESCRIPTION	NOTES
013	1	EA		207-0704-002	207-0704-002	PLATE CONN MTG	
017	1	EA	20747	124-013-001	124-013-001	NAMEPLATE SELF ADHES	
033	1	EA		216-0370-011	216-0370-011	DECAL CONN IDENT	
081	4	EA	96906	127-109-014	MS51957-14	SCR PAN HD 4-40X5\16	
084	1	EA	15912	108-273-110	622-1015	CONN CARD EDGE 10 POS	A1A17-P3
085	1	EA	20747	351-0383-501	351-0383-501	UNIT CODE SW ASSY	S33
086	1	EA	29587	108-113-009	57-20240-2	CONN RECEP 24 CONTACT	J17
087	1	EA	29587	108-113-101	408-15277-6	CONN MTG HARDWARE	
088	2	EA	14949	108-302-001	BJ-27	COAX BNC SOLDER PIN	J15 J19
089	1	EA	20747	354-0181-501	354-0181-501	335 ACC KIT	
100	1	EA	20747	470-0051-517	470-0051-517	INF045-335A-IEEE	
101	1	EA	20747	356-0181-500	356-0181-500	MODEL 335A-STD	
				ID 353-0071		INSTALLATION DIAGRAM - RACK MTG	
				WL 730-2422		WIRE LIST - IEEE INTERFACE	
				AT 297-1180		ACCEPTANCE TEST PROCEDURE - MOD 335A PCM BIT SYNC	

PL356-0181-526 A
SHEET 5

REVISIONS			
REV	DESCRIPTION	DATE	APPROVED
A	REV PER ECO 20105 PM	8-3-90	V. Polely

		CONTRACT NO.	AYDIN COMPUTER AND MONITOR Division 700 DRESHER ROAD HORSHAM, PA 19044
		DRAWN S. HORDESKI DATE 1-20-89	PCM BIT SYNCHRONIZER TOP ASSEMBLY MODEL 335A-12
		CHECKER [signature] 1/20/89	
		DRAFTING [signature] 1-23-89	
		APPROVED [signature] 1/20/89	
	4952-6401	APPROVED M.E. [signature] 2/1/89	SIZE A · CAGE CODE 20747 · DWG NO PL356-0181-527 · REV A
NEXT ASSY	USED ON	APPROVED PROJECT [signature] 2/2/89	
APPLICATION			SCALE 1/4 · SHEET 1 OF 6

800-0015E

800-0129 MONITOR SYSTEMS INC.

POSITION NO.		1	2	3	4	5	6	7	8	9	10	11	12	13	14	15	16
KEY AND CONNECTOR POSITIONS AND P.C. CARD TYPES	FILE A1								BSD 001-3								
	KEY								12 / 18								
	FILE A2																
	KEY																
	FILE A3																
	KEY																

POSITION NO.		17	18	19	20	21	22	23	24	25	26	27	28	29	30	31	32
KEY AND CONNECTOR POSITIONS AND P.C. CARD TYPES	FILE A1	INF IEEE					LDR 050-1		LDR 053-1								
	KEY	X					10 / 24		8 / 16								
	FILE A2																
	KEY																
	FILE A3																
	KEY																

ALL CARDS ARE KEYED 8/12 UNLESS OTHERWISE NOTED.

DRAWN	CHECKED	TITLE	CODE IDENT NO.	DWG. NO.	REV
S. HORDESKI DATE 1-20-89	DATE	PCM BIT SYNCHRONIZER TOP ASSEMBLY MODEL 335A	20747	PL356-0181-527 SHEET 2 OF	A

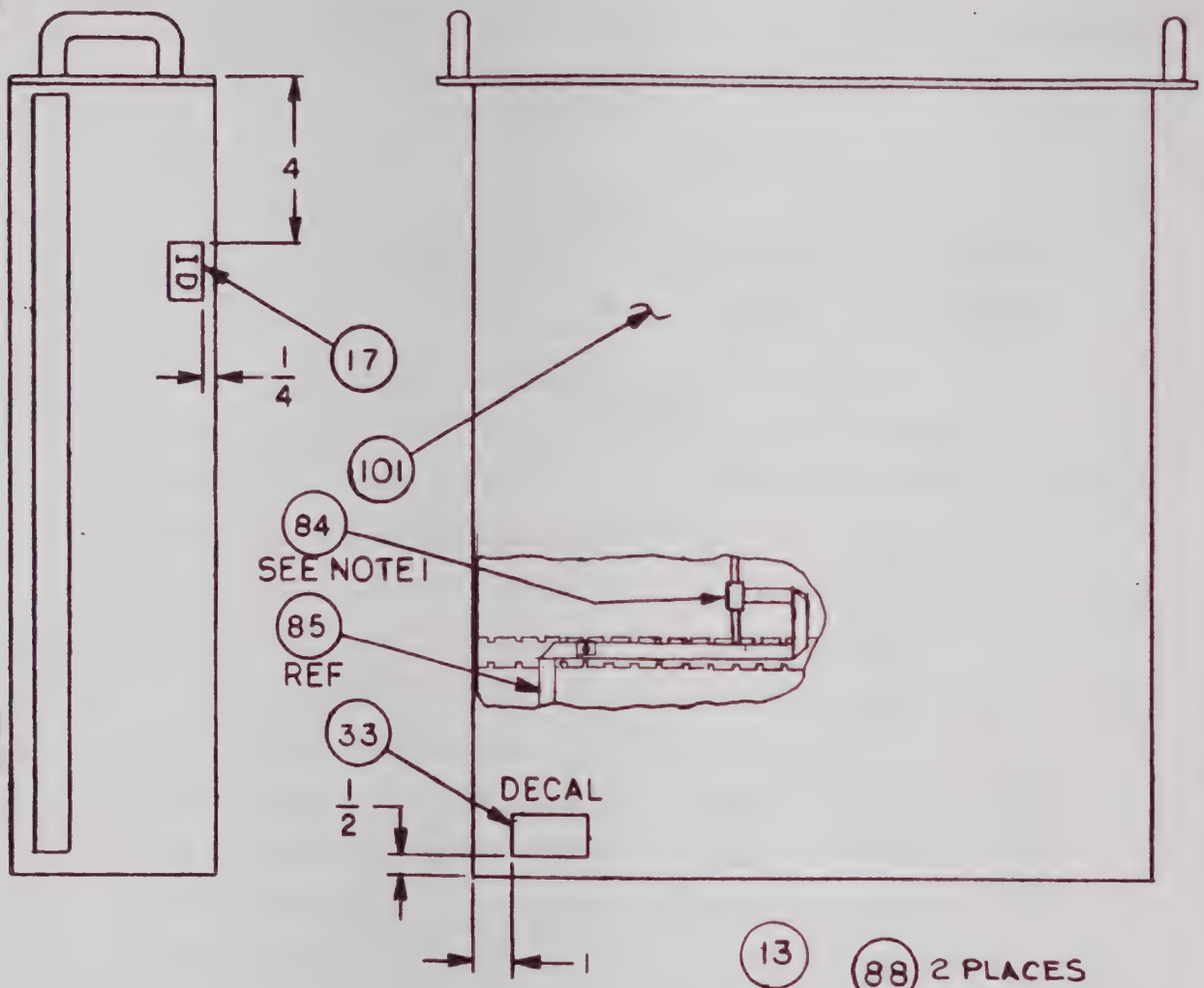

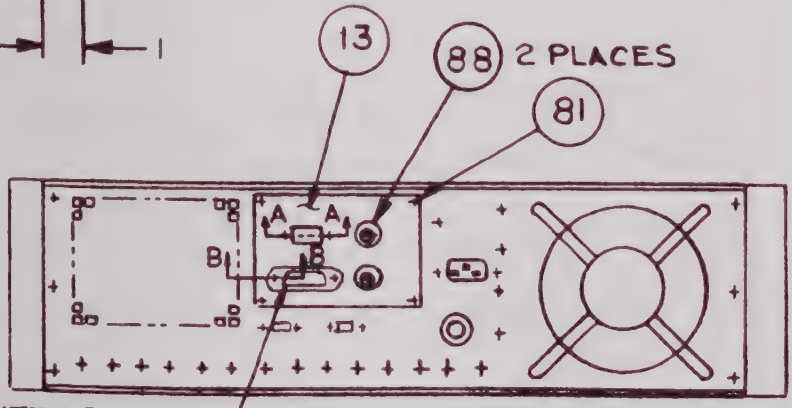

REAR VIEW

NOTES:

1. ASSEMBLE CONNECTOR, ITEM 84, TO SWITCH ASSY CABLE, ITEM 85, AFTER ROUTING CABLE.
2. SEE SHEET 4 FOR SECTION A-A AND B-B.

CODE IDENT NO.	DWG NO.	REV
20747	PL 356-0181-527	A
	SHEET 3 OF	

AYDIN MONITOR SYSTEMS

800-0153

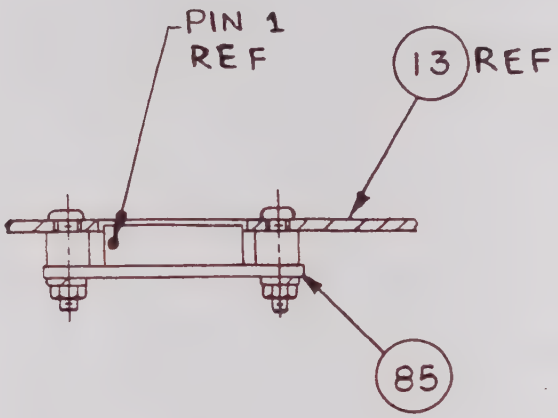

SECTION A-A

SCALE 1:1

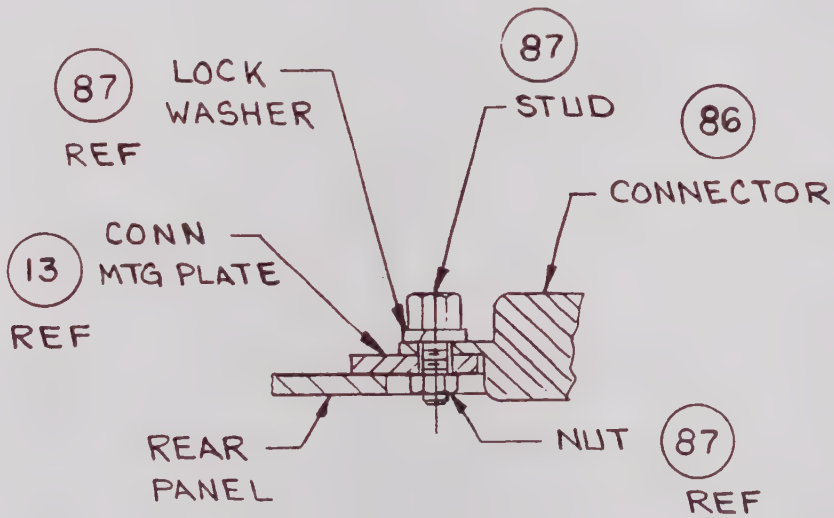

SECTION B-B

SCALE 1:1

CODE IDENT NO.	DWG NO.	REV
20747	PL 356-0181-527	A
	SHEET 4 OF	

AYDIN MONITOR SYSTEMS

800-0153A

PARTS LIST	DESIGN ACTIVITY IDENTIFICATION: AYDIN COMPUTER AND MONITOR DIVISION, HORSHAM, PA. 19044	CONTRACT NO. 6928	CAGE CODE 20747	PL356-0181-527	REV A

LIST TITLE	SUBCONTRACT NO.		SHEET NO.
T/A 335A-12-21-31			5

FIND NO	QTY REQ	U/M	CAGE CODE	DOCUMENT NUMBER	PART OR IDENTIFYING NUMBER	NOMENCLATURE OR DESCRIPTION	NOTES
013	1	EA		207-0704-002	207-0704-002	PLATE CONN MTG	
017	1	EA	20747	124-013-001	124-013-001	NAMEPLATE SELF ADHES	
033	1	EA		216-0370-016	216-0370-016	DECAL CONN IDENT	
081	4	EA	96906	127-109-014	MS51957-14	SCR PAN HD 4-40X5\16	
084	1	EA	15912	108-273-110	622-1015	CONN CARD EDGE 10 POS	A1A17-P3
085	1	EA	20747	351-0383-501	351-0383-501	UNIT CODE SW ASSY	S33
086	1	EA	29587	108-113-009	57-20240-2	CONN RECEP 24 CONTACT	J17
087	1	EA	29587	108-113-101	408-15277-6	CONN MTG HARDWARE	
088	2	EA	14949	108-302-001	BJ-27	COAX BNC SOLDER PIN	J15 J19
089	1	EA	20747	354-0181-501	354-0181-501	335 ACC KIT	
091	1	EA	20747	460-1982-503	460-1982-503	BSD001-3 SOFT BIT DEC	
092	1	EA	20747	460-1985-501	460-1985-501	LDR050-1	
093	1	EA	20747	460-2058-501	460-2058-501	CARD ASSY LDR053-1	
100	1	EA	20747	470-0051-517	470-0051-517	INF045-335A-IEEE	
101	1	EA	20747	356-0181-500	356-0181-500	MODEL 335A-STD	
				ID 353-0071		INSTALLATION DIAGRAM - RACK MTG	
				WL 730-2422		WIRE LIST - IEEE INTERFACE	
				WL 730-2475		WIRE LIST - 335A SOFT BIT DEC	
				AT 297-1180		ACCEPTANCE TEST PROCEDURE - MOD 335A PCM BIT SYNC	
				WL 730-2492		WIRE LIST - MD 335A RNRZ-L OUTPUT	

PL356-0181-527 A
SHEET 5

REVISIONS			
REV	DESCRIPTION	DATE	APPROVED
A	REV PER ECO 20105 PM	8-3-90	V. Polly

		CONTRACT NO.	AYDIN COMPUTER AND MONITOR Division 700 DRESHER ROAD HORSHAM, PA 19044
		DRAWN S. HORDESKI DATE 1-20-89	PCM BIT SYNCHRONIZER TOP ASSEMBLY MODEL 335A-12
		CHECKED [signature] 1/20/89	
		DRAFTING [signature] 1-23-89	
		APPROVED [signature] 1/20/89	
	4952-6401	APPROVED M.E. [signature] 2/1/89	SIZE A · CAGE CODE 20747 · DWG NO PL356-0181-528 · REV A
NEXT ASSY	USED ON	APPROVED PROJECT [signature] 2/2/89	SCALE NA · SHEET 1 OF 6
APPLICATION			

800-0018E

800-0129 MONITOR SYSTEMS INC.

POSITION NO.		1	2	3	4	5	6	7	8	9	10	11	12	13	14	15	16
KEY AND CONNECTOR POSITIONS AND P.C. CARD TYPES	FILE A1								BSD 001-3								
	KEY								12/18								
	FILE A2																
	KEY																
	FILE A3																
	KEY																

POSITION NO.		17	18	19	20	21	22	23	24	25	26	27	28	29	30	31	32
KEY AND CONNECTOR POSITIONS AND P.C. CARD TYPES	FILE A1	INF IEEE					LDR 050-1										
	KEY	X					10/24										
	FILE A2																
	KEY																
	FILE A3																
	KEY																

ALL CARDS ARE KEYED 8/12 UNLESS OTHERWISE NOTED.

DRAWN	CHECKED	TITLE	CODE IDENT NO.	DWG. NO.	REV
S. HORDESKI		PCM BIT SYNCHRONIZER TOP ASSEMBLY MODEL 335A	20747	PL 356-0181-528	A
DATE 1.20.89	DATE			SHEET 2 OF	

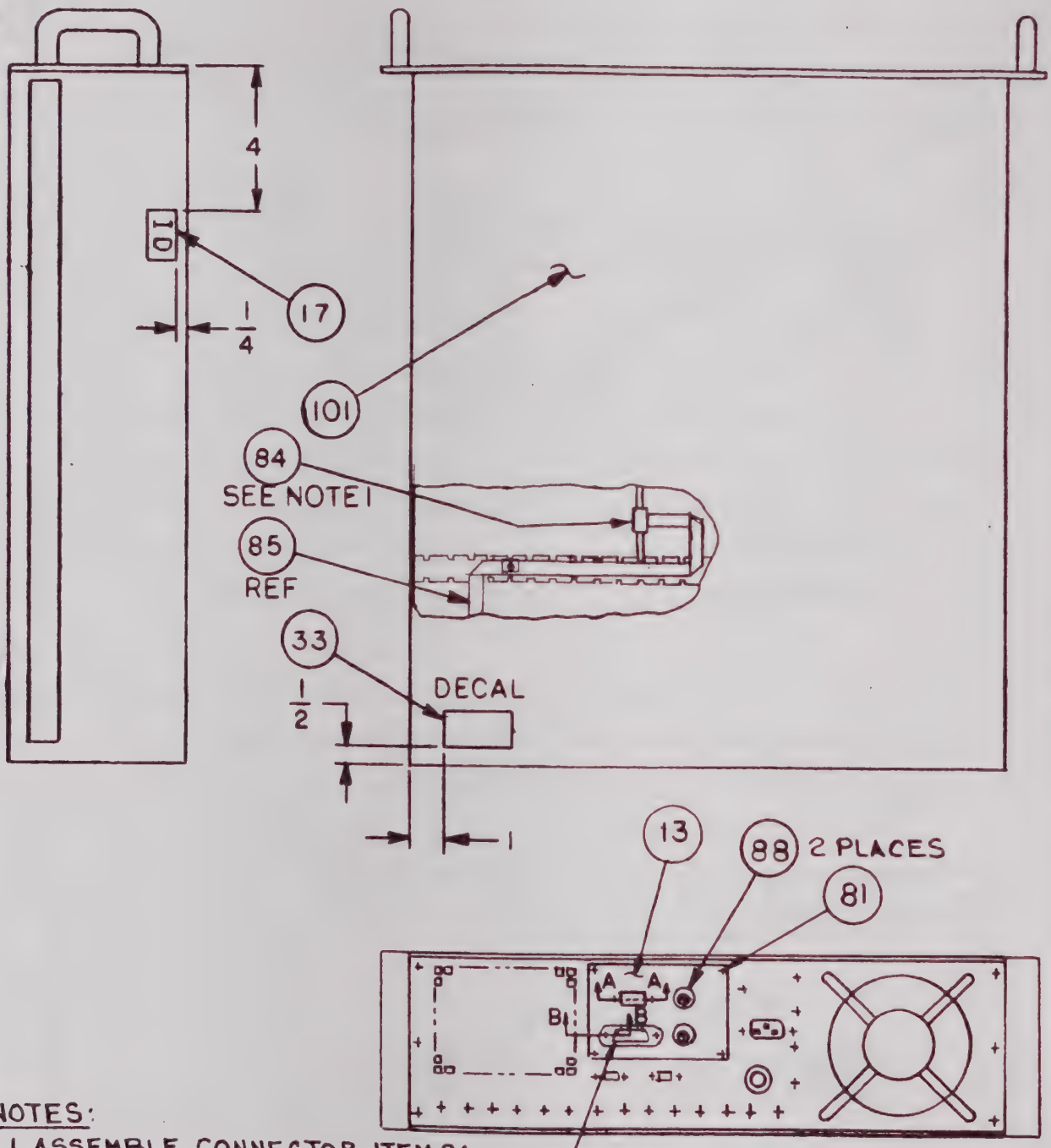

REAR VIEW

NOTES:

1. ASSEMBLE CONNECTOR, ITEM 84, TO SWITCH ASSY CABLE, ITEM 85, AFTER ROUTING CABLE.
2. SEE SHEET 4 FOR SECTION A-A AND B-B.

CODE IDENT NO.	DWG NO.	REV
20747	PL356-0181-528	A
	SHEET 3 OF	

AYDIN MONITOR SYSTEMS

800-0181

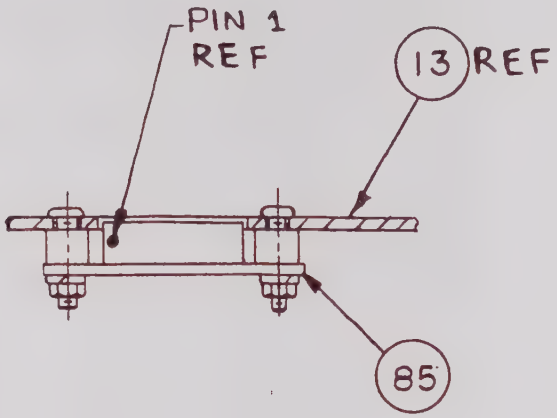

SECTION A - A

SCALE 1:1

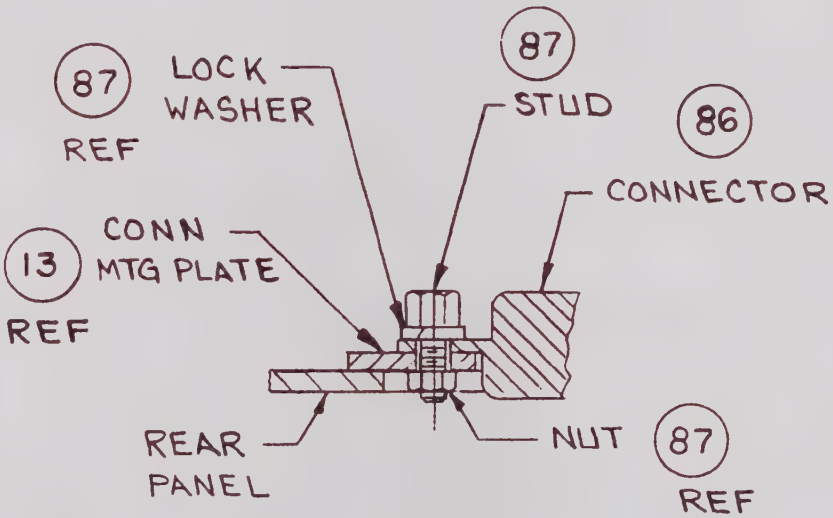

SECTION B-B

SCALE 1:1

AYDIN MONITOR SYSTEMS

800-0153A

CODE IDENT NO.	DWG NO.	REV
20747	PL 356-0181-528	A
	SHEET 4 OF	

PARTS LIST	DESIGN ACTIVITY IDENTIFICATION AYDIN COMPUTER AND MONITOR DIVISION HORSHAM, PA. 19044	CONTRACT NO. 6928	CAGE CODE 20747	PL356-0181-528	REV A

LIST TITLE	SUBCONTRACT NO.		SHEET NO.
T/A 335A-12-21-32			5

FIND NO	QTY REQ	U/M	CAGE CODE	DOCUMENT NUMBER	PART OR IDENTIFYING NUMBER	NOMENCLATURE OR DESCRIPTION	NOTES
013	1	EA		207-0704-002	207-0704-002	PLATE CONN MTG	
017	1	EA	20747	124-013-001	124-013-001	NAMEPLATE SELF ADHES	
033	1	EA		216-0370-005	216-0370-005	DECAL CONN IDENT	
081	4	EA	96906	127-109-014	MS51957-14	SCR PAN HD 4-40X5\16	
084	1	EA	15912	108-273-110	622-1015	CONN CARD EDGE 10 POS	A1A17-P3
085	1	EA	20747	351-0383-501	351-0383-501	UNIT CODE SW ASSY	S33
086	1	EA	29587	108-113-009	57-20240-2	CONN RECEP 24 CONTACT	J17
087	1	EA	29587	108-113-101	408-15277-6	CONN MTG HARDWARE	
088	2	EA	14949	108-302-001	BJ-27	COAX BNC SOLDER PIN	J15 J19
089	1	EA	20747	354-0181-501	354-0181-501	335 ACC KIT	
091	1	EA	20747	460-1982-503	460-1982-503	BSD001-3 SOFT BIT DEC	
092	1	EA	20747	460-0985-501	460-0985-501	PDC001-1	
100	1	EA	20747	470-0051-517	470-0051-517	INF045-335A-IEEE	
101	1	EA	20747	356-0181-500	356-0181-500	MODEL 335A-STD	
				ID 353-0071		INSTALLATION DIAGRAM - RACK MTG	
				WL 730-2422		WIRE LIST - IEEE INTERFACE	
				AT 297-1180		ACCEPTANCE TEST PROCEDURE - MOD 335A PCM BIT SYNC	

PL356-0181-528 A
SHEET 5

REVISIONS			
REV	DESCRIPTION	DATE	APPROVED
A	REV PER ECO 20105 PM	8-3-90	V. Raby

		CONTRACT NO.	
		DRAWN S. HORDESKI DATE 1-20-89	AYDIN COMPUTER AND MONITOR Division 700 DRESHER ROAD HORSHAM. PA 19044
		CHECKED JAKE LAYER	PCM BIT SYNCHRONIZER TOP ASSEMBLY MODEL 335A-12
		DRAFTING S. Stuckert 1-23-89	
	4952-6401	APPROVED JAKE LAYER	
NEXT ASSY	USED ON	APPROVED M.E. C.F. Volpe 2/1/89	SIZE A | CAGE CODE 20747 | DWG NO PL356-0181-529 | REV A
APPLICATION		APPROVED PROJECT 2/2/89	SCALE NL | SHEET 1 OF 6

800-0018E

800-0129 MONITOR SYSTEMS INC.

POSITION NO.		1	2	3	4	5	6	7	8	9	10	11	12	13	14	15	16
KEY AND CONNECTOR POSITIONS AND P.C. CARD TYPES	FILE A1								BSD 001-2								
	KEY								12/18								
	FILE A2																
	KEY																
	FILE A3																
	KEY																

POSITION NO.		17	18	19	20	21	22	23	24	25	26	27	28	29	30	31	32
KEY AND CONNECTOR POSITIONS AND P.C. CARD TYPES	FILE A1	INF IEEE					LDR 050-1		LDR 053-1								
	KEY	X					10/24		8/16								
	FILE A2																
	KEY																
	FILE A3																
	KEY																

ALL CARDS ARE KEYED 8/12 UNLESS OTHERWISE NOTED.

DRAWN	CHECKED	TITLE	CODE IDENT NO.	DWG. NO.	REV
S. HORDESKI		PCM BIT SYNCHRONIZER TOP ASSEMBLY MODEL 335A	20747	PL356-0181-529	A
DATE 1.20.89	DATE			SHEET 2 OF	

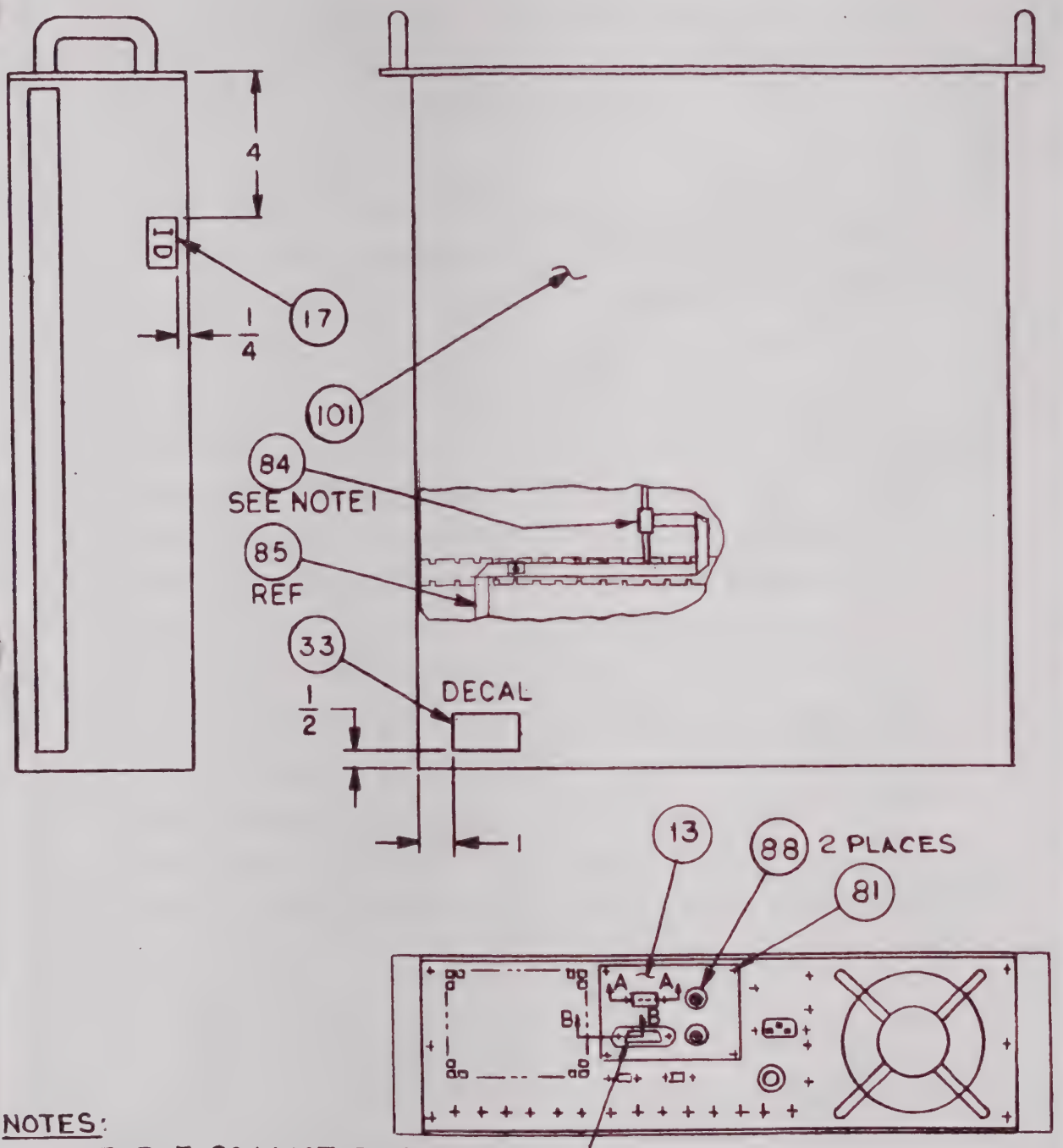

REAR VIEW

NOTES:

1. ASSEMBLE CONNECTOR, ITEM 84, TO SWITCH ASSY CABLE, ITEM 85, AFTER ROUTING CABLE.
2. SEE SHEET 4 FOR SECTION A-A AND B-B.

CODE IDENT NO.	DWG NO.	REV
20747	PL356-0181-529	A
	SHEET 3 OF	

AYDIN MONITOR SYSTEMS

800-015

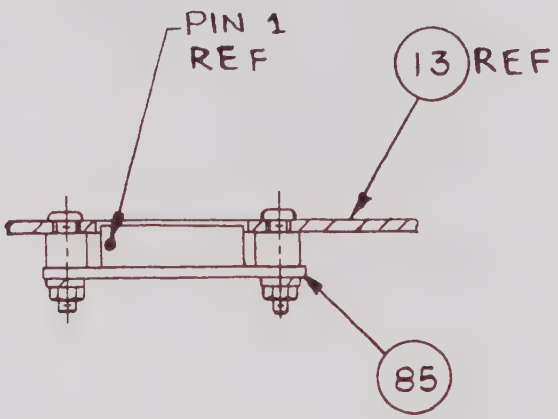

SECTION A-A

SCALE 1:1

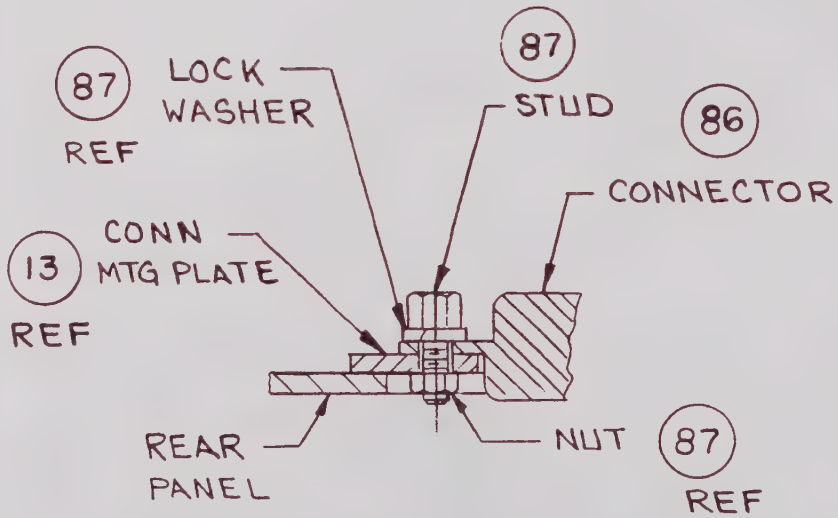

SECTION B-B

SCALE 1:1

CODE IDENT NO.	DWG NO.	REV
20747	PL 356-0181-529	A
	SHEET 4 OF	

800-0155A AYDIN MONITOR SYSTEMS

PARTS LIST	DESIGN ACTIVITY IDENTIFICATION AYDIN COMPUTER AND MONITOR DIVISION HORSHAM, PA. 19044	CONTRACT NO. 6928	CAGE CODE 20747	PL356-0181-529	REV A

LIST TITLE T/A 335A-12-22-31	SUBCONTRACT NO.		SHEET NO. 5

FIND NO	QTY REQ	U/M	CAGE CODE	DOCUMENT NUMBER	PART OR IDENTIFYING NUMBER	NOMENCLATURE OR DESCRIPTION	NOTES
013	1	EA		207-0704-002	207-0704-002	PLATE CONN MTG	
017	1	EA	20747	124-013-001	124-013-001	NAMEPLATE SELF ADHES	
033	1	EA		216-0370-019	216-0370-019	DECAL CONN IDENT	
081	4	EA	96906	127-109-014	MS51957-14	SCR PAN HD 4-40X5\16	
084	1	EA	15912	108-273-110	622-1015	CONN CARD EDGE 10 POS	A1A17-P3
085	1	EA	20747	351-0383-501	351-0383-501	UNIT CODE SW ASSY	S33
086	1	EA	29587	108-113-009	57-20240-2	CONN RECEP 24 CONTACT	J17
087	1	EA	29587	108-113-101	408-15277-6	CONN MTG HARDWARE	
088	2	EA	14949	108-302-001	BJ-27	COAX BNC SOLDER PIN	J15 J19
089	1	EA	20747	354-0181-501	354-0181-501	335 ACC KIT	
091	1	EA	20747	460-1982-502	460-1982-502	BSD001-2 DATA QUALITY	
092	1	EA	20747	460-1985-501	460-1985-501	LDR050-1	
093	1	EA	20747	460-2058-501	460-2058-501	CARD ASSY LDR053-1	
100	1	EA	20747	470-0051-517	470-0051-517	INF045-335A-IEEE	
101	1	EA	20747	356-0181-500	356-0181-500	MODEL 335A-STD	
				ID 353-0071		INSTALLATION DIAGRAM - RACK MTG	
				WL 730-2422		WIRE LIST - IEEE INTERFACE	
				AT 297-1180		ACCEPTANCE TEST PROCEDURE - MOD 335A PCM BIT SYNC	
				WL 730-2481		WIRE LIST - 335A DATA QUALITY	
				WL 730-2492		WIRE LIST - MD 335A RNRZ-L OUTPUT	

PL356-0181-529 A
SHEET 5

REVISIONS			
REV	DESCRIPTION	DATE	APPROVED
A	REV PER ECO 20105 PM	8-3-90	V. Polsky

		CONTRACT NO.	AYDIN COMPUTER AND MONITOR Division 700 DRESHER ROAD HORSHAM, PA 19044
		DRAWN S. HORDESKI DATE 1-20-89	PCM BIT SYNCHRONIZER TOP ASSEMBLY MODEL 335A-12
		CHECKED [signature] 1/20/89	
		DRAFTING [signature] 1-23-89	
		APPROVED [signature] 1/20/89	
	4952-6401	APPROVED M.E. [signature] 2/1/89	SIZE A · CAGE CODE 20747 · DWG NO PL356-0181-530 · REV A
NEXT ASSY	USED ON	APPROVED PROJECT [signature] 2/2/89	SCALE ¼ · SHEET 1 OF 6
APPLICATION			

800-0018E

800-0129 MONITOR SYSTEMS INC.

POSITION NO.		1	2	3	4	5	6	7	8	9	10	11	12	13	14	15	16
KEY AND CONNECTOR POSITIONS AND P.C. CARD TYPES	FILE A1								BSD 001-2								
	KEY								12/18								
	FILE A2																
	KEY																
	FILE A3																
	KEY																

POSITION NO.		17	18	19	20	21	22	23	24	25	26	27	28	29	30	31	32
KEY AND CONNECTOR POSITIONS AND P.C. CARD TYPES	FILE A1	INF IEEE					LDR 050-1										
	KEY	X					10/24										
	FILE A2																
	KEY																
	FILE A3																
	KEY																

ALL CARDS ARE KEYED 8/12 UNLESS OTHERWISE NOTED.

DRAWN	CHECKED	TITLE	CODE IDENT NO.	DWG. NO.	REV
S. HORDESKI		PCM BIT SYNCHRONIZER TOP ASSEMBLY MODEL 335A	20747	PL 356-0181-530	A
DATE 1.20.89	DATE			SHEET 2 OF	

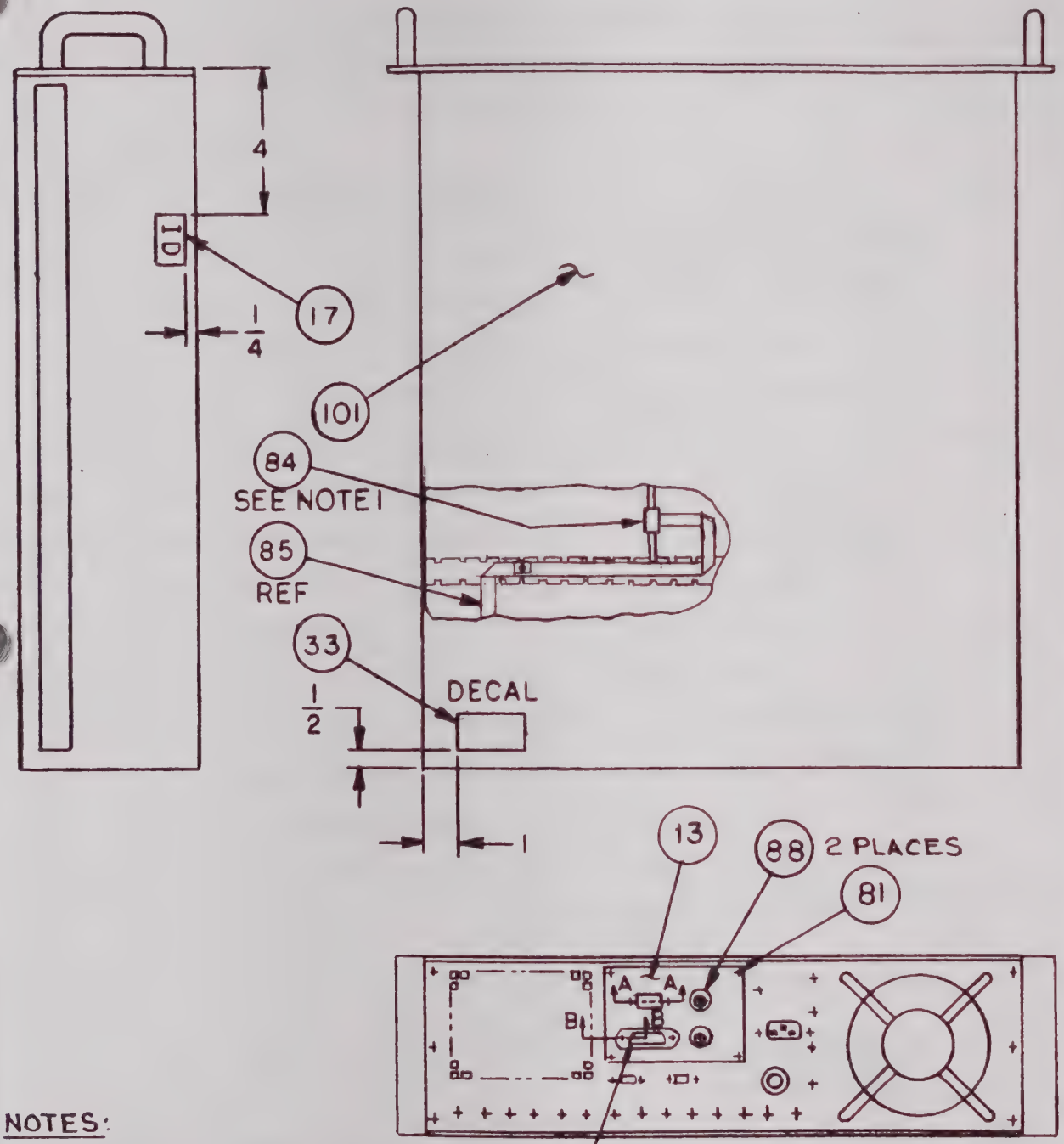

REAR VIEW

NOTES:

1. ASSEMBLE CONNECTOR, ITEM 84, TO SWITCH ASSY CABLE, ITEM 85, AFTER ROUTING CABLE.
2. SEE SHEET 4 FOR SECTION A-A AND B-B.

CODE IDENT NO.	DWG NO.	REV
20747	PL356-0181-530	A
	SHEET 3 OF	

AYDIN MONITOR SYSTEMS

800-0153

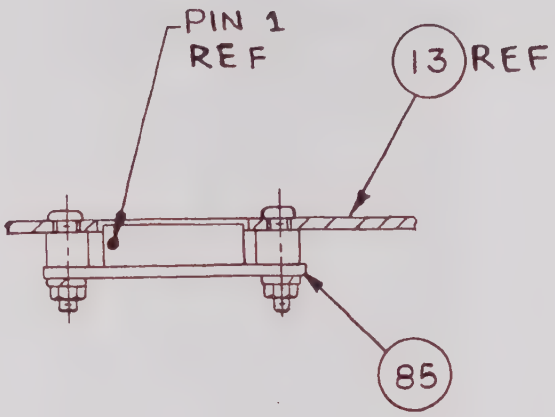

SECTION A - A

SCALE 1:1

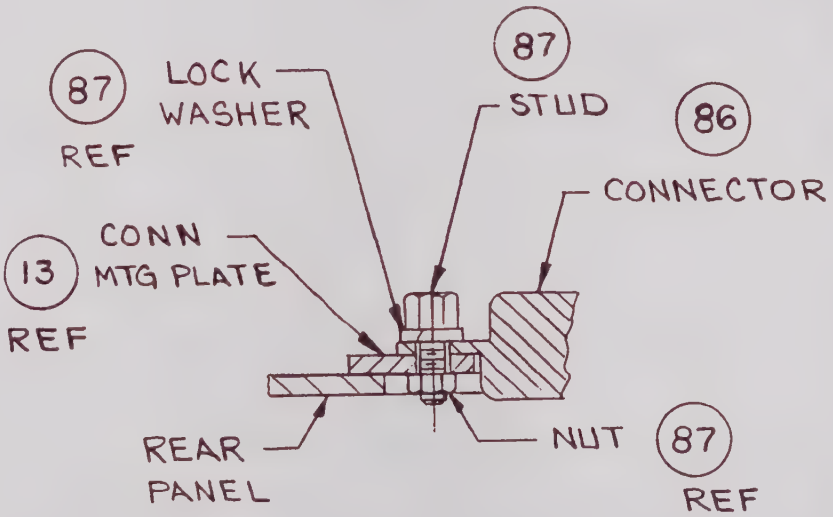

SECTION B-B

SCALE 1:1

CODE IDENT NO.	DWG NO.	REV
20747	PL 356-0181-530	A
	SHEET 4 OF	

AYDIN MONITOR SYSTEMS

800-0155A

PARTS LIST	DESIGN ACTIVITY IDENTIFICATION AYDIN COMPUTER AND MONITOR DIVISION HORSHAM, PA. 19044	CONTRACT NO. 6928	CAGE CODE 20747	PL356-0181-530	REV A

LIST TITLE T/A 335A-12-22-32	SUBCONTRACT NO.		SHEET NO. 5

FIND NO	QTY REQ	U/M	CAGE CODE	DOCUMENT NUMBER	PART OR IDENTIFYING NUMBER	NOMENCLATURE OR DESCRIPTION	NOTES
013	1	EA		207-0704-002	207-0704-002	PLATE CONN MTG	
017	1	EA	20747	124-013-001	124-013-001	NAMEPLATE SELF ADHES	
033	1	EA		216-0370-012	216-0370-012	DECAL CONN IDENT	
081	4	EA	96906	127-109-014	MS51957-14	SCR PAN HD 4-40X5\16	
084	1	EA	15912	108-273-110	622-1015	CONN CARD EDGE 10 POS	A1A17-P3
085	1	EA	20747	351-0383-501	351-0383-501	UNIT CODE SW ASSY	S33
086	1	EA	29587	108-113-009	57-20240-2	CONN RECEP 24 CONTACT	J17
087	1	EA	29587	108-113-101	408-15277-6	CONN MTG HARDWARE	
088	2	EA	14949	108-302-001	BJ-27	COAX BNC SOLDER PIN	J15 J19
089	1	EA	20747	354-0181-501	354-0181-501	335 ACC KIT	
091	1	EA	20747	460-1982-502	460-1982-502	BSD001-2 DATA QUALITY	
092	1	EA	20747	460-1985-501	460-1985-501	LDR050-1	
100	1	EA	20747	470-0051-517	470-0051-517	INF045-335A-IEEE	
101	1	EA	20747	356-0181-500	356-0181-500	MODEL 335A-STD	
				ID 353-0071		INSTALLATION DIAGRAM - RACK MTG	
				WL 730-2422		WIRE LIST - IEEE INTERFACE	
				AT 297-1180		ACCEPTANCE TEST PROCEDURE - MOD 335A PCM BIT SYNC	
				WL 730-2481		WIRE LIST - 335A DATA QUALITY	

PL356-0181-530 A
SHEET 5

REVISIONS			
REV	DESCRIPTION	DATE	APPROVED
A	REV PER ECO 19433 P.M	4-6-90	[illegible]
B	REV PER ECO 20105 PM	8-3-90	[illegible]
C	REVISED PER ECO 22704	2-3-92	[illegible]

		CONTRACT NO.	
		DRAWN S. HORDESKI	DATE 1-20-89
		CHECKED [illegible]	1/20/89
		DRAFTING [illegible]	1-23-89
		APPROVED [illegible]	1/20/89
	4952-6401	APPROVED M.E. [illegible]	1/29/89
NEXT ASSY	USED ON	APPROVED PROJECT [illegible]	1/31/89
APPLICATION			

AYDIN COMPUTER AND MONITOR Division
700 DRESHER ROAD HORSHAM, PA 19044

PCM BIT SYNCHRONIZER
TOP ASSEMBLY
MODEL 335A-13

SIZE	CAGE CODE	DWG NO	REV
A	20747	PL356-0181-531	C
SCALE [illegible]		SHEET 1 OF 6	

800-0018E

800-0129 MONITOR SYSTEMS INC.

POSITION NO.		1	2	3	4	5	6	7	8	9	10	11	12	13	14	15	16
KEY AND CONNECTOR POSITIONS AND P.C. CARD TYPES	FILE A1																
	KEY	/	/	/	/	/	/	/	/	/	/	/	/	/	/	/	/
	FILE A2																
	KEY	/	/	/	/	/	/	/	/	/	/	/	/	/	/	/	/
	FILE A3																
	KEY	/	/	/	/	/	/	/	/	/	/	/	/	/	/	/	/

POSITION NO.		17	18	19	20	21	22	23	24	25	26	27	28	29	30	31	32
KEY AND CONNECTOR POSITIONS AND P.C. CARD TYPES	FILE A1	INF 031							LDR 053-1								
	KEY	X	/	/	/	/	/	/	8/16	/	/	/	/	/	/	/	/
	FILE A2																
	KEY	/	/	/	/	/	/	/	/	/	/	/	/	/	/	/	/
	FILE A3																
	KEY	/	/	/	/	/	/	/	/	/	/	/	/	/	/	/	/

ALL CARDS ARE KEYED 8/12 UNLESS OTHERWISE NOTED.

DRAWN	CHECKED	TITLE	CODE IDENT NO.	DWG. NO.	REV
S. HORDESKI DATE 1.20.89	DATE	PCM BIT SYNCHRONIZER TOP ASSEMBLY MODEL 335A	20747	PL356-0181-531 SHEET 2 OF 6	C

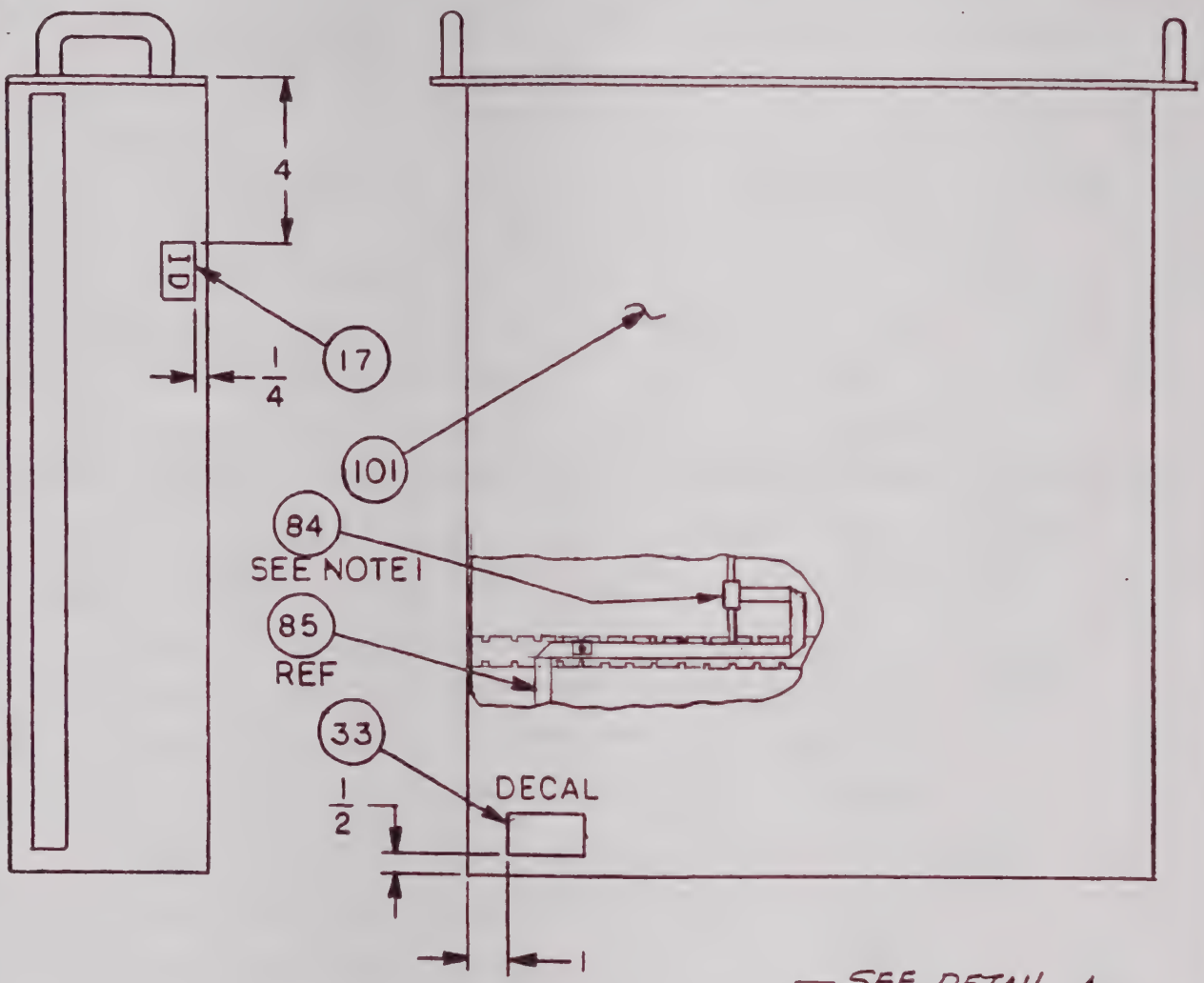

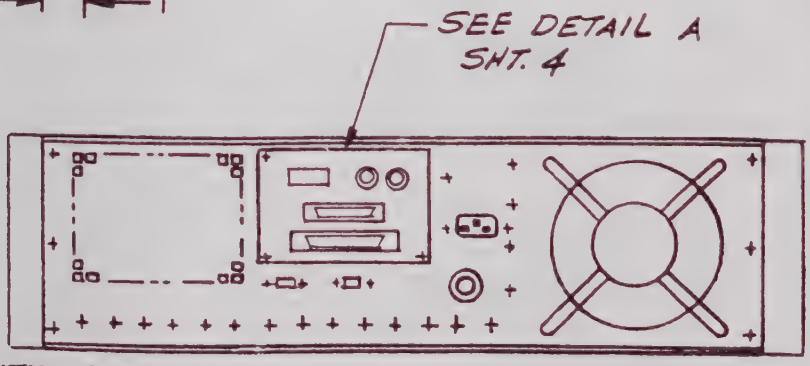

NOTES:

1. ASSEMBLE CONNECTOR, ITEM 84, TO SWITCH ASSY CABLE, ITEM 85, AFTER ROUTING CABLE.

REAR VIEW

CODE IDENT NO.	DWG NO.	REV
20747	PL 356-0181-531	C
	SHEET 3 OF 6	

AYDIN MONITOR SYSTEMS

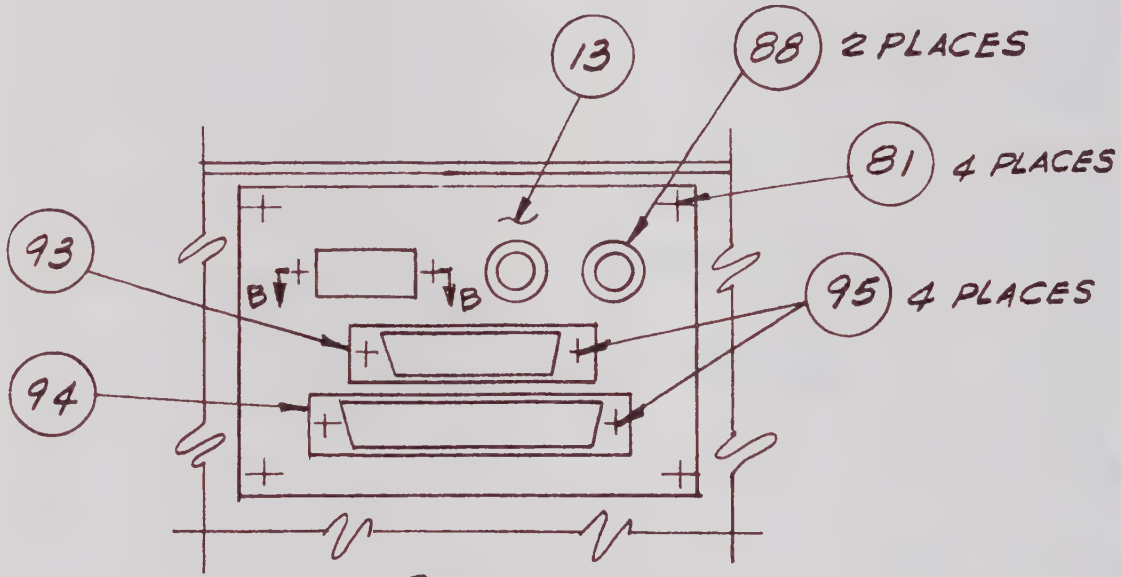

DETAIL A

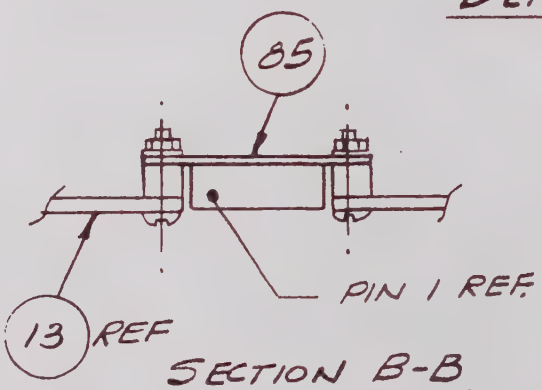

SECTION B-B

AYDIN MONITOR SYSTEMS

800-0153A

CODE IDENT NO.	DWG NO.	REV
20747	PL356-0181-531	C
	SHEET 4 OF 6	

PARTS LIST	DESIGN ACTIVITY IDENTIFICATION AYDIN COMPUTER AND MONITOR DIVISION HORSHAM, PA. 19044	CONTRACT NO.	CAGE CODE 20747	PL356-0181-531	REV C

LIST TITLE T/A 335A-13-20-31	SUBCONTRACT NO.		SHEET NO. 5

FIND NO	QTY REQ	U/M	CAGE CODE	DOCUMENT NUMBER	PART OR IDENTIFYING NUMBER	NOMENCLATURE OR DESCRIPTION	NOTES
013	1	EA	20747	207-0704-012	207-0704-012	PLATE CONN MTG	
017	1	EA	20747	124-013-001	124-013-001	NAMEPLATE SELF ADHES	
033	1	EA	20747	216-0370-015	216-0370-015	DECAL CONN IDENT	
081	4	EA	96906	127-109-014	MS51957-14	SCR PAN HD 4-40X5\16	
084	1	EA	15912	108-273-110	622-1015	CONN CARD EDGE 10 POS	A1A17-P3
085	1	EA	20747	351-0412-501	351-0412-501	UNIT CODE 338 ASSY	S33
088	2	EA	14949	108-302-001	BJ-27	COAX BNC SOLDER PIN	J15 J19
089	1	EA	20747	354-0181-501	354-0181-501	335 ACC KIT	
093	1	EA	71468	108-100-006	DB-25S	CONN 25 SOCKET SOLD	J17
094	1	EA	71468	108-100-008	DC-37S	CONN 37 SOCKET GOLD	J20
095	4	PR	71468	108-104-045	D20418-2	CONN SCR LOCK FEMALE	
096	1	EA	20747	460-2058-501	460-2058-501	CARD ASSY LDR053-1	
100	1	EA	20747	470-0089-509	470-0089-509	INF031-335A-13	
101	1	EA	20747	356-0181-500	356-0181-500	335A (STD)	
				ID 353-0071		INSTALLATION DIAGRAM - RACK MTG PROCEDURE	
				WL 730-2454		WIRE LIST - RS232/RS422 INTERFACE	
				AT 297-1180		ACCEPTANCE TEST PROCEDURE - MOD 335A PCM BIT SYNC	
				WL 730-2492		WIRE LIST - MD 335A RNRZ-L OUTPUT	
				AT 297-1342		ACCEPTANCE TEST PROCEDURE - ATP MODEL 335A-13	

REVISIONS				
REV	DESCRIPTION		DATE	APPROVED
A	REV PER ECO 19414	PM	4-6 90	K. Koch.
B	REV PER ECO 20106	PM	8-3-90	V. Paley

		CONTRACT NO.	AYDIN COMPUTER AND MONITOR Division		
		DRAWN S. HORDESKI DATE 1-20-89	700 DRESHER ROAD HORSHAM, PA 19044		
		CHECKED [signature] 1/20/89	PCM BIT SYNCHRONIZER		
		DRAFTING [signature] 1-23-89	TOP ASSEMBLY		
	4952-6401	APPROVED [signature] 1/20/89	MODEL 335A-13		
NEXT ASSY	USED ON	APPROVED M.E. [signature] 1/29/89	SIZE A	CAGE CODE 20747	DWG NO PL356-0181-532 REV B
APPLICATION		APPROVED PROJECT [signature] 1/31/89	SCALE NONE		SHEET 1 OF 6

800-0015E

800-0129 MONITOR SYSTEMS INC.

POSITION NO.		1	2	3	4	5	6	7	8	9	10	11	12	13	14	15	16
KEY AND CONNECTOR POSITIONS AND P.C. CARD TYPES	FILE A1																
	KEY																
	FILE A2																
	KEY																
	FILE A3																
	KEY																

POSITION NO.		17	18	19	20	21	22	23	24	25	26	27	28	29	30	31	32
KEY AND CONNECTOR POSITIONS AND P.C. CARD TYPES	FILE A1	INF 031															
	KEY	X															
	FILE A2																
	KEY																
	FILE A3																
	KEY																

ALL CARDS ARE KEYED 8/12 UNLESS OTHERWISE NOTED.

DRAWN S. HORDESKI DATE 1.20.89	CHECKED DATE	TITLE PCM BIT SYNCHRONIZER TOP ASSEMBLY MODEL 335A	CODE IDENT NO. 20747	DWG. NO. PL356-0181-532 SHEET 2 OF 6	REV B

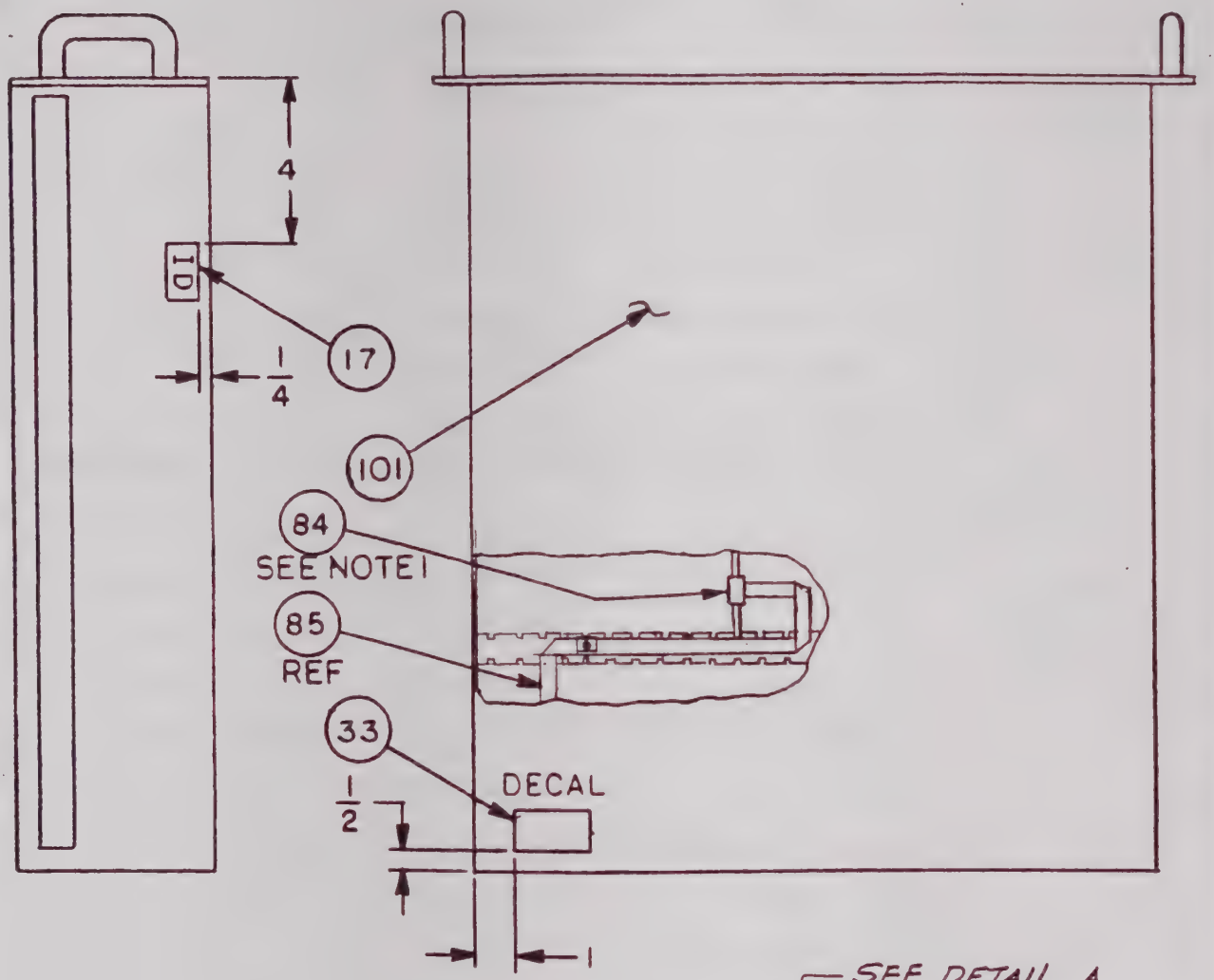

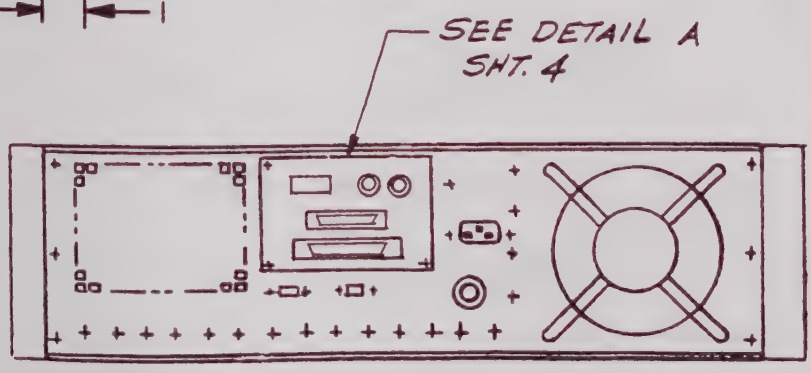

NOTES:

1. ASSEMBLE CONNECTOR, ITEM 84, TO SWITCH ASSY CABLE, ITEM 85, AFTER ROUTING CABLE.

REAR VIEW

CODE IDENT NO.	DWG NO.	REV
20747	PL 356-0181-532	B
	SHEET 3 OF 6	

AYDIN MONITOR SYSTEMS

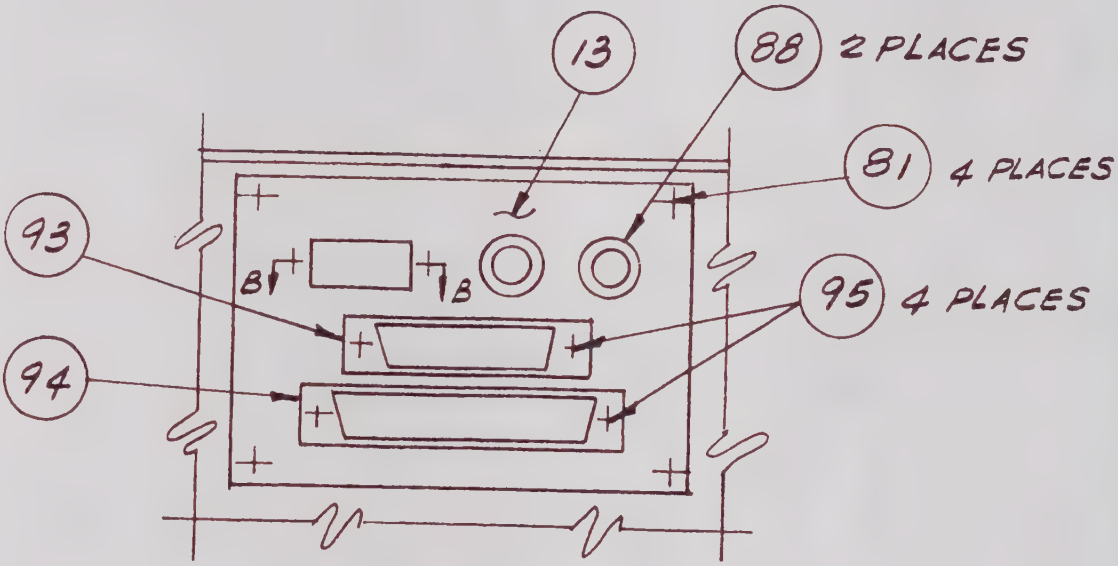

DETAIL A

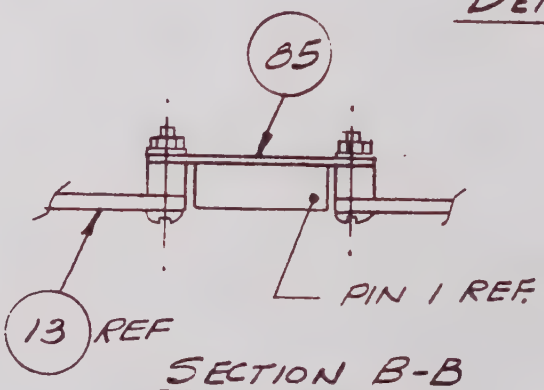

SECTION B-B

AYDIN MONITOR SYSTEMS

DWG-0133A

CODE IDENT NO.	DWG NO.	REV
20747	PL356-0181-532	B
	SHEET 4 OF 6	

PARTS LIST	DESIGN ACTIVITY IDENTIFICATION AYDIN COMPUTER AND MONITOR DIVISION HORSHAM, PA. 19044	CONTRACT NO. 6928	CAGE CODE 20747	PL356-0181-532	REV B

LIST TITLE T/A 335A-13-20-32	SUBCONTRACT NO.		SHEET NO. 5

FIND NO	QTY REQ	U/M	CAGE CODE	DOCUMENT NUMBER	PART OR IDENTIFYING NUMBER	NOMENCLATURE OR DESCRIPTION	NOTES
013	1	EA		207-0704-012	207-0704-012	PLATE CONN MTG	
017	1	EA	20747	124-013-001	124-013-001	NAMEPLATE SELF ADHES	
033	1	EA		216-0370-011	216-0370-011	DECAL CONN IDENT	
081	4	EA	96906	127-109-014	MS51957-14	SCR PAN HD 4-40X5\16	
084	1	EA	15912	108-273-110	622-1015	CONN CARD EDGE 10 POS	A1A17-P3
085	1	EA	20747	351-0412-501	351-0412-501	UNIT CODE 338 ASSY	S33
088	2	EA	14949	108-302-001	BJ-27	COAX BNC SOLDER PIN	J15 J19
089	1	EA	20747	354-0181-501	354-0181-501	335 ACC KIT	
093	1	EA	71468	108-100-006	DB-25S	CONN 25 SOCKET SOLD	J17
094	1	EA	71468	108-100-008	DC-37S	CONN 37 SOCKET SOLD	J20
095	4	PR	71468	108-104-045	D20418-2	CONN SCR LOCK FEMALE	
100	1	EA	20747	470-0089-509	470-0089-509	T/A INF031-1 CARD ASSY	
101	1	EA	20747	356-0181-500	356-0181-500	MODEL 335A-STD	
				ID 353-0071		INSTALLATION DIAGRAM - RACK MTG	
				WL 730-2454		WIRE LIST - RS232/RS422 INTERFACE	
				AT 297-1180		ACCEPTANCE TEST PROCEDURE - MOD 335A PCM BIT SYNC	
				AT 297-1342		ACCEPTANCE TEST PROCEDURE - ATP MODEL 335A-13	

PL356-0181-532 B
SHEET 5

REVISIONS			
REV	DESCRIPTION	DATE	APPROVED
A	REV PER ECO 19413 P.M	4-6-90	A. Koch
B	REV PER ECO 20106 PM	8-3-90	V. Polly

		CONTRACT NO.
		DRAWN S. HORDESKI DATE 1-20-89
		CHECKED [signature] 1/20/89
		DRAFTING [signature] 1-23-89
	4952-6401	APPROVED [signature] 1/20/89
ASSY	USED ON	APPROVED M.E. [signature] 1/29/89
PLICATION		APPROVED PROJECT [signature] 1/31/89
ISE		

AYDIN COMPUTER AND MONITOR Division
700 DRESHER ROAD HORSHAM, PA 19044

PCM BIT SYNCHRONIZER
TOP ASSEMBLY
MODEL 335A-13-21-3Ø

SIZE	CAGE CODE	DWG NO	REV
A	20747	PL356-0181-533	B
SCALE ¼		SHEET 1 OF 6	

800-0129 MONITOR SYSTEMS INC.

POSITION NO.		1	2	3	4	5	6	7	8	9	10	11	12	13	14	15	16
KEY AND CONNECTOR POSITIONS AND P.C. CARD TYPES	FILE A1								BSD 001-3								
	KEY								12/18								
	FILE A2																
	KEY																
	FILE A3																
	KEY																

POSITION NO.		17	18	19	20	21	22	23	24	25	26	27	28	29	30	31	32
KEY AND CONNECTOR POSITIONS AND P.C. CARD TYPES	FILE A1	INF 031					LDR 050-1										
	KEY	X					10/24										
	FILE A2																
	KEY																
	FILE A3																
	KEY																

ALL CARDS ARE KEYED 8/12 UNLESS OTHERWISE NOTED.

DRAWN	CHECKED	TITLE	CODE IDENT NO.	DWG. NO.	REV
S. HORDESKI DATE 1.20.89	DATE	PCM BIT SYNCHRONIZER TOP ASSEMBLY MODEL 335A	20747	PL356-0181-533 SHEET 2 OF 6	B

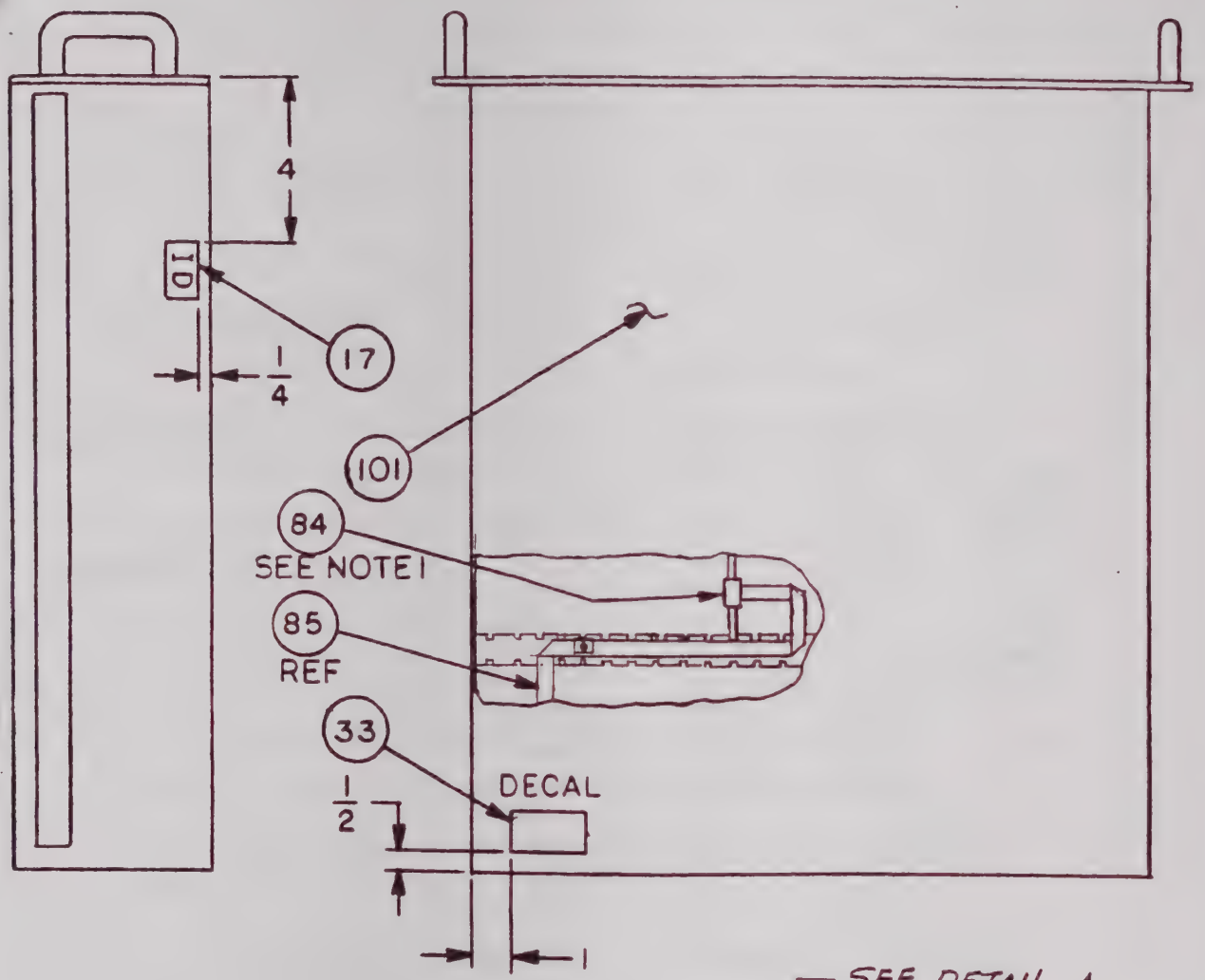

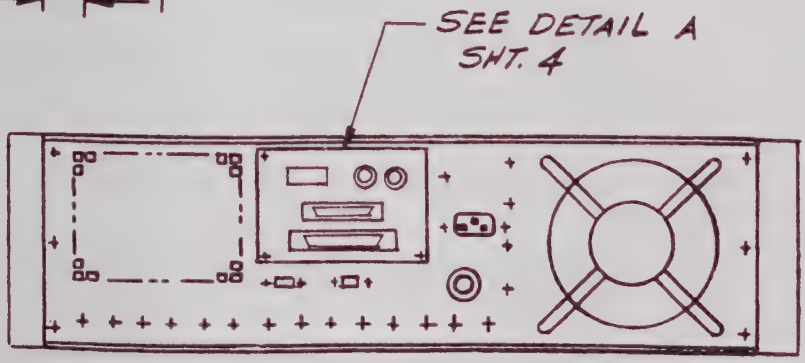

NOTES:

1. ASSEMBLE CONNECTOR, ITEM 84, TO SWITCH ASSY CABLE, ITEM 85, AFTER ROUTING CABLE.

REAR VIEW

AYDIN MONITOR SYSTEMS

CODE IDENT NO.	DWG NO.	REV
20747	PL356-0181-533	B
	SHEET 3 OF 6	

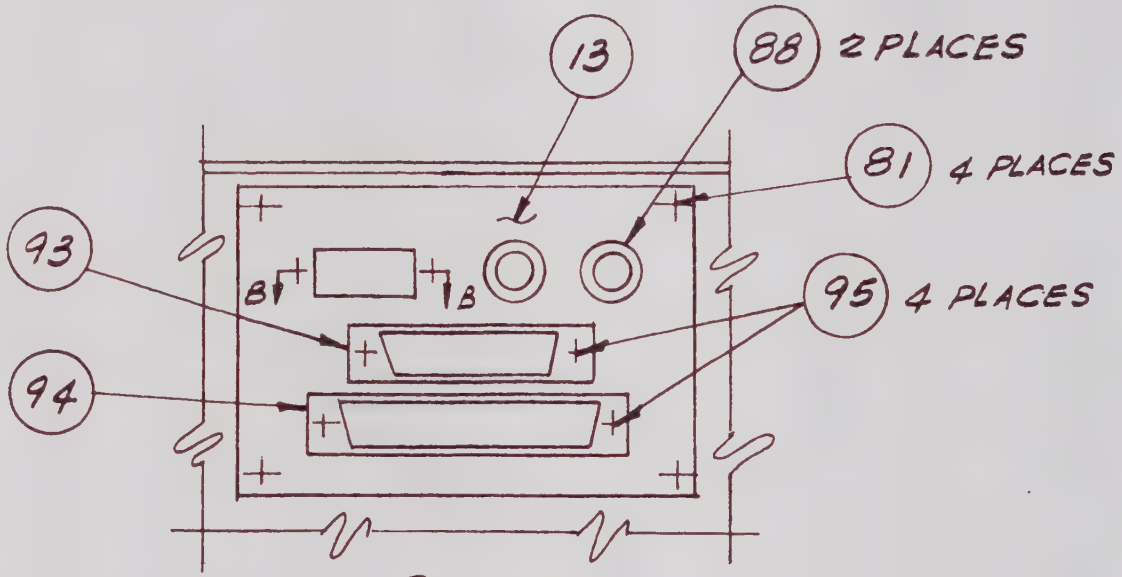

DETAIL A

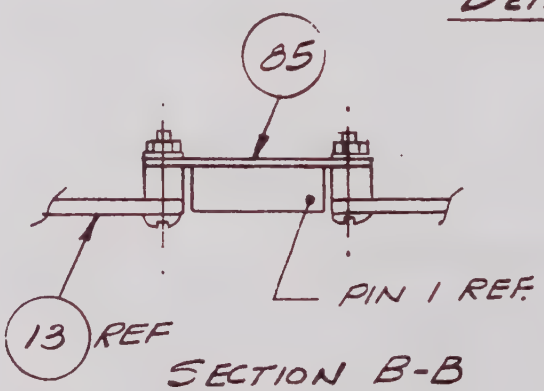

SECTION B-B

AYDIN MONITOR SYSTEMS

800-0133A

CODE IDENT NO.	DWG NO.	REV
20747	PL356-0181-533	B
	SHEET 4 OF 6	

PARTS LIST	DESIGN ACTIVITY IDENTIFICATION AYDIN COMPUTER AND MONITOR DIVISION HORSHAM, PA. 19044	CONTRACT NO. 6928	CAGE CODE 20747	PL356-0181-533	REV B

LIST TITLE T/A 335A-13-21-30	SUBCONTRACT NO.	SHEET NO. 5

FIND NO	QTY REQ	U/M	CAGE CODE	DOCUMENT NUMBER	PART OR IDENTIFYING NUMBER	NOMENCLATURE OR DESCRIPTION	NOTES
013	1	EA		207-0704-012	207-0704-012	PLATE CONN MTG	
017	1	EA	20747	124-013-001	124-013-001	NAMEPLATE SELF ADHES	
033	1	EA		216-0370-005	216-0370-005	DECAL CONN IDENT	
081	4	EA	96906	127-109-014	MS51957-14	SCR PAN HD 4-40X5\16	
084	1	EA	15912	108-273-110	622-1015	CONN CARD EDGE 10 POS	A1A17-P3
085	1	EA	20747	351-0412-501	351-0412-501	UNIT CODE 338 ASSY	S33
088	2	EA	14949	108-302-001	BJ-27	COAX BNC SOLDER PIN	J15 J19
089	1	EA	20747	354-0181-501	354-0181-501	335 ACC KIT	
093	1	EA	71468	108-100-006	DB-25S	CONN 25 SOCKET SOLD	J17
094	1	EA	71468	108-100-008	DC-37S	CONN 37 SOCKET SOLD	J20
095	4	PR	71468	108-104-045	D20418-2	CONN SCR LOCK FEMALE	
097	1	EA	20747	460-1982-503	460-1982-503	BSD001-3 SOFT BIT DEC	
098	1	EA	20747	460-1985-501	460-1985-501	LDR050-1	
100	1	EA	20747	470-0089-509	470-0089-509	T/A INF031-1 CARD ASSY	
101	1	EA	20747	356-0181-500	356-0181-500	MODEL 335A-STD	
				ID 353-0071		INSTALLATION DIAGRAM - RACK MTG	
				WL 730-2454		WIRE LIST - RS232/RS422 INTERFACE	
				WL 730-2475		WIRE LIST - 335A SOFT BIT DEC	
				AT 297-1180		ACCEPTANCE TEST PROCEDURE - MOD 335A PCM BIT SYNC	
				AT 297-1342		ACCEPTANCE TEST PROCEDURE - ATP MODEL 335A-13	

REVISIONS				
REV	DESCRIPTION		DATE	APPROVED
A	REV PER ECO 19412	PM	4-6-90	A. Kosh.
B	REV PER ECO 20106	PM	8-3-90	V. Polak

		CONTRACT NO.	
		DRAWN S. HORDESKI DATE 1-20-89	AYDIN COMPUTER AND MONITOR Division 700 DRESHER ROAD HORSHAM. PA 19044
		CHECKED 1/20/89	PCM BIT SYNCHRONIZER
		DRAFTING Tucker 1-23-89	TOP ASSEMBLY
		APPROVED 1/20/89	MODEL 335A-13
	4952-6401	APPROVED M.E. A. Volpe 1/29/89	SIZE A | CAGE CODE 20747 | DWG NO PL356-0181-534 | REV B
NEXT ASSY	USED ON	APPROVED PROJECT 1/31/89	SCALE NONE | SHEET 1 OF 6
APPLICATION			

800-0018E

800-0129 MONITOR SYSTEMS INC.

POSITION NO.		1	2	3	4	5	6	7	8	9	10	11	12	13	14	15	16
KEY AND CONNECTOR POSITIONS AND P.C. CARD TYPES	FILE A1								BSD 001-3								
	KEY								12/18								
	FILE A2																
	KEY																
	FILE A3																
	KEY																

POSITION NO.		17	18	19	20	21	22	23	24	25	26	27	28	29	30	31	32
KEY AND CONNECTOR POSITIONS AND P.C. CARD TYPES	FILE A1	INF 031					LDR 050-1		LDR 053-1								
	KEY	X					10/24		8/16								
	FILE A2																
	KEY																
	FILE A3																
	KEY																

ALL CARDS ARE KEYED 8/12 UNLESS OTHERWISE NOTED.

DRAWN	CHECKED	TITLE	CODE IDENT NO.	DWG. NO.	REV
S. HORDESKI		PCM BIT SYNCHRONIZER TOP ASSEMBLY MODEL 335A	20747	PL356-0181-534	B
DATE 1.20.89	DATE			SHEET 2 OF 6	

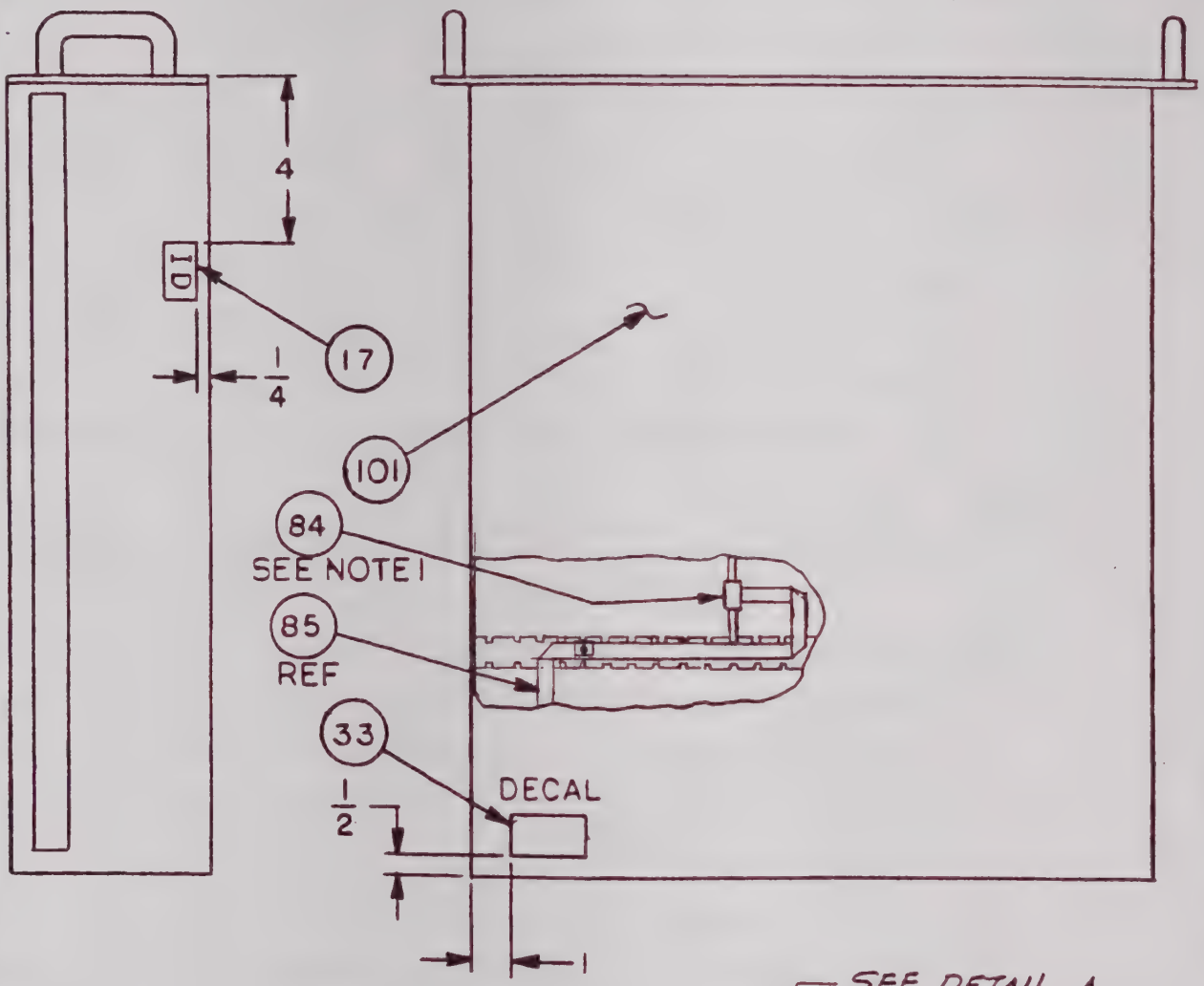

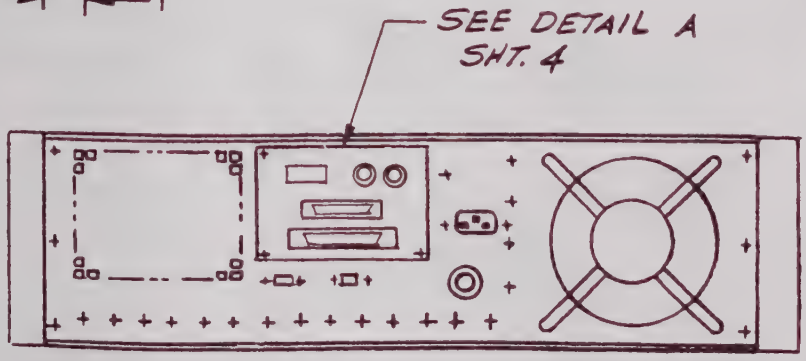

NOTES:

1. ASSEMBLE CONNECTOR, ITEM 84, TO SWITCH ASSY CABLE, ITEM 85, AFTER ROUTING CABLE.

REAR VIEW

AYDIN MONITOR SYSTEMS

CODE IDENT NO.	DWG NO.	REV
20747	PL356-0181-534	B
	SHEET 3 OF 6	

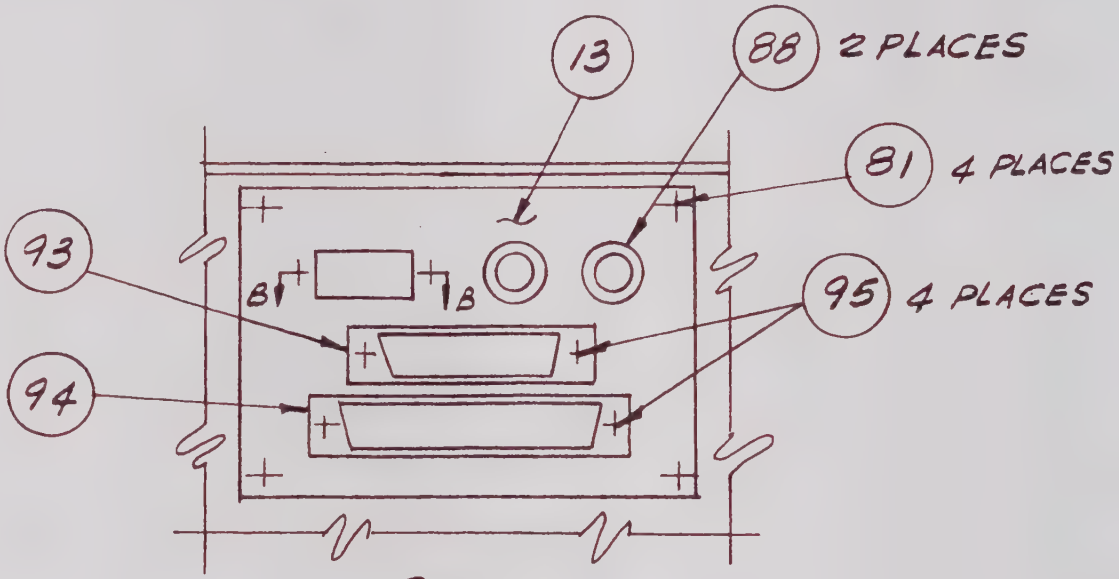

DETAIL A

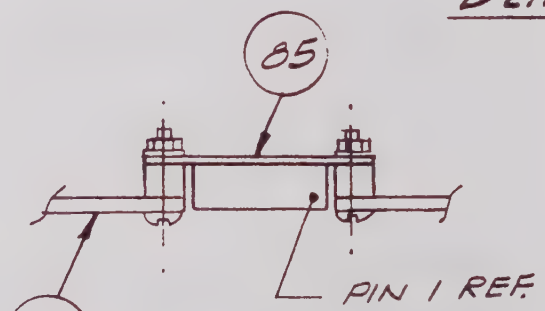

SECTION B-B

AYDIN MONITOR SYSTEMS

800-0153A

CODE IDENT NO.	DWG NO.	REV
20747	PL356-0181-534	B
	SHEET 4 OF 6	

PARTS LIST	DESIGN ACTIVITY IDENTIFICATION: AYDIN COMPUTER AND MONITOR DIVISION, HORSHAM, PA. 19044	CONTRACT NO. 6928	CAGE CODE 20747	PL356-0181-534	REV B

LIST TITLE	SUBCONTRACT NO.	SHEET NO.
T/A 335A-13-21-31		5

FIND NO	QTY REQ	U/M	CAGE CODE	DOCUMENT NUMBER	PART OR IDENTIFYING NUMBER	NOMENCLATURE OR DESCRIPTION	NOTES
013	1	EA		207-0704-012	207-0704-012	PLATE CONN MTG	
017	1	EA	20747	124-013-001	124-013-001	NAMEPLATE SELF ADHES	
033	1	EA		216-0370-016	216-0370-016	DECAL CONN IDENT	
081	4	EA	96906	127-109-014	MS51957-14	SCR PAN HD 4-40X5\16	
084	1	EA	15912	108-273-110	622-1015	CONN CARD EDGE 10 POS	A1A17-P3
085	1	EA	20747	351-0412-501	351-0412-501	UNIT CODE 338 ASSY	S33
088	2	EA	14949	108-302-001	BJ-27	COAX BNC SOLDER PIN	J15 J19
089	1	EA	20747	354-0181-501	354-0181-501	335 ACC KIT	
093	1	EA	71468	108-100-006	DB-25S	CONN 25 SOCKET SOLD	J17
094	1	EA	71468	108-100-008	DC-37S	CONN 37 SOCKET SOLD	J20
095	4	PR	71468	108-104-045	D20418-2	CONN SCR LOCK FEMALE	
096	1	EA	20747	460-2058-501	460-2058-501	CARD ASSY LDR053-1	
097	1	EA	20747	460-1982-503	460-1982-503	BSD001-3 SOFT BIT DEC	
098	1	EA	20747	460-1985-501	460-1985-501	LDR050-1	
100	1	EA	20747	470-0089-509	470-0089-509	T/A INF031-1 CARD ASSY	
101	1	EA	20747	356-0181-500	356-0181-500	MODEL 335A-STD	
				ID 353-0071		INSTALLATION DIAGRAM - RACK MTG	
				WL 730-2454		WIRE LIST - RS232/RS422 INTERFACE	
				WL 730-2475		WIRE LIST - 335A SOFT BIT DEC	
				AT 297-1180		ACCEPTANCE TEST PROCEDURE - MOD 335A PCM BIT SYNC	
				WL 730-2492		WIRE LIST - MD 335A RNRZ-L OUTPUT	
				AT 297-1342		ACCEPTANCE TEST PROCEDURE - ATP MODEL 335A-13	- -

REVISIONS			
REV	DESCRIPTION	DATE	APPROVED
A	REV PER ECO 19411 PM	4-6-90	
B	REV PER ECO 20106 PM	8-3-90	V. Polly

		CONTRACT NO.	
		DRAWN S. HORDESKI DATE 1-20-89	AYDIN COMPUTER AND MONITOR Division 700 DRESHER ROAD HORSHAM, PA 19044
		CHECKED 1/20/89	PCM BIT SYNCHRONIZER TOP ASSEMBLY MODEL 335A-13
		DRAFTING 1-23-89	
	4952-6401	APPROVED 1/20/89	SIZE A | CAGE CODE 20747 | DWG NO PL356-0181-535 | REV B
NEXT ASSY	USED ON	APPROVED M.E. 1/29/89	
APPLICATION		APPROVED PROJECT 1/31/89	SCALE NONE | SHEET 1 OF 6

800-0016E

800-0129 MONITOR SYSTEMS INC.

POSITION NO.		1	2	3	4	5	6	7	8	9	10	11	12	13	14	15	16
KEY AND CONNECTOR POSITIONS AND P.C. CARD TYPES	FILE A1								BSD 001-3								
	KEY								12/18								
	FILE A2																
	KEY																
	FILE A3																
	KEY																

POSITION NO.		17	18	19	20	21	22	23	24	25	26	27	28	29	30	31	32
KEY AND CONNECTOR POSITIONS AND P.C. CARD TYPES	FILE A1	INF 031					LDR 050-1										
	KEY	X					10/24										
	FILE A2																
	KEY																
	FILE A3																
	KEY																

ALL CARDS ARE KEYED 8/12 UNLESS OTHERWISE NOTED.

DRAWN	CHECKED	TITLE	CODE IDENT NO.	DWG. NO.	REV
S. HORDESKI		PCM BIT SYNCHRONIZER	20747	PL356-0181-535	B
DATE 1.20.89	DATE	TOP ASSEMBLY MODEL 335A		SHEET 2 OF 6	

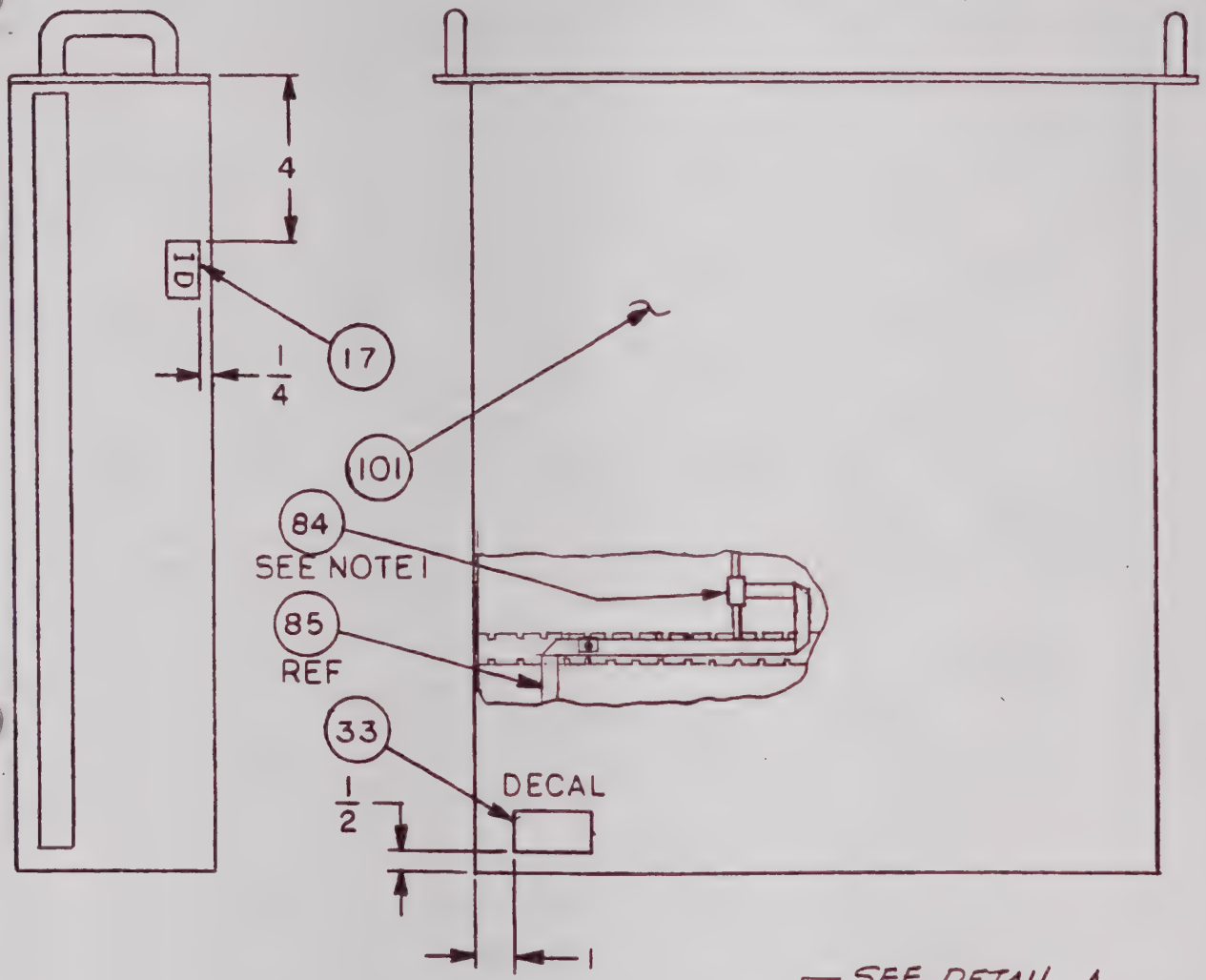

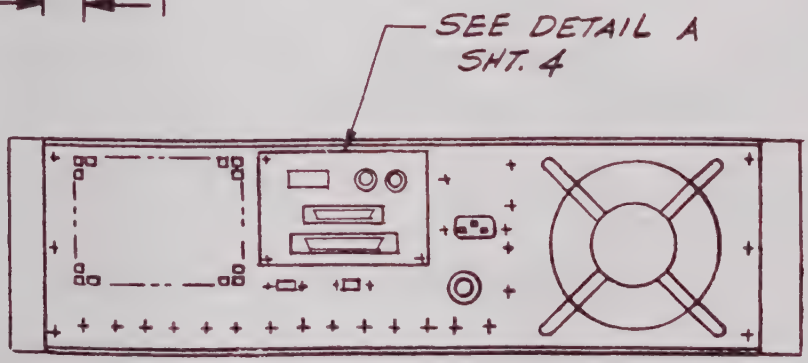

NOTES:

1. ASSEMBLE CONNECTOR, ITEM 84, TO SWITCH ASSY CABLE, ITEM 85, AFTER ROUTING CABLE.

REAR VIEW

CODE IDENT NO.	DWG NO.	REV
20747	PL356-0181-535	B
	SHEET 3 OF 6	

AYDIN MONITOR SYSTEMS

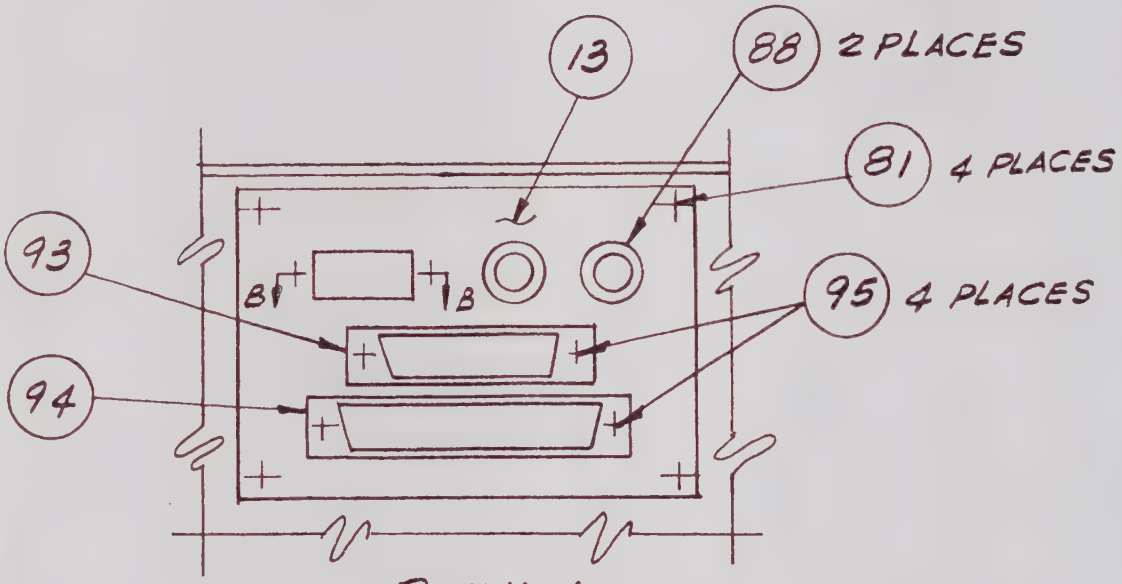

DETAIL A

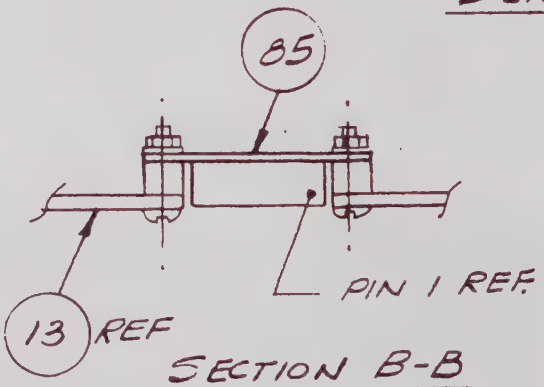

SECTION B-B

AYDIN MONITOR SYSTEMS

00-0153-A

CODE IDENT NO.	DWG NO.	REV
20747	PL356-0181-535	B
	SHEET 4 OF 6	

PARTS LIST	DESIGN ACTIVITY IDENTIFICATION AYDIN COMPUTER AND MONITOR DIVISION HORSHAM, PA. 19044	CONTRACT NO. 5110	CAGE CODE 20747	PL356-0181-535	REV B

LIST TITLE T/A 335A-13-21-32	SUBCONTRACT NO.		SHEET NO. 5

FIND NO	QTY REQ	U/M	CAGE CODE	DOCUMENT NUMBER	PART OR IDENTIFYING NUMBER	NOMENCLATURE OR DESCRIPTION	NOTES
013	1	EA		207-0704-012	207-0704-012	PLATE CONN MTG	
017	1	EA	20747	124-013-001	124-013-001	NAMEPLATE SELF ADHES	
033	1	EA		216-0370-005	216-0370-005	DECAL CONN IDENT	
081	4	EA	96906	127-109-014	MS51957-14	SCR PAN HD 4-40X5\16	
084	1	EA	15912	108-273-110	622-1015	CONN CARD EDGE 10 POS	A1A17-P3
085	1	EA	20747	351-0412-501	351-0412-501	UNIT CODE 338 ASSY	S33
088	2	EA	14949	108-302-001	BJ-27	COAX BNC SOLDER PIN	J15 J19
089	1	EA	20747	354-0181-501	354-0181-501	335 ACC KIT	
093	1	EA	71468	108-100-006	DB-25S	CONN 25 SOCKET SOLD	J17
094	1	EA	71468	108-100-008	DC-37S	CONN 37 SOCKET SOLD	J20
095	4	PR	71468	108-104-045	D20418-2	CONN SCR LOCK FEMALE	
097	1	EA	20747	460-1982-503	460-1982-503	BSD001-3 SOFT BIT DEC	
098	1	EA	20747	460-1985-501	460-1985-501	LDR050-1	
100	1	EA	20747	470-0089-509	470-0089-509	T/A INF031-1 CARD ASSY	
101	1	EA	20747	356-0181-500	356-0181-500	MODEL 335A-STD	
				ID 353-0071		INSTALLATION DIAGRAM - RACK MTG	
				WL 730-2454		WIRE LIST - RS232/RS422 INTERFACE	
				WL 730-2475		WIRE LIST - 335A SOFT BIT DEC	
				AT 297-1180		ACCEPTANCE TEST PROCEDURE - MOD 335A PCM BIT SYNC	
				AT 297-1342		ACCEPTANCE TEST PROCEDURE - ATP MODEL 335A-13	

PL356-0181-535 B
SHEET 5

REVISIONS			
REV	DESCRIPTION	DATE	APPROVED
A	REV PER ECO 19410 PM	4·6·90	[illegible]
B	REV PER ECO 201016 PM	8·3·90	V. [illegible]

		CONTRACT NO.
		DRAWN S. HORDESKI DATE 1·20·89
		CHECKED [illegible] 1/20/89
		DRAFTING [illegible] 1-23-89
	4952-6401	APPROVED [illegible] 1/20/89
NEXT ASSY	USED ON	APPROVED M.E. [illegible] 1/29/89
APPLICATION		APPROVED PROJECT [illegible] 1/31/89

AYDIN COMPUTER AND MONITOR Division
700 DRESHER ROAD HORSHAM, PA 19044

PCM BIT SYNCHRONIZER
TOP ASSEMBLY
MODEL 335A-13

SIZE	CAGE CODE	DWG NO	REV
A	20747	PL356-0181-536	B
SCALE 4		SHEET 1 OF 6	

800-0018E

800-0129 MONITOR SYSTEMS INC

POSITION NO.		1	2	3	4	5	6	7	8	9	10	11	12	13	14	15	16
KEY AND CONNECTOR POSITIONS AND P.C. CARD TYPES	FILE A1								BSD 001-2								
	KEY								12/18								
	FILE A2																
	KEY																
	FILE A3																
	KEY																

POSITION NO.		17	18	19	20	21	22	23	24	25	26	27	28	29	30	31	32
KEY AND CONNECTOR POSITIONS AND P.C. CARD TYPES	FILE A1	INF 031					LDR 050-1										
	KEY	X					10/24										
	FILE A2																
	KEY																
	FILE A3																
	KEY																

ALL CARDS ARE KEYED 8/12 UNLESS OTHERWISE NOTED.

DRAWN	CHECKED	TITLE	CODE IDENT NO.	DWG. NO.	REV
S. HORDESKI		PCM BIT SYNCHRONIZER TOP ASSEMBLY MODEL 335A	20747	PL 356-0181-536	B
DATE 1.20.89	DATE			SHEET 2 OF 6	

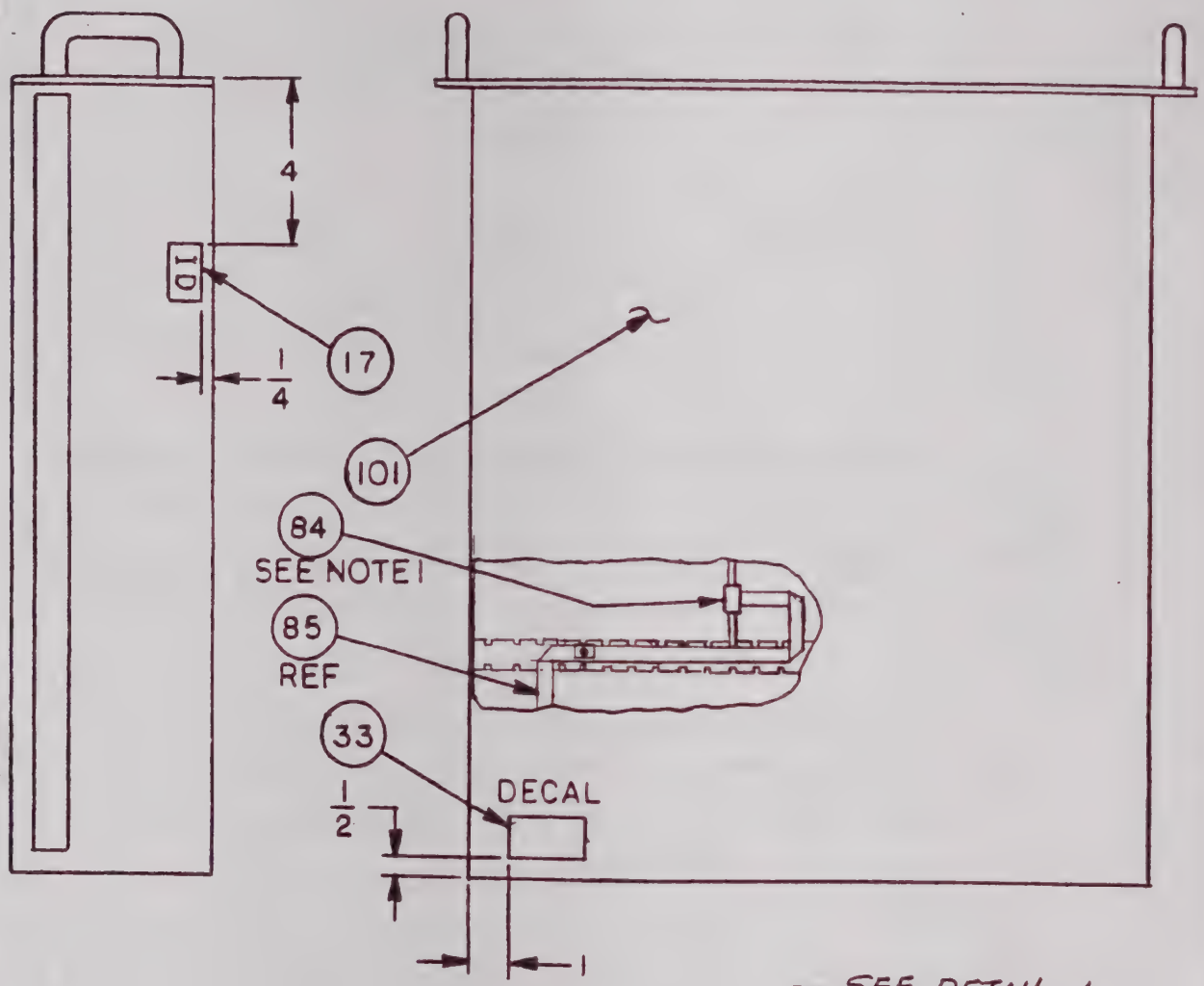

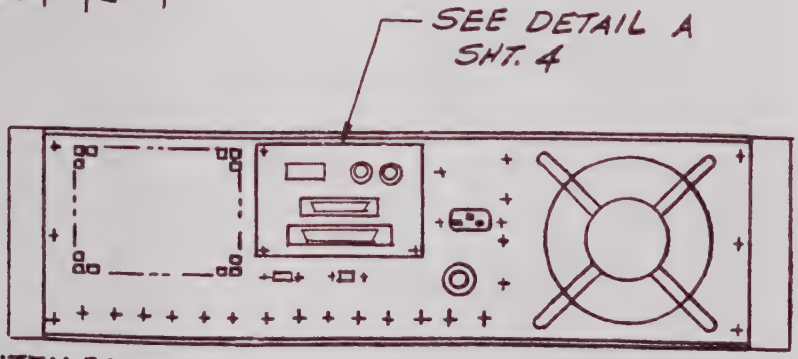

NOTES:

1. ASSEMBLE CONNECTOR, ITEM 84, TO SWITCH ASSY CABLE, ITEM 85, AFTER ROUTING CABLE.

REAR VIEW

AYDIN MONITOR SYSTEMS

CODE IDENT NO.	DWG NO.	REV
20747	PL 356-0181-536	B
	SHEET 3 OF 6	

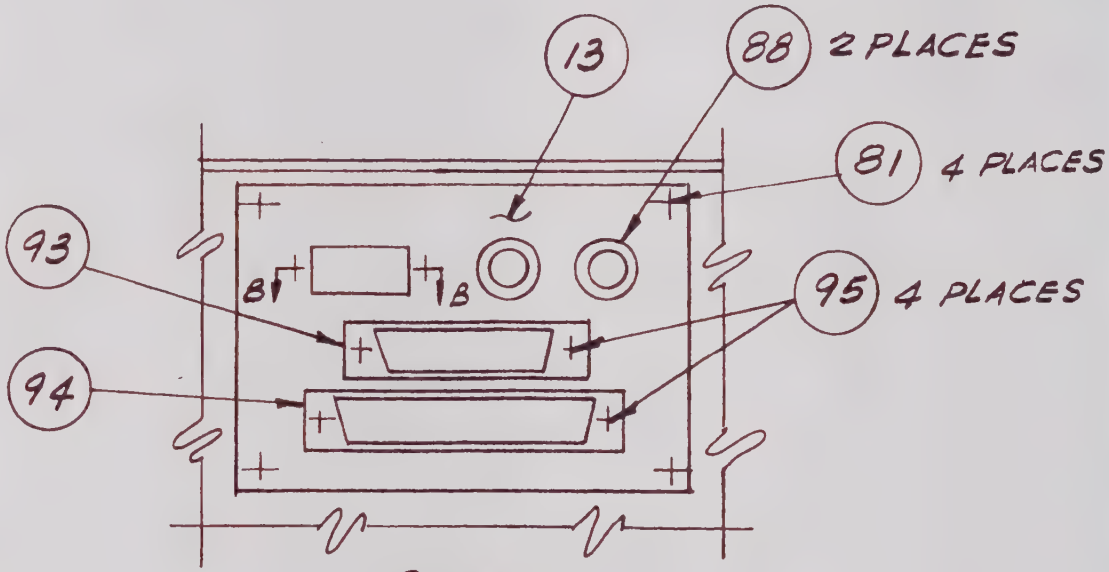

DETAIL A

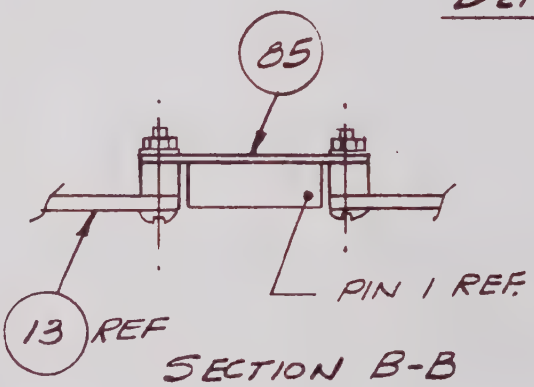

SECTION B-B

AYDIN MONITOR SYSTEMS

800-0153A

CODE IDENT NO.	DWG NO.	REV
20747	PL356-0181-536	B
	SHEET 4 OF 6	

PARTS LIST	DESIGN ACTIVITY IDENTIFICATION AYDIN COMPUTER AND MONITOR DIVISION HORSHAM, PA. 19044	CONTRACT NO. 6928	CAGE CODE 20747	PL356-0181-536	REV B

LIST TITLE T/A 335A-13-22-30	SUBCONTRACT NO.		SHEET NO. 5

FIND NO	QTY REQ	U/M	CAGE CODE	DOCUMENT NUMBER	PART OR IDENTIFYING NUMBER	NOMENCLATURE OR DESCRIPTION	NOTES
013	1	EA		207-0704-012	207-0704-012	PLATE CONN MTG	
017	1	EA	20747	124-013-001	124-013-001	NAMEPLATE SELF ADHES	
033	1	EA		216-0370-012	216-0370-012	DECAL CONN IDENT	
081	4	EA	96906	127-109-014	MS51957-14	SCR PAN HD 4-40X5\16	
084	1	EA	15912	108-273-110	622-1015	CONN CARD EDGE 10 POS	A1A17-P3
085	1	EA	20747	351-0412-501	351-0412-501	UNIT CODE 338 ASSY	S33
088	2	EA	14949	108-302-001	BJ-27	COAX BNC SOLDER PIN	J15 J19
089	1	EA	20747	354-0181-501	354-0181-501	335 ACC KIT	
093	1	EA	71468	108-100-006	DB-25S	CONN 25 SOCKET SOLD	J17
094	1	EA	71468	108-100-008	DC-37S	CONN 37 SOCKET SOLD	J20
095	4	PR	71468	108-104-045	D20418-2	CONN SCR LOCK FEMALE	
097	1	EA	20747	460-1982-502	460-1982-502	BSD001-2 DATA QUALITY	
098	1	EA	20747	460-1985-501	460-1985-501	LDR050-1	
100	1	EA	20747	470-0089-509	470-0089-509	T/A INF031-1 CARD ASSY	
101	1	EA	20747	356-0181-500	356-0181-500	MODEL 335A-STD	
				ID 353-0071		INSTALLATION DIAGRAM - RACK MTG	
				WL 730-2454		WIRE LIST - RS232/RS422 INTERFACE	
				AT 297-1180		ACCEPTANCE TEST PROCEDURE - MOD 335A PCM BIT SYNC	
				WL 730-2481		WIRE LIST - 335A DATA QUALITY	
				AT 297-1342		ACCEPTANCE TEST PROCEDURE - ATP MODEL 335A-13	

PL356-0181-536 B
SHEET 5

REVISIONS			
REV	DESCRIPTION	DATE	APPROVED
A	REV PER ECO 19409 PM	4-6-90	L. Koch.
B	REV PER ECO 20106 P.M	8-3-90	V. Pohly

		CONTRACT NO.
		DRAWN S. HORDESKI DATE 1-20-89
		CHECKED 1/20/89
		DRAFTING 1-23-89
		APPROVED 1/20/89
	4952-6401	APPROVED M.E. J. Volpe 1/29/89
NEXT ASSY	USED ON	APPROVED PRODUCT 1/31/89
APPLICATION		

800-0018E

AYDIN COMPUTER AND MONITOR Division
700 DRESHER ROAD HORSHAM. PA 19044

PCM BIT SYNCHRONIZER
TOP ASSEMBLY
MODEL 335A-13

SIZE	CAGE CODE	DWG NO	REV
A	20747	PL356-0181-537	B

SCALE NONE SHEET 1 OF 6

800-0129 MONITOR SYSTEMS INC.

POSITION NO.		1	2	3	4	5	6	7	8	9	10	11	12	13	14	15	16
KEY AND CONNECTOR POSITIONS AND P.C. CARD TYPES	FILE A1								BSD 001-2								
	KEY								12/18								
	FILE A2																
	KEY																
	FILE A3																
	KEY																

POSITION NO.		17	18	19	20	21	22	23	24	25	26	27	28	29	30	31	32
KEY AND CONNECTOR POSITIONS AND P.C. CARD TYPES	FILE A1	INF 031					LDR 050-1		LDR 053-1								
	KEY	X					10/24		8/16								
	FILE A2																
	KEY																
	FILE A3																
	KEY																

ALL CARDS ARE KEYED 8/12 UNLESS OTHERWISE NOTED.

DRAWN	CHECKED	TITLE	CODE IDENT NO.	DWG. NO.	REV
S. HORDESKI		PCM BIT SYNCHRONIZER TOP ASSEMBLY MODEL 335A	20747	PL356-0181-537	B
DATE 1.20.89	DATE			SHEET 2 OF 6	

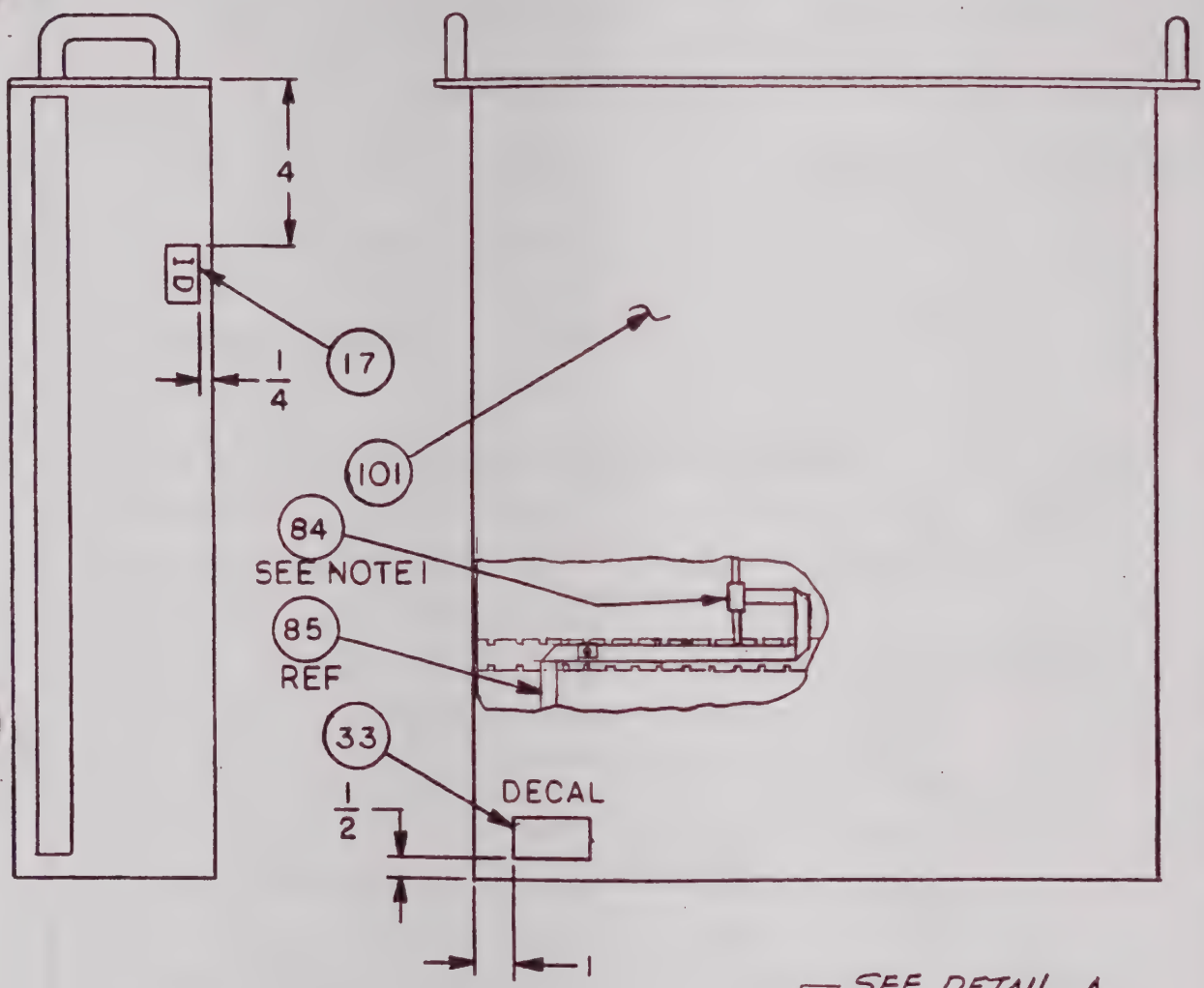

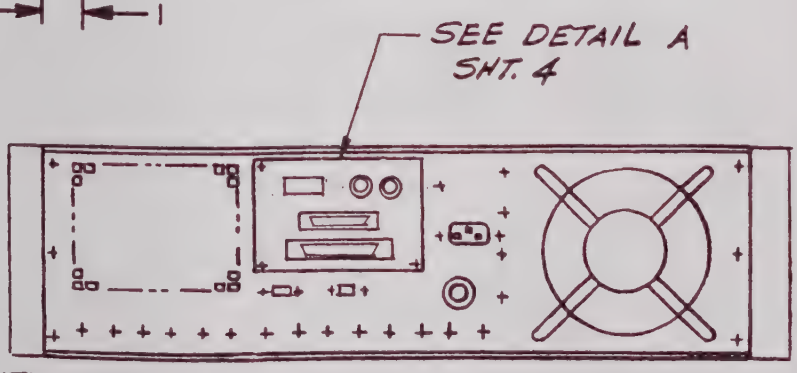

NOTES:

1. ASSEMBLE CONNECTOR, ITEM 84, TO SWITCH ASSY CABLE, ITEM 85, AFTER ROUTING CABLE.

REAR VIEW

CODE IDENT NO.	DWG NO.	REV
20747	PL356-0181-537	B
	SHEET 3 OF 6	

AYDIN MONITOR SYSTEMS

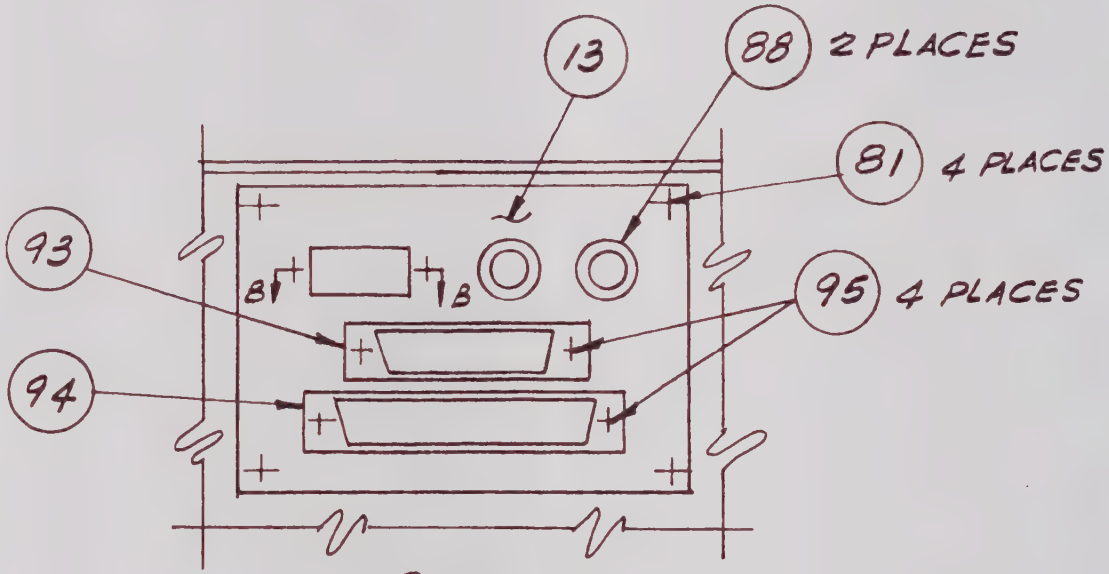

DETAIL A

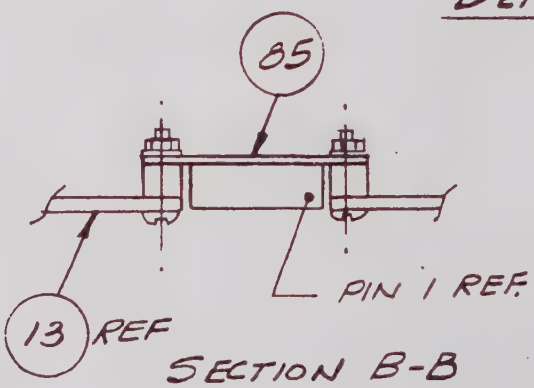

SECTION B-B

AYDIN MONITOR SYSTEMS

800-0153 A

CODE IDENT NO.	DWG NO.	REV
20747	PL356-0181-537	B
	SHEET 4 OF 6	

PARTS LIST	DESIGN ACTIVITY IDENTIFICATION: AYDIN COMPUTER AND MONITOR DIVISION, HORSHAM, PA. 19044	CONTRACT NO. 6928	CAGE CODE 20747	PL356-0181-537	REV B

LIST TITLE	SUBCONTRACT NO.		SHEET NO.
T/A 335A-13-22-31			5

FIND NO	QTY REQ	U/M	CAGE CODE	DOCUMENT NUMBER	PART OR IDENTIFYING NUMBER	NOMENCLATURE OR DESCRIPTION	NOTES
013	1	EA		207-0704-012	207-0704-012	PLATE CONN MTG	
017	1	EA	20747	124-013-001	124-013-001	NAMEPLATE SELF ADHES	
033	1	EA		216-0370-019	216-0370-019	DECAL CONN IDENT	
081	4	EA	96906	127-109-014	MS51957-14	SCR PAN HD 4-40X5\16	
084	1	EA	15912	108-273-110	622-1015	CONN CARD EDGE 10 POS	A1A17-P3
085	1	EA	20747	351-0412-501	351-0412-501	UNIT CODE 338 ASSY	S33
088	2	EA	14949	108-302-001	BJ-27	COAX BNC SOLDER PIN	J15 J19
089	1	EA	20747	354-0181-501	354-0181-501	335 ACC KIT	
093	1	EA	71468	108-100-006	DB-25S	CONN 25 SOCKET SOLD	J17
094	1	EA	71468	108-100-008	DC-37S	CONN 37 SOCKET SOLD	J20
095	4	PR	71468	108-104-045	D20418-2	CONN SCR LOCK FEMALE	
096	1	EA	20747	460-2058-501	460-2058-501	CARD ASSY LDR053-1	
097	1	EA	20747	460-1982-502	460-1982-502	BSD001-2 DATA QUALITY	
098	1	EA	20747	460-1985-501	460-1985-501	LDR050-1	
100	1	EA	20747	470-0089-509	470-0089-509	T/A INF031-1 CARD ASSY	
101	1	EA	20747	356-0181-500	356-0181-500	MODEL 335A-STD	
				ID 353-0071		INSTALLATION DIAGRAM - RACK MTG	
				WL 730-2454		WIRE LIST - RS232/RS422 INTERFACE	
				AT 297-1180		ACCEPTANCE TEST PROCEDURE - MOD 335A PCM BIT SYNC	
				WL 730-2481		WIRE LIST - 335A DATA QUALITY	
				WL 730-2492		WIRE LIST - MD 335A RNRZ-L OUTPUT	
				AT 297-1342		ACCEPTANCE TEST PROCEDURE - ATP MODEL 335A-13	

REVISIONS			
REV	DESCRIPTION	DATE	APPROVED
A	REV PER ECO 19408 P.M	4.6.90	[illegible]
B	REV PER ECO 19[illegible] P.M	4.26.90	[illegible]
C	REV PER ECO 20106 PM	8-3-90	V. Polsky

		CONTRACT NO.	AYDIN COMPUTER AND MONITOR Division 700 DRESHER ROAD HORSHAM, PA 19044
		DRAWN S. HORDESKI DATE 1-20-89	PCM BIT SYNCHRONIZER TOP ASSEMBLY MODEL 335A-13
		CHECKED [illegible] 1/20/89	
		DRAFTING [illegible] 1-23-89	
		APPROVED [illegible] 1/20/89	
	4952-6401	APPROVED M.E. [illegible] 1/29/89	SIZE A · CAGE CODE 20747 · DWG NO PL356-0181-538 · REV C
NEXT ASSY	USED ON	APPROVED PROJECT [illegible] 1/31/89	SCALE 2/1 · SHEET 1 OF 6
APPLICATION			

800-0016E

800-0129 MONITOR SYSTEMS INC.

POSITION NO.		1	2	3	4	5	6	7	8	9	10	11	12	13	14	15	16
KEY AND CONNECTOR POSITIONS AND P.C. CARD TYPES	FILE A1								BSD 001-2								
	KEY								12/18								
	FILE A2																
	KEY																
	FILE A3																
	KEY																

POSITION NO.		17	18	19	20	21	22	23	24	25	26	27	28	29	30	31	32
KEY AND CONNECTOR POSITIONS AND P.C. CARD TYPES	FILE A1	INF 031					LDR 050-1										
	KEY	X					10/24										
	FILE A2																
	KEY																
	FILE A3																
	KEY																

ALL CARDS ARE KEYED 8/12 UNLESS OTHERWISE NOTED.

DRAWN	CHECKED	TITLE	CODE IDENT NO.	DWG. NO.	REV
S. HORDESKI		PCM BIT SYNCHRONIZER TOP ASSEMBLY MODEL 335A	20747	PL356-0181-538	C
DATE 1.20.89	DATE			SHEET 2 OF 6	

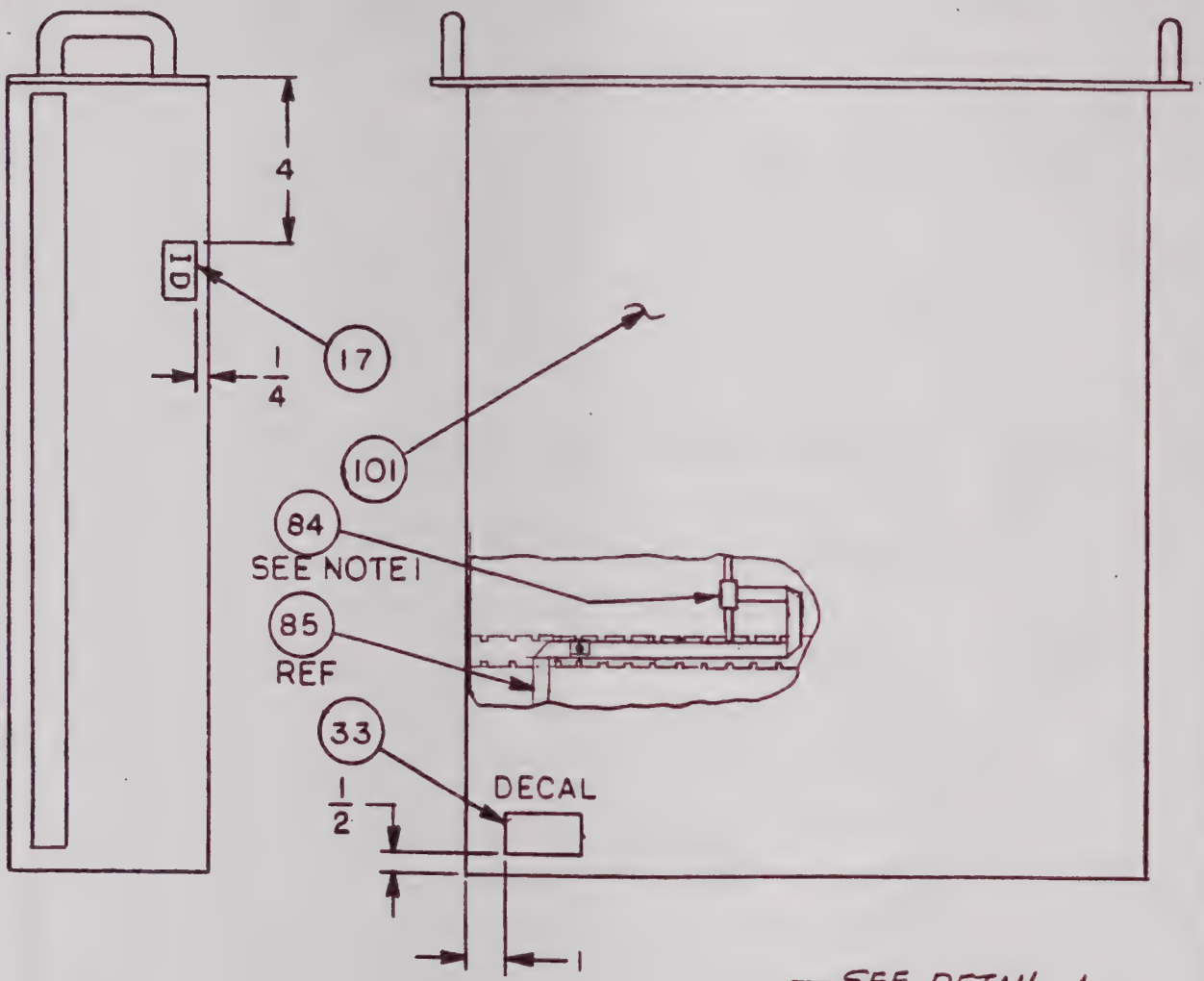

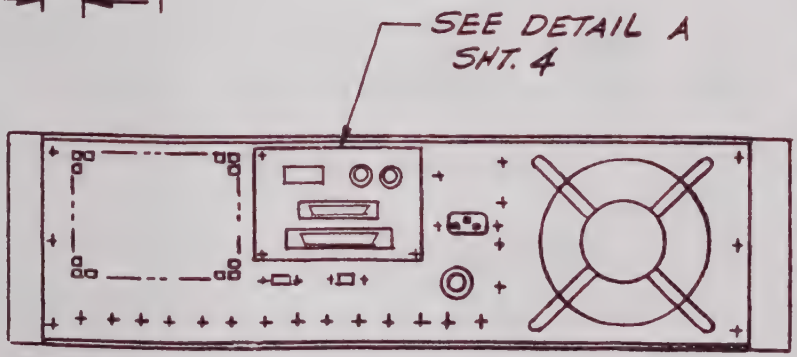

NOTES:

1. ASSEMBLE CONNECTOR, ITEM 84, TO SWITCH ASSY CABLE, ITEM 85, AFTER ROUTING CABLE.

REAR VIEW

CODE IDENT NO.	DWG NO.	REV
20747	PL 356-0181-538	C
	SHEET 3 OF 6	

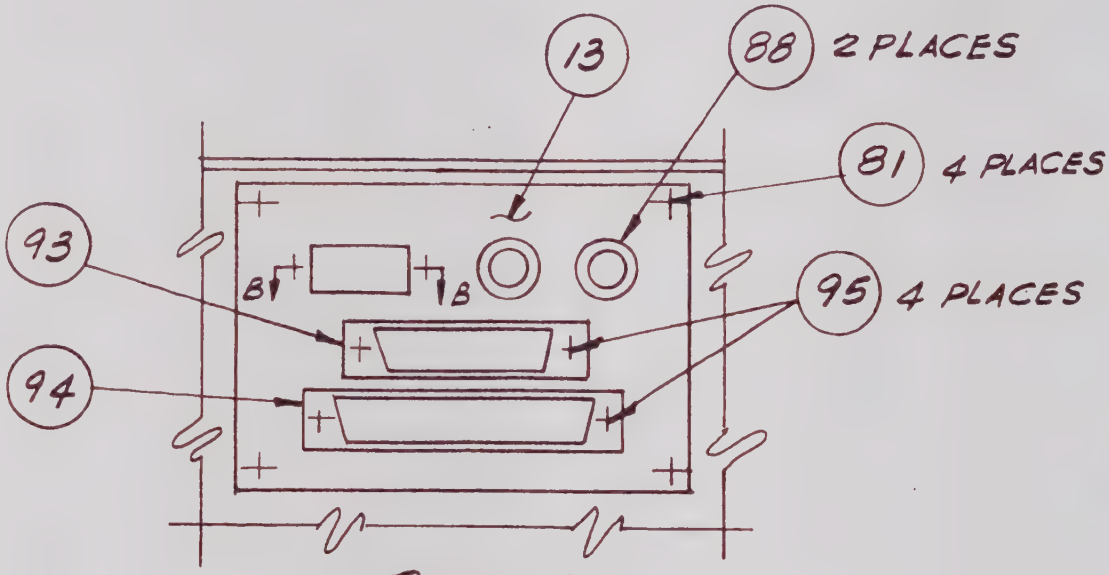

DETAIL A

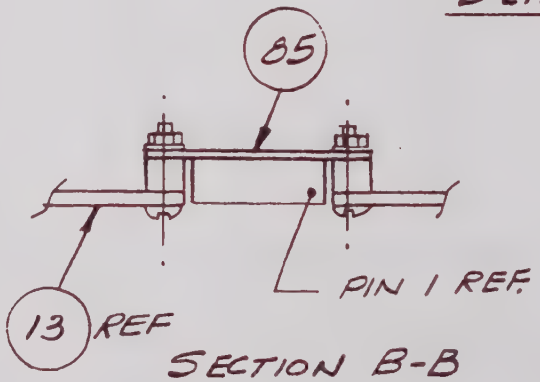

SECTION B-B

AYDIN MONITOR SYSTEMS

800-0153A

CODE IDENT NO.	DWG NO.	REV
20747	PL356-0181-538	C
	SHEET 4 OF 6	

PARTS LIST	DESIGN ACTIVITY IDENTIFICATION AYDIN COMPUTER AND MONITOR DIVISION HORSHAM, PA. 19044	CONTRACT NO. 6928	CAGE CODE 20747	PL356-0181-538	REV C

LIST TITLE T/A 335A-13-22-32	SUBCONTRACT NO.		SHEET NO. 5

FIND NO	QTY REQ	U/M	CAGE CODE	DOCUMENT NUMBER	PART OR IDENTIFYING NUMBER	NOMENCLATURE OR DESCRIPTION	NOTES
013	1	EA		207-0704-012	207-0704-012	PLATE CONN MTG	
017	1	EA	20747	124-013-001	124-013-001	NAMEPLATE SELF ADHES	
033	1	EA		216-0370-012	216-0370-012	DECAL CONN IDENT	
081	4	EA	96906	127-109-014	MS51957-14	SCR PAN HD 4-40X5\16	
084	1	EA	15912	108-273-110	622-1015	CONN CARD EDGE 10 POS	A1A17-P3
085	1	EA	20747	351-0412-501	351-0412-501	UNIT CODE 338 ASSY	S33
088	2	EA	14949	108-302-001	BJ-27	COAX BNC SOLDER PIN	J15 J19
089	1	EA	20747	354-0181-501	354-0181-501	335 ACC KIT	
093	1	EA	71468	108-100-006	DB-25S	CONN 25 SOCKET SOLD	J17
094	1	EA	71468	108-100-008	DC-37S	CONN 37 SOCKET SOLD	J20
095	4	PR	71468	108-104-045	D20418-2	CONN SCR LOCK FEMALE	
097	1	EA	20747	460-1982-502	460-1982-502	BSD001-2 DATA QUALITY	
098	1	EA	20747	460-1985-501	460-1985-501	LDR050-1	
100	1	EA	20747	470-0089-509	470-0089-509	T/A INF031-1 CARD ASSY	
101	1	EA	20747	356-0181-500	356-0181-500	MODEL 335A-STD	
				ID 353-0071		INSTALLATION DIAGRAM - RACK MTG	
				WL 730-2454		WIRE LIST - RS232/RS422 INTERFACE	
				AT 297-1180		ACCEPTANCE TEST PROCEDURE - MOD 335A PCM BIT SYNC	
				WL 730-2481		WIRE LIST - 335A DATA QUALITY	
				AT 297-1342		ACCEPTANCE TEST PROCEDURE - ATP MODEL 335A-13	

PL356-0181-538 C
SHEET 5

REVISIONS			
REV	DESCRIPTION	DATE	APPROVED
A	REV PER ECO 20106 PM	8-3-90	V. Polsky

		CONTRACT NO.	
		DRAWN S. HORDESKI DATE 1-20-89	AYDIN COMPUTER AND MONITOR Division 700 DRESHER ROAD HORSHAM, PA 19044
		CHECKED 1/20/89	PCM BIT SYNCHRONIZER TOP ASSEMBLY MODEL 335A-1Ø
		DRAFTING 1-23-89	
	4952-6401	APPROVED 1/20/89	SIZE A · CAGE CODE 20747 · DWG NO PL356-0181-540 · REV A
NEXT ASSY	USED ON	APPROVED M.E. 1/29/89	
APPLICATION		APPROVED PROJECT 1/31/89	SCALE N · SHEET 1 OF 5

800-0018E

800-0129 MONITOR SYSTEMS INC.

KEY AND CONNECTOR POSITIONS AND P.C. CARD TYPES	POSITION NO.	1	2	3	4	5	6	7	8	9	10	11	12	13	14	15	16
	FILE A1																
	KEY	/	/	/	/	/	/	/	/	/	/	/	/	/	/	/	/
	FILE A2																
	KEY	/	/	/	/	/	/	/	/	/	/	/	/	/	/	/	/
	FILE A3																
	KEY	/	/	/	/	/	/	/	/	/	/	/	/	/	/	/	/

KEY AND CONNECTOR POSITIONS AND P.C. CARD TYPES	POSITION NO.	17	18	19	20	21	22	23	24	25	26	27	28	29	30	31	32
	FILE A1	INF 043-1							LDR 053-1								
	KEY	X	/	/	/	/	/	/	8/16	/	/	/	/	/	/	/	/
	FILE A2																
	KEY	/	/	/	/	/	/	/	/	/	/	/	/	/	/	/	/
	FILE A3																
	KEY	/	/	/	/	/	/	/	/	/	/	/	/	/	/	/	/

ALL CARDS ARE KEYED 8/12 UNLESS OTHERWISE NOTED.

DRAWN	CHECKED	TITLE	CODE IDENT NO.	DWG. NO.	REV
S. HORDESKI DATE 1.20.89	DATE	PCM BIT SYNCHRONIZER TOP ASSEMBLY MODEL 335A	20747	PL 356-0181-540 SHEET 2 OF	A

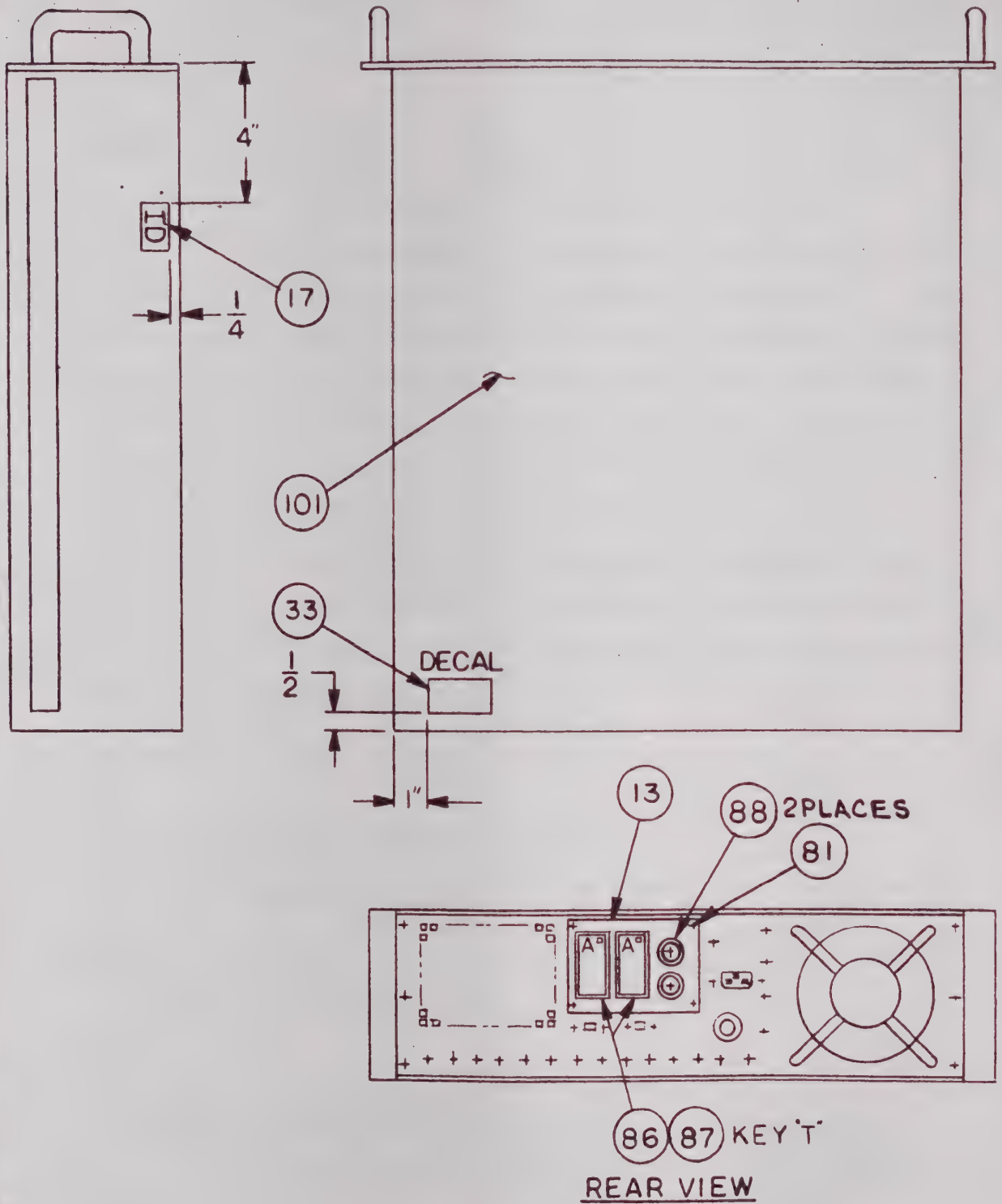

AYDIN MONITOR SYSTEMS

800-0155/

CODE IDENT NO.	DWG NO.	REV
20747	PL356-0181-540	A
	SHEET 3 OF 5	

PARTS LIST	DESIGN ACTIVITY IDENTIFICATION AYDIN COMPUTER AND MONITOR DIVISION HORSHAM, PA. 19044	CONTRACT NO. 6928	CAGE CODE 20747	PL356-0181-540	REV A

LIST TITLE 335A-10-20-31-907	SUBCONTRACT NO.	SHEET NO. 4

FIND NO	QTY REQ	U/M	CAGE CODE	DOCUMENT NUMBER	PART OR IDENTIFYING NUMBER	NOMENCLATURE OR DESCRIPTION	NOTES
013	1	EA		207-0704-004	207-0704-004	PLATE CONN MTG	
017	1	EA	20747	124-013-001	124-013-001	NAMEPLATE SELF ADHES	
033	1	EA		216-0370-015	216-0370-015	DECAL CONN IDENT	
081	4	EA	96906	127-109-014	MS51957-14	SCR PAN HD 4-40X5\16	
086	2	EA	20747	108-101-010	108-101-010	CONNECTOR 34 POS MALE	J17 J18
087	68	EA	00779	108-101-108	108-101-118	CONN PIN CONT 26-24	
088	2	EA	14949	108-302-001	BJ-27	COAX BNC SOLDER PIN	J15 J19
089	1	EA	20747	354-0181-502	354-0181-502	335 ACC	
093	1	EA	20747	460-2058-501	460-2058-501	CARD ASSY LDR053-1	
100	1	EA	20747	460-1990-501	460-1990-501	CARD ASSY INF043-1	
101	1	EA	20747	356-0181-500	356-0181-500	MODEL 335A-STD	
				ID 353-0071		INSTALLATION DIAGRAM - RACK MTG	
				WL 730-2423		WIRE LIST - 16 BIT INTERFACE	
				AT 297-1180		ACCEPTANCE TEST PROCEDURE - MOD 335A PCM BIT SYNC	
				WL 730-2492		WIRE LIST - MD 335A RNRZ-L OUTPUT	

PL356-0181-540 A
SHEET 4

ZONE	LTR	REVISIONS DESCRIPTION	DATE	APPROVED
	B	REVISED PER ECO 14105	3/17/87	
	C	REVISED PER ECO 15406	4/24/87	
	–	ADDED -502 ASSY	11-12-87	
	D	REVISED PER ECO 15980 DTG 2-10-88	2/10/88	
	–	ADDED -503 ASSY	10-5-89	
	E	REV PER ECO 19028 DEB 2/14/90	2-15-90	
	/	REV PER ECO 21678	5-28-91	

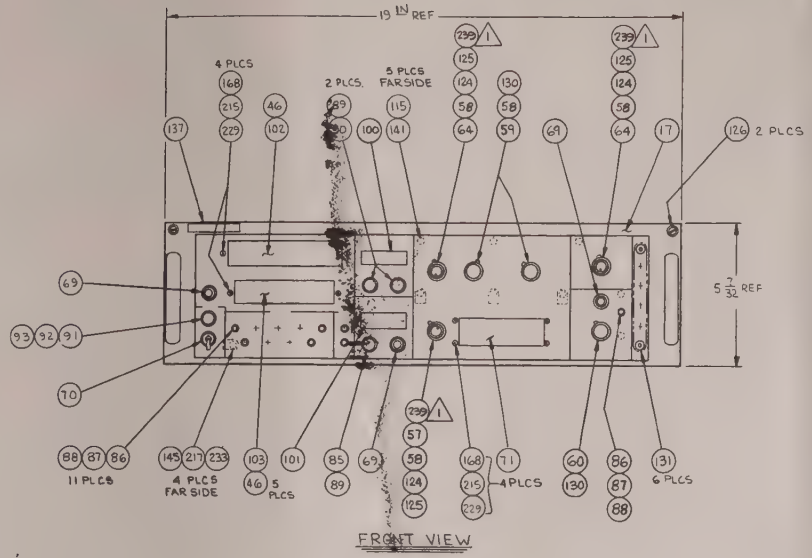

FRONT VIEW

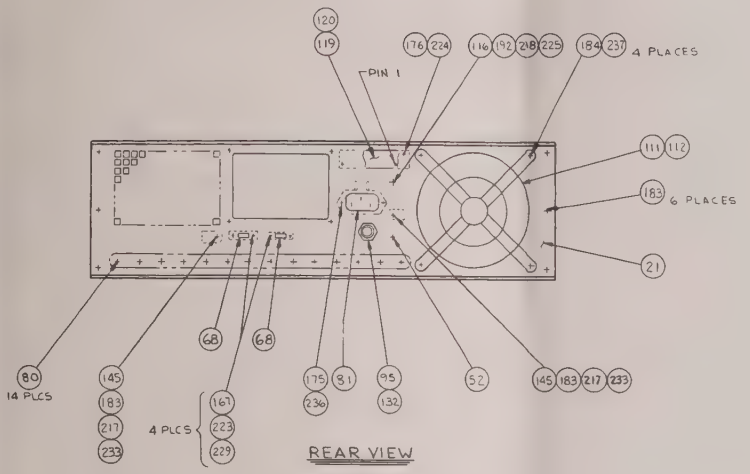

REAR VIEW

NOTE:
1. DISCARD NUT SUPPLIED WITH ITEM 57 & 64 AND USE ITEM 239.

REVISION	F	B
DASH NO.	501	502

FOR PARTS LIST SEE PL 355-0181-

NEXT ASSY	USED ON
356-0181-506	1161-72
356-0181-500	1368-83

APPLICATION

DRAWN J. HOEFLER DATE 11-9-86
CHECKED 11/18/86
DRAFTING 11-14-86
ENGINEER 11/18/86
MFG WM REINHART 11/20/86
APPROVED KSW
APPROVED M.E. 11/18/86

AYDIN MONITOR SYSTEMS
FORT WASHINGTON, PENNA. 19034

PCM BIT SYNCHRONIZER
CHASSIS ASSEMBLY
MODEL 335A

SIZE D | CODE IDENT NO. 20747 | AD 355-0181- | REV /
SCALE 1/2 | SHEET 1 OF 2

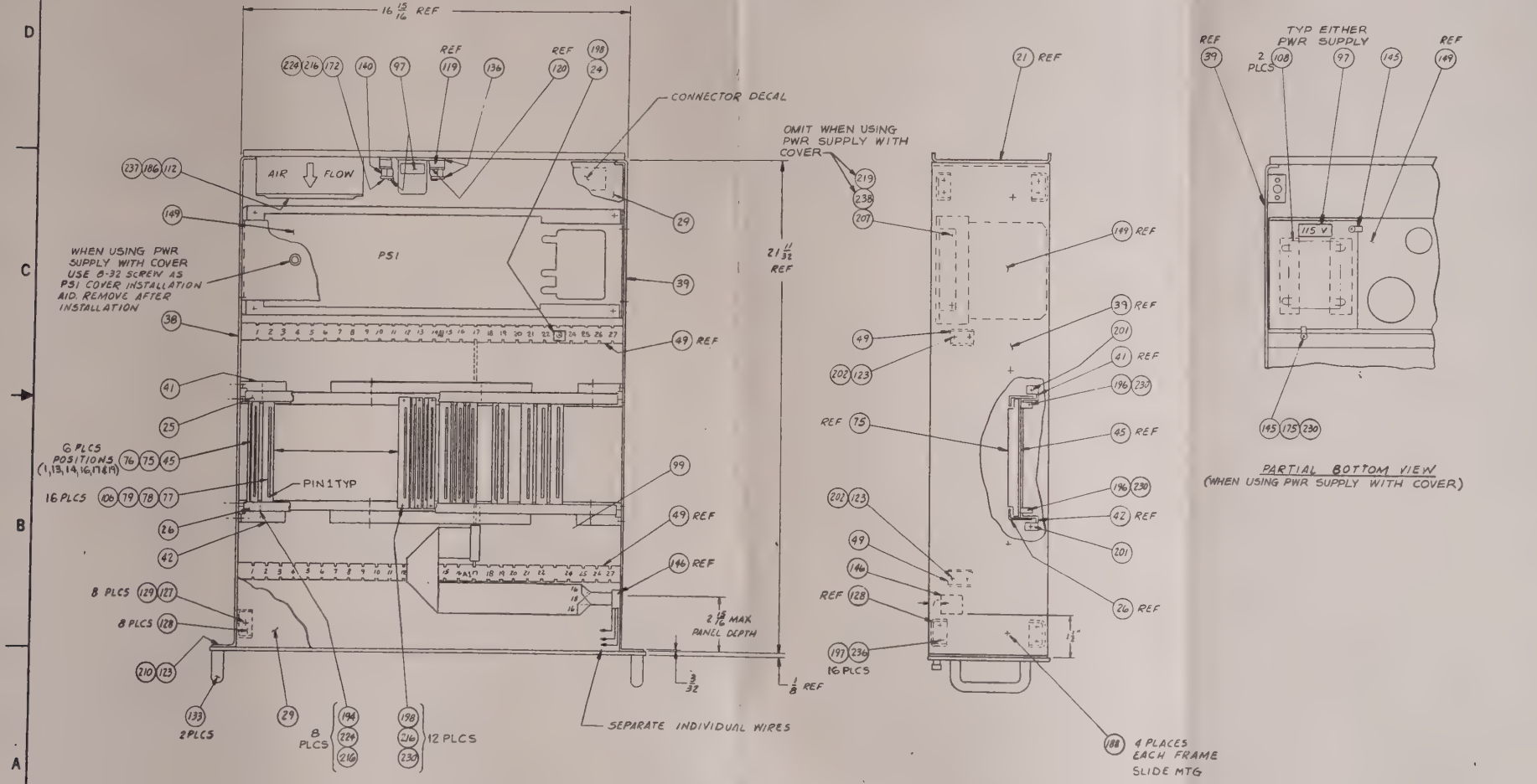

PCM SYNC		MODEL 335A	
SIZE D	CODE IDENT NO. 20747	CAD 355-0181-☐	REV
SCALE 1/2		SHEET 2 OF 2	

REVISIONS				
REV	DESCRIPTION	EFFECTIVE ON S/N	DATE	APPROVED
B	REVISED PER ECO 14105 SLH		3/17/87	[illegible]
C	REVISED PER ECO 15406 JH 9-18-87		9/23/87	[illegible]
D	REVISED PER ECO 15980 DTG 2-10-88		2/10/88	[illegible]
E	REVISED PER ECO 17061		12/2/88	[illegible]
F	REVISED PER ECO 19028 [illegible]		2-15-90	[illegible]
G	REVISED PER ECO 21678		5-28-91	W Hirschel
H	REVISED PER ECO 21819 [illegible]		7-11-91	W. Hirschel
J	REVISED PER ECO 21978		8-19-91	[illegible]
K	REVISED PER ECO 22860		7 FEB 92	T. BORAWSKI

SHEET	1	2	3	4	5	6	7	8	9	10	11	12	13	14	15	16	17	18	19	20	21	22	23
REVISION																							

AYDIN MONITOR SYSTEMS
FORT WASHINGTON, PENNA. 19034

TITLE PCM SYNCHRONIZER
CHASSIS ASSY
MODEL 335 A

CODE IDENT 20747
CONTRACT NO. 1368-83

DRAWN	HOEFLER	10/10/86	ENGINEER	J. Bayton	[illegible]	DWG NO.	REV
CHECKED	[illegible]	[illegible]	APPROVED	[illegible]	[illegible]	PL355-0181-501	K
DRAFTING	[illegible]	[illegible]	[illegible]	[illegible]	[illegible]	SHEET 1 OF 8	

800-0066

800-0129 MONITOR SYSTEMS INC

POSITION NO.		1	2	3	4	5	6	7	8	9	10	11	12	13	14	15	16
INDICATES PC CONN AND KEY INSTALLED	FILE A1																
	KEY	X	10/16	8/22	12/22	14/26	8/22	10/36	12/18	8/16	12/32	12/30	12/34	X	X	12/34	X
	FILE A2																
	KEY																
	FILE A3																
	KEY																

POSITION NO.		17	18	19	20	21	22	23	24	25	26	27	28	29	30	31	32
INDICATES SPECIAL CONN INSTALLED	FILE A1		OPEN		OPEN												
	KEY	X	X	X	X	10/24	10/24	8/16	8/16								
	FILE A2																
	KEY																
	FILE A3																
	KEY																

ALL CARDS ARE KEYED 8/12 UNLESS OTHERWISE NOTED.

DRAWN	CHECKED	TITLE	CODE IDENT NO.	DWG. NO.	REV
J. HOEFLER		PCM BIT SYNCHRONIZER CHASSIS ASSY MODEL 335A	20747	PL 355-0181-501	K
DATE 9/16/87	DATE			SHEET 2 OF 8	

PARTS LIST	DESIGN ACTIVITY IDENTIFICATION AYDIN COMPUTER AND MONITOR DIVISION HORSHAM, PA. 19044	CONTRACT NO.	CAGE CODE 20747	PL355-0181-501	REV K

LIST TITLE	SUBCONTRACT NO.		SHEET NO.
CHASSIS ASSY MOD 335A			2

FIND NO	QTY REQ	U/M	CAGE CODE	DOCUMENT NUMBER	PART OR IDENTIFYING NUMBER	NOMENCLATURE OR DESCRIPTION	NOTES
000	15	FT	81349	113-006-002	M16878/1BFE0	WIRE INSUL STR 22 BLK	
000	15	FT	81349	113-006-004	M16878/1BFE5	WIRE INSUL STR 22 GRN	
000	100	FT	81349	113-008-001	M16878/1BDE9	WIRE INSUL STR 26 WHT	
000	90	FT	AMS18	113-217-002	10102-1-6	WIRE TW PR 26 BLK/GRN	
000	35	FT	81349	113-301-004	M17/119-RG174	CABLE COAX RG-174/U	
000	35	FT	81349	113-004-002	M16878/1BHE0	WIRE INSUL STR 18 BLK	
000	10	FT	81349	113-004-003	M16878/1BHE2	WIRE INSUL STR 18 RED	
000	20	FT	81349	113-004-005	M16878/1BHE4	WIRE INSUL STR 18 YEL	
000	10	FT	81349	113-004-010	M16878/1BHE7	WIRE INSUL STR 18 VIO	
000	20	FT	81349	113-008-002	M16878/1BDE0	WIRE INSUL STR 26 BLK	
000	4	FT	92194	113-219-222	3221	CABLE SHLD 2 COND 22	
000	2	FT	08261	113-261-050	843-135-2801-050	CA LAM RIB 50 COND 28	
000	15	FT	81349	113-006-003	M16878/1BFE2	WIRE INSUL STR 22 RED	
000	15	FT	81349	113-006-010	M16878/1BFE7	WIRE INSUL STR 22 VIO	
000	3	FT	20747	113-205-006	REFER TO SPEC	CAB UNSHLD 6 COND 26	
000	15	FT	81349	113-004-001	M16878/1BHE9	WIRE INSUL STR 18 WHT	
000	20	FT	81349	113-008-005	M16878/1BDE4	WIRE INSUL STR 26 YEL	
000	6	FT	20747	113-205-012	REFER TO SPEC	CAB UNSHLD 12 COND 26	
000	8	FT	20747	113-205-025	REFER TO SPEC	CAB UNSHLD 25 COND 26	
000	10	FT	81349	113-004-004	M16878/1BHE5	WIRE INSUL STR 18 GRN	
000	12	FT	92194	113-219-218	3241	CABLE SHLD 2 COND 18	
000	6	FT	92194	113-219-318	3242	CABLE SHLD 3 COND 18	
017	1	EA	20747	201-0741-001	201-0741-001	PANEL FRONT MOD 335A	
021	1	EA	20747	203-0600-001	203-0600-001	PANEL REAR	

PARTS LIST	DESIGN ACTIVITY IDENTIFICATION: AYDIN COMPUTER AND MONITOR DIVISION, HORSHAM, PA. 19044	CONTRACT NO.	CAGE CODE: 20747	PL355-0181-501	REV: K

LIST TITLE	SUBCONTRACT NO.		SHEET NO.
CHASSIS ASSY MOD 335A			4

FIND NO	QTY REQ	U/M	CAGE CODE	DOCUMENT NUMBER	PART OR IDENTIFYING NUMBER	NOMENCLATURE OR DESCRIPTION	NOTES
024	1	EA	20747	205-0719-001	205-0719-001	BRACKET CABLE MOUNT	
025	1	EA	20747	205-0772-001	205-0772-001	BRACKET CONN RETAINER	
026	1	EA	20747	205-0772-002	205-0772-002	BRACKET CONN RETAINER	
029	2	EA	20747	206-0258-001	206-0258-001	COVER	
038	1	EA	20747	210-0293-002	210-0293-002	SIDE FRAME LH	
039	1	EA	20747	210-0293-001	210-0293-001	SIDE FRAME RH	
041	1	EA	20747	211-0323-001	211-0323-001	ANGLE Z PC CONN MTG	
042	1	EA	20747	211-0323-002	211-0323-002	ANGLE Z PC CONN MTG	
045	6	EA	20747	212-0191-001	212-0191-001	SPACE ADAPTER	
046	10	EA	20747	217-0345-001	217-0345-001	MOD CONN	
049	2	EA	20747	225-0240-001	225-0240-001	BAR CARD GUIDE	
052	1	EA	20747	351-0273-501	351-0273-501	INSUL GRND	E7
057	1	EA	81073	107-055-103	71C302104NF-2104NF	RTY CONC SHFT 30 1P	S13
058	5	EA	81073	107-042-008	12C1087	SW RTY NON-TURN WASH	
059	2	EA	81073	107-042-006	71B30-04-1-12NC	RTY 30 DEG 4DK 12POS	S4 S5
060	1	EA	31336	107-025-001	1030F-101-2NY	SW RTY 30 DEG 2 POS	S3
064	2	EA	81073	107-055-101	71C301102N-1102N	RTY CONCNT SHFT 30	S1 S6
068	2	EA	09353	107-107-003	1201M1ZQE	SW SLIDE SUBMIN DPDT	S31 S32
069	3	EA	55588	107-112-001	161K31213	SWITCH PUSHBUTTON DPST	S2 S14 S15
070	1	EA	95146	107-232-003	MTG-106D	SW TGL SPDT	S16
071	1	EA	07126	107-328-001	8-M-352	THUMBWH SW ASSY 4 POS	S7-S12
075	6	EA	00779	108-213-140	1-583718-5	CONN 80 POS WITH EARS	
076	480	EA	00779	108-213-004	583616-4	CONN CONT 28-24 AWG	
077	610	EA	91662	108-107-046	000-60-8017-03-13	CONN CONTACT (LOOSE)	

PARTS LIST	DESIGN ACTIVITY IDENTIFICATION AYDIN COMPUTER AND MONITOR DIVISION HORSHAM, PA. 19044	CONTRACT NO.	CAGE CODE 20747	PL355-0181-501	REV K

LIST TITLE	SUBCONTRACT NO.	SHEET NO.
CHASSIS ASSY MOD 335A		5

FIND NO	QTY REQ	U/M	CAGE CODE	DOCUMENT NUMBER	PART OR IDENTIFYING NUMBER	NOMENCLATURE OR DESCRIPTION	NOTES
078	16	EA	91662	108-207-005	7015-041-000-002	CONN RECEP 41 POS	
079	32	EA	91662	108-207-009	60-5006-3414	CONN POLARIZ INSERT	
080	14	EA	14949	108-302-001	BJ-27	COAX BNC SOLDER PIN	J1 J2 J3 J4 J5 J6 J7 J8 J9 J10 J11 J12 J13 J14
081	1	EA	13050	108-817-001	5004-6622	CONN PWR LINE FILTER	J16
085	1	EA	72619	110-008-006	507-39111432600	LAMP INCAND GRN	DS23
086	12	EA	72619	110-008-011	515-0012	LAMP CONN CARTRIDGE	
087	12	EA	72619	110-008-013	515-0051	LAMP SPEED CLIP	
088	12	EA	72619	110-019-004	507-49573733500	LAMP CART YEL	XDS3 XDS17 XDS18 XDS19 XDS20 XDS21 XDS22 XDS24 XDS25 XDS26 XDS27 XDS28
089	3	EA	72619	110-019-009	250-873814504	LMPHOLDER W/O COLLAR	XDS10 XDS11 XDS23
090	2	EA	72619	110-019-001	507-47573731500	LAMP CART RED	XDS10 XDS11
091	1	EA	96906	110-015-001	MS25252-C7A	LAMP NEON 1.2 MA	DS29
092	1	EA	81349	110-034-001	LH74/1	LAMPHOLDER	XDS29
093	1	EA	81349	110-034-006	LC13YN2	LAMPHOLDER LENS AMBER	XDS29
095	1	EA	75915	111-005-025	31302.5	FUSE 2-1/2 A SLO-BLO	F1
097	3	EA	20747	111-200-001	111-200-001	LABEL WARNING 115V	
099	1	EA	15912	108-273-150	622-5015	CONN CARD EDGE 50 POS	
100	1	EA	29834	112-012-001		METER THIN LINE-HORIZ	M1
101	1	EA	94075	112-015-001	112-015-001	METER THIN LINE-HORIZ	M2
102	1	EA	72619	112-021-001	749-1506-803	DISPLAY LED 6 CHAR	XDS4-9
103	1	EA	72619	112-021-013	749-1505-804	DISPLAY LED 5 CHAR	XDS12-16

PARTS LIST	DESIGN ACTIVITY IDENTIFICATION: AYDIN COMPUTER AND MONITOR DIVISION, HORSHAM, PA. 19044	CONTRACT NO.	CAGE CODE: 20747	PL355-0181-501	REV K
LIST TITLE: CHASSIS ASSY MOD 335A		SUBCONTRACT NO.			SHEET NO. 6

FIND NO	QTY REQ	U/M	CAGE CODE	DOCUMENT NUMBER	PART OR IDENTIFYING NUMBER	NOMENCLATURE OR DESCRIPTION	NOTES
106	140	EA	11769	113-406-002	60 8017 0723	BUS STRIP VARILOK	
108	AR	EA	99742	114-031-001	P-224	TAPE FILM PRESS SENS	
111	1	EA	60339	116-084-101	A30122-10	FAN AXIAL 4.7"SQ BB	
112	2	EA	AMS04	116-084-901	08130	FAN FNGR GUARD 4.5IN	
113	2	EA	00779	118-202-001	323914	TERM CRIMP 26-22 #4	
114	30	EA	00779	118-202-205	36152	TERM CRIMP 22-18 #6	
115	5	EA	71279	118-015-004	1511-1-0519	TURRET(REPL W 118-059-1001)	
116	1	EA	00779	118-202-212	326873	TERM CRIMP 22-16 #10	
117	1	EA	00779	118-202-310	321045	TERM CRIMP 16-14 1/4	
118	30	EA	59730	118-213-001	RSK101	TERMINAL CONN INSUL	
119	1	EA	75382	119-004-008	410-8	TERMINAL BLOCK 8 POS	TB1
120	3	EA	75382	119-004-023	410-J	TERMINAL BLOCK JUMPER	
121	33	EA	00779	118-202-216	330648	TERM CRIMP 22-16 #4	
122	84	EA	14726	118-048-003	S05300F	TERM SLIP-ON INSUL	
123	AR	EA	05972	120-004-059	22231	SEALANT RPLCE W 120-004-001	
124	3	EA		121-113-001	70CPL-2	KNOB RD POINTED 1/4 S	
125	3	EA		121-112-001	SS50L1 REDSHORT	KNOB RD. 1/8 SFT CONC	
126	2	EA	08524	121-004-002	F7500-10-C-3	CAPTIVE SCREW 10-32	
127	8	EA	94222	121-005-001	82-11-140-16	FASTENER 1/4 TURN	
128	8	EA	94222	121-005-009	82-45-101-15	RECEPTACLE 1/4 TURN	
129	8	EA	94222	121-005-010	82-32-101-20	RETAINING WASHER	
130	3	EA	21604	121-115-001	SS-70PL-2	KNOB RD POINTED 1/4 S	
131	6	EA	74970	121-200-001	105-0253-001	TEST POINT STD BLK	

PARTS LIST	DESIGN ACTIVITY IDENTIFICATION AYDIN COMPUTER AND MONITOR DIVISION HORSHAM, PA. 19044	CONTRACT NO.	CAGE CODE 20747	PL355-0181-501	REV K

LIST TITLE	SUBCONTRACT NO.	SHEET NO.
CHASSIS ASSY MOD 335A		7

FIND NO	QTY REQ	U/M	CAGE CODE	DOCUMENT NUMBER	PART OR IDENTIFYING NUMBER	NOMENCLATURE OR DESCRIPTION	NOTES
132	1	EA	71400	121-303-001	HKP	FUSE HOLDER NON IND	XF1
133	2	EA	06540	121-503-001	10923-B-1032-4	HANDLE OVAL 3" CTR	
136	2	EA	75382	124-002-008	MS410-8-XP 1A	MARKER STRIP 8 POS	
137	1	EA	20747	124-011-002	124-011-002	LOGO PLATE MONITOR	
140	2	EA	06540	128-003-010	8104-SS-0440	STDF HX .19 4-40X3/8	
141	5	EA	06540	128-008-011	9224A140	SPACER RD .25D 6 1/4	
144	100	EA	06383	130-203-001	SST1.5M	CABLE TIE 1-1/4 DIA	
145	8	EA	06383	130-204-001	TA1S8	MOUNT CABLE TIE	
146	1	EA	06383	130-216-001	FCM1-A-14	MOUNT FLAT CABL ADHES	
149	1	EA	54407	136-079-003	CP627-1	PWR SPLY 5V-12A/15V-3	
167	4	EA	96906	127-109-004	MS51957-04	SCR PAN HD 2-56X5\16	
168	8	EA	96906	127-109-006	MS51957-06	SCR PAN HD 2-56X7\16	
172	2	EA	96906	127-109-012	MS51957-12	SCR PAN HD 4-40X3\16	
175	3	EA	96906	127-109-015	MS51957-15	SCR PAN HD 4-40X3/8	
176	2	EA	96906	127-109-017	MS51957-17	SCR PAN HD 4-40X1\2	
183	8	EA	96906	127-109-028	MS51957-28	SCR PAN HD 6-32X3\8	
184	4	EA	96906	127-109-032	MS51957-32	SCR PAN HD 6-32X3\4	
186	4	EA	96906	127-109-031	MS51957-31	SCR PAN HD 6-32X5\8	
188	8	EA	96906	127-109-043	MS51957-43	SCR PAN HD 8-32X3\8	
192	1	EA	96906	127-101-059	MS51958-59	SCR PAN HD 10-32X 1\4	
194	8	EA	96906	127-109-013	MS51957-13	SCR PAN HD 4-40X1\4	
196	4	EA	96906	127-105-003	MS24693-C03	SCR 100 FH 4-40X5/16	
197	16	EA	96906	127-105-004	MS24693-C04	SCR 100 FH 4-40 X 3/8	
198	13	EA	96906	127-105-005	MS24693-C05	SCR 100 FH 4-40 X 7/16	

PARTS LIST	DESIGN ACTIVITY IDENTIFICATION AYDIN COMPUTER AND MONITOR DIVISION HORSHAM, PA. 19044	CONTRACT NO.	CAGE CODE 20747	PL355-0181-501	REV K

LIST TITLE CHASSIS ASSY MOD 335A	SUBCONTRACT NO.		SHEET NO. 8

FIND NO	QTY REQ	U/M	CAGE CODE	DOCUMENT NUMBER	PART OR IDENTIFYING NUMBER	NOMENCLATURE OR DESCRIPTION	NOTES
201	4	EA	96906	127-105-025	MS24693-C25	SCR 100 FH 6-32X 5\16	
202	8	EA	96906	127-105-026	MS24693-C26	SCR 100 FH 6-32 X 3/8	
207	4	EA	96906	127-105-051	MS24693-C51	SCR 100 FH 8-32 X 5/8	
210	4	EA	96906	127-105-272	MS24693-C272	SCR 100 FH 10-32X1\2	
215	8	EA	96906	128-200-802	MS15795-802	WASHER FLAT RD NO 2	
216	24	EA	96906	128-200-803	MS15795-803	WASHER FLAT RD NO.4	
217	6	EA	96906	128-200-805	MS15795-805	WASHER FLAT RD NO.6	
218	1	EA	96906	128-200-808	MS15795-808	WASHER FLAT RD NO.10	
219	4	EA	96906	128-200-807	MS15795-807	WASHER FLAT RD NO.8	
223	4	EA	96906	128-202-134	MS35338-134	WASHER LK SPLIT NO.2	
224	12	EA	96906	128-202-135	MS35338-135	WASHER LK SPLIT NO.4	
225	1	EA	96906	128-202-138	MS35338-138	WASHER LK SPLIT NO.10	
229	12	EA	72962	129-001-002	92-1660-26	NUT HEX LK MINTR 2-56	
230	13	EA	72962	129-001-003	92-1660-40	NUT HEX LK MINTR 4-40	
233	6	EA	72962	129-004-001	22NM107-62	NUT SLFLK RED HD 6-32	
236	18	EA	96906	129-005-014	MS-20365-440A	NUT SELF LOCK 4-40	
237	8	EA	96906	129-005-015	MS-20365-632A	NUT SELF-LOCKING 6-32	
238	4	EA	96906	129-005-016	MS-20365-832A	NUT SELF LOCK 8-32	
239	3	EA	83330	129-017-001	1199	NUT HEX THIN 3/8-32	
				AD 355-0181-501		ASSEMBLY DRAWING - CHASSIS ASSY MOD 335A	
				WL 730-2461		WIRE LIST - MODEL 335A CHASSIS	
				WL 760-0342		WIRE LIST - MODEL 335A LIBRARY	

REVISIONS				
REV	DESCRIPTION	EFFECTIVE ON S/N	DATE	APPROVED
B	REVISED PER ECO 07604 A.IC 5-5-82		5/7/82	J. McDaniel
B	CONVERTED TO COMPUTER PL CE		4-24-86	ES

SHEET	1	2	3	4	5	6	7	8	9	10	11	12	13	14	15	16	17	18	19	20	21	22	23
REVISION	—	—																					

XX AYDIN MONITOR SYSTEMS
FORT WASHINGTON, PENNA. 19034

TITLE
LIST OF ACCESSORIES
MODEL 335

CODE IDENT 20747
CONTRACT NO. 2041

DRAWN	J. SHIELDS	12-17-81	ENGINEER	J. McDaniel	12/17/81	DWG NO. PL 354-0181-501	REV B1
CHECKED	ES		APPROVED				
DRAFTING		12-31-81	MFG.			SHEET 1 OF 1	

800-0066

*** SINGLE LEVEL BILL - BY ITEM ***

ASSEMBLY: 354-0181-501 REV: B

QPA	ITEM	MONITOR #	MFG PART NBR	DESCRIPTION	REF.DES
		354-0181-501		PARENT 335 ACC	
1	004	113-208-002	17250	PWR CORD 7.5 FT 18	
1	010	108-113-010	57-10240-4	CONN PLUG 24 CONTACT	P17
1	012	122-004-001	B-7891 STYLE E	CARD PULLER	
1	014	460-0264-2	460-0264-2	CARD ASSY EXT023-2	
1	015	460-1828-501	460-1828-501	EXT016-1	
4	018	129-003-001	A-310-08-0002-0	NUT BAR 10-32	
4	019	127-101-063	MS51958-63	SCR PAN HD 10-32X1\2	
4	020	127-105-272	MS24693-272	SCR 100 FH 10-32X1\2	
4	021	128-200-808	MS15795-808	WASHER FLAT RD NO.10	
4	022	128-202-138	MS35338-138	WASHER LK SPLIT NO.10	

REVISIONS				
REV	DESCRIPTION	EFFECTIVE ON S/N	DATE	APPROVED

SHEET	1	2	3	4	5	6	7	8	9	10	11	12	13	14	15	16	17	18	19	20	21	22	23
REVISION																							

AYDIN MONITOR SYSTEMS
FORT WASHINGTON, PENNA. 19034

TITLE PCM BIT SYNRONIZER
MODEL 335 ACC

CODE IDENT 20747
CONTRACT NO. 1368-81

DRAWN	J. HOEFLER	10/31/86	ENGINEER	John Boynton	11/18/86	DWG NO. PL 354-0181-502	REV A
CHECKED	[signature]	[illegible]	APPROVED	[signature]	11/18/86		
DRAFTING	[signature]	11-25-86	M.E.	[signature]	[illegible]	SHEET 0 OF 1	

800-0066

ASSEMBLY: 354-0181-502 REV: A

QPA	ITEM	MONITOR #	MFG PART NBR	REV	DESCRIPTION	REF.DES
		354-0181-502		A	PARENT 335 ACC	
1	004	113-208-002	17250	R	PWR CORD 7.5 FT 18	
2	010	108-101-011	1-202663-9	Z	CONN 34 POS FEMALE	P17 P18
68	011	108-101-115	66109-1	Z	CONN SOCK CONT 26-24	
1	012	122-004-001	B-7891 STYLE E	B	CARD PULLER	
1	014	460-0264-2	460-0264-2	K	CARD ASSY EXT023-2	
1	015	460-1828-501	460-1828-501	A	EXT016-1	
4	018	129-003-001	A-310-08-0002-0	B	NUT BAR 10-32	
4	019	127-101-063	MS51958-63	A	SCR PAN HD 10-32X1\2	
4	020	127-105-272	MS24693-272	A	SCR 100 FH 10-32X1\2	
4	021	128-200-808	MS15795-808	A	WASHER FLAT RD NO.10	
4	022	128-202-138	MS35338-138	A	WASHER LK SPLIT NO.10	

NOTICE TO PERSONS RECEIVING THIS DOCUMENT: THIS DOCUMENT IS THE EXCLUSIVE PROPERTY OF AYDIN CORPORATION. CONTAINS PROPRIETARY AND PRIVATE INFORMATION OF THE COMPANY AND IS DELIVERED ON THE EXPRESS CONDITION THAT IT IS NOT TO BE DISCLOSED OR REPRODUCED (IN WHOLE OR IN PART) NOR USED FOR MANUFACTURE BY ANYONE OTHER THAN THE AYDIN CORPORATION AND FURTHER NO RIGHT IS GRANTED TO DISCLOSE OR SO USE ANY INFORMATION CONTAINED IN THIS DOCUMENT.

ZONE	LTR	REVISIONS DESCRIPTION	DATE	APPROVED
	R	REV & RE DRN PER ECO #19803 /S	7-6-72	
	T	REV PER ECO 22640 DRB 11-11-91		11-15-91

MARK DASH NO. AS REQ'D

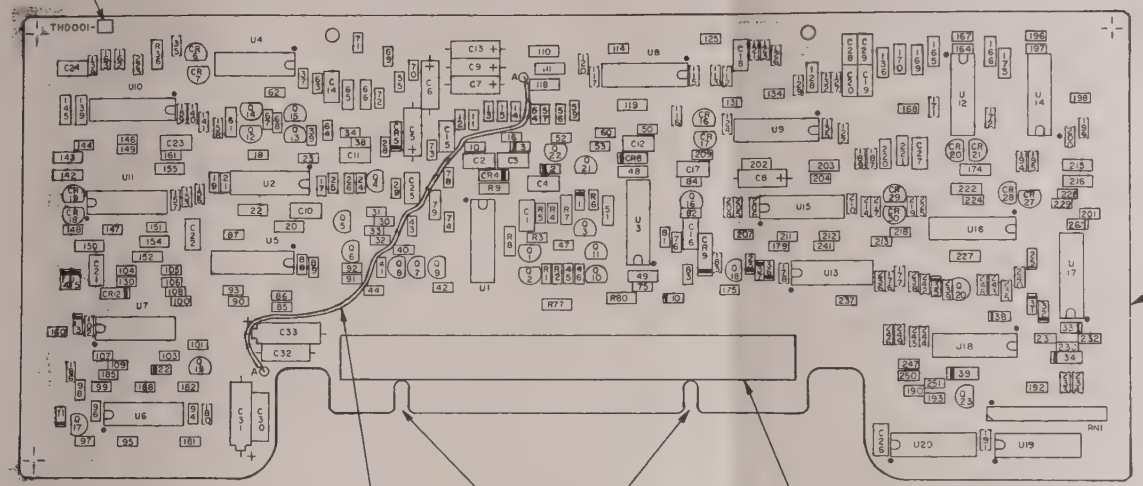

NOTES:

1. FOR GENERAL MANUFACTURING & ENGINEERING NOTES SEE DRAWING NO. 401-0010.
2. INSTALL JUMPER FROM "A" TO "A" AS SHOWN FOR -503 ASSY. ONLY.

FOR PARTS LIST SEE PL 460-0906-☐

DRAWN J. HARTZELL 1-6-72	AYDIN MONITOR SYSTEMS, FORT WASHINGTON, PENNA. 19034	
CHECKED R. OLIVIERI 4-26-72	CARD ASSEMBLY THRESHOLD DETECTORS THD001-☐	
DRAFTING J. SAMPEDRO 10-12-72		
ENGINEER R. WASSERMAN 8-1-72		
MFG R. HELLER 10-16-72		
APPROVED R. CLEGG 10-25-72	SIZE D / CODE IDENT NO. 20747 / 460-0906-☐ / REV T	
NEXT ASSY 9412 / USED ON APPLICATION	APPROVED	SCALE 2/1 / SHEET 1 OF 5

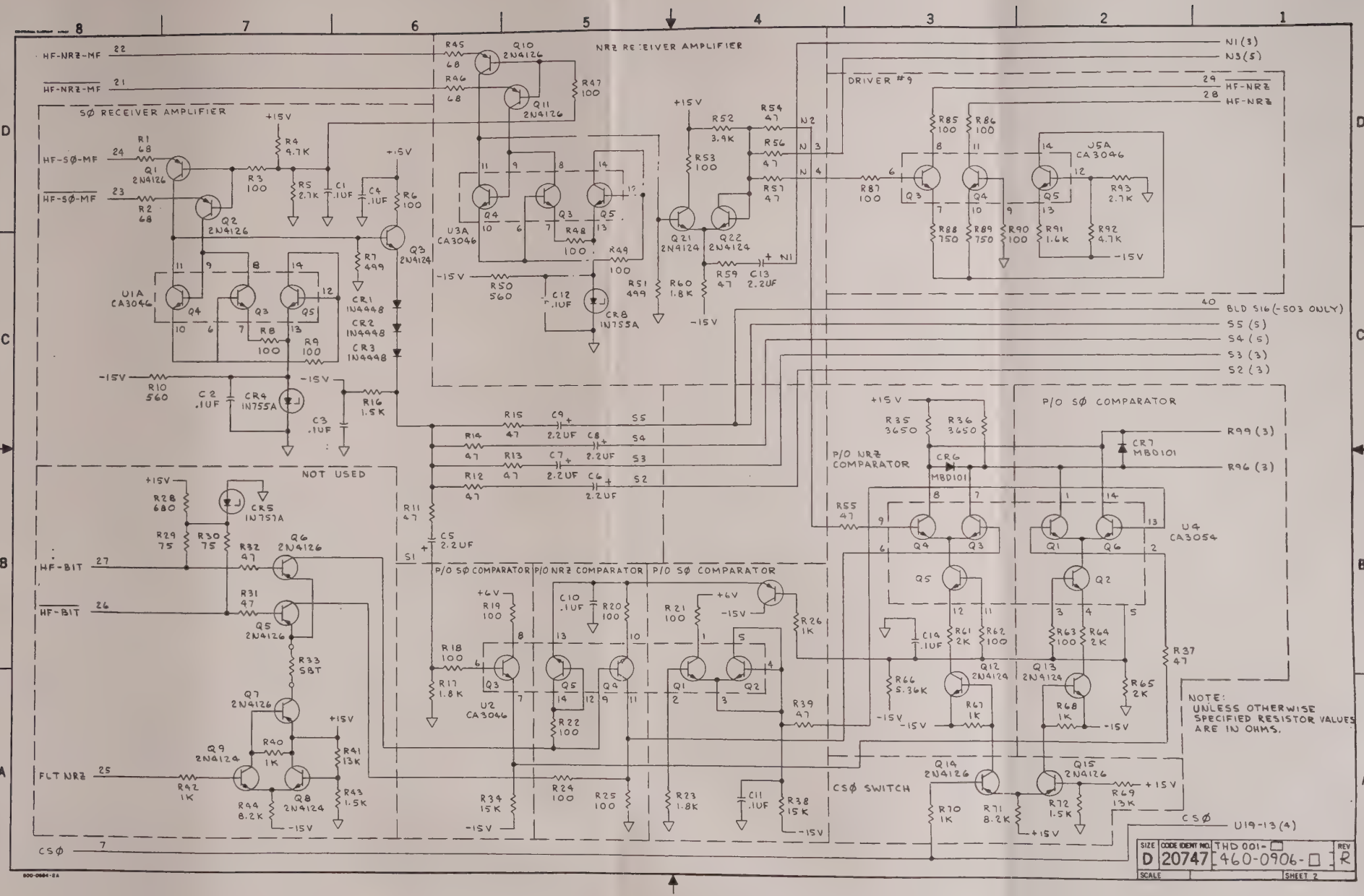
NRZ RECEIVER AMPLIFIER
SØ RECEIVER AMPLIFIER
DRIVER #9
NOT USED
P/O SØ COMPARATOR
P/O NRZ COMPARATOR
CSØ SWITCH
HF-NRZ-MF
HF-SØ-MF
HF-BIT
FLT NRZ
CSØ
N1(3)
N3(5)
HF-NRZ
BLD S16(-503 ONLY)
S5(5)
S4(5)
S3(3)
S2(3)
R99(3)
R96(3)
U1A CA3046
U3A CA3046
U2 CA3046
U5A CA3046
U4 CA3054
NOTE:
UNLESS OTHERWISE SPECIFIED RESISTOR VALUES ARE IN OHMS.
SIZE D
CODE IDENT NO. 20747
THD 001-□
460-0906-□
REV R
SCALE
SHEET 2

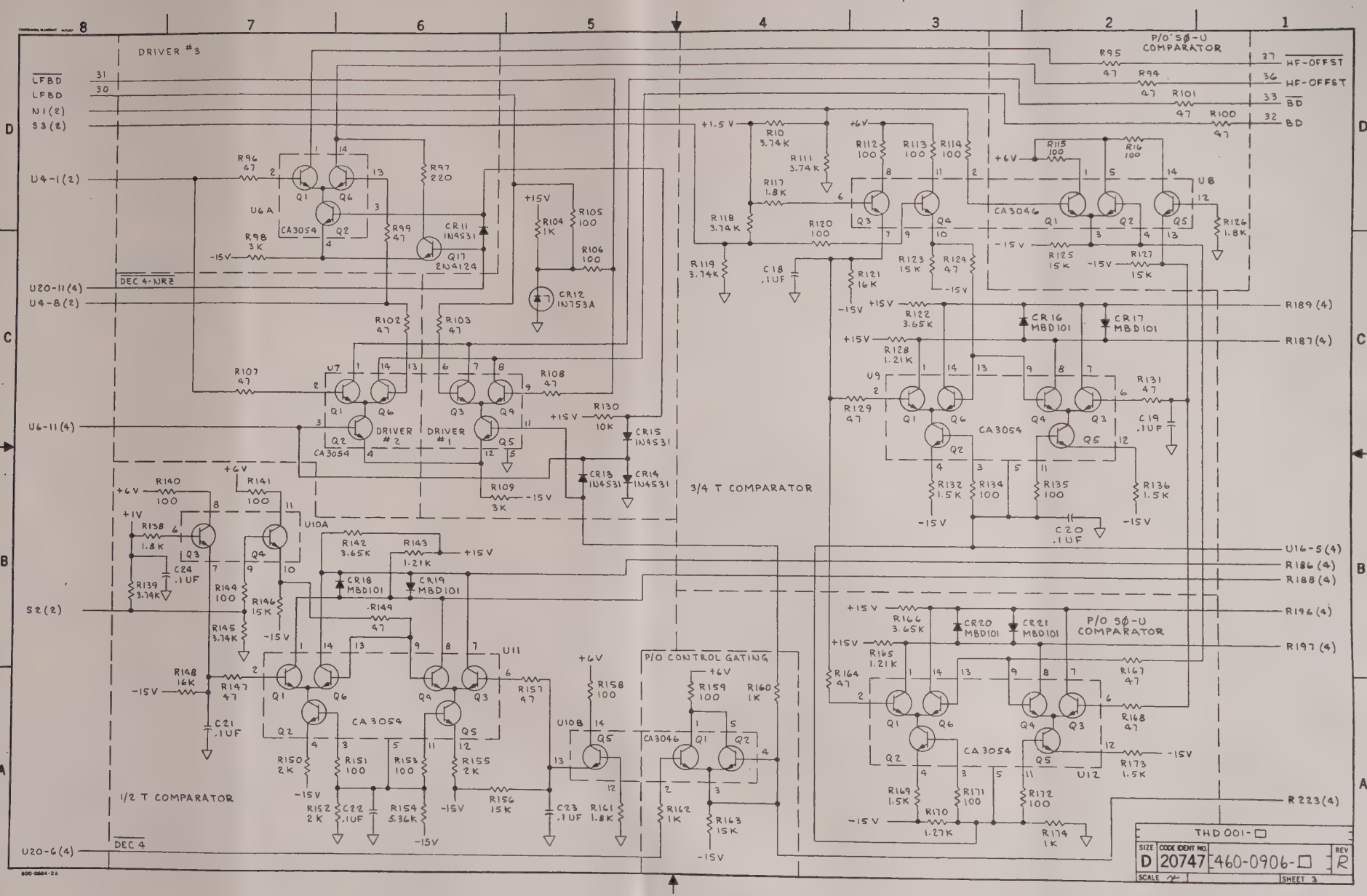
DRIVER #3
P/O SØ-U COMPARATOR
DRIVER #2
DRIVER #1
3/4 T COMPARATOR
1/2 T COMPARATOR
P/O CONTROL GATING
P/O SØ-U COMPARATOR
CA3054
CA3046
LFBD
LFBD
N1(2)
S3(2)
U4-1(2)
U20-11(4)
U4-8(2)
U6-11(4)
S2(2)
U20-6(4)
DEC 4-NRZ
DEC 4
HF-OFFST
HF-OFFST
BD
BD
U16-5(4)
R189(4)
R187(4)
R186(4)
R188(4)
R196(4)
R197(4)
R223(4)
THD 001-□
SIZE D
CODE IDENT NO. 20747
460-0906-□
REV R
SCALE
SHEET 3

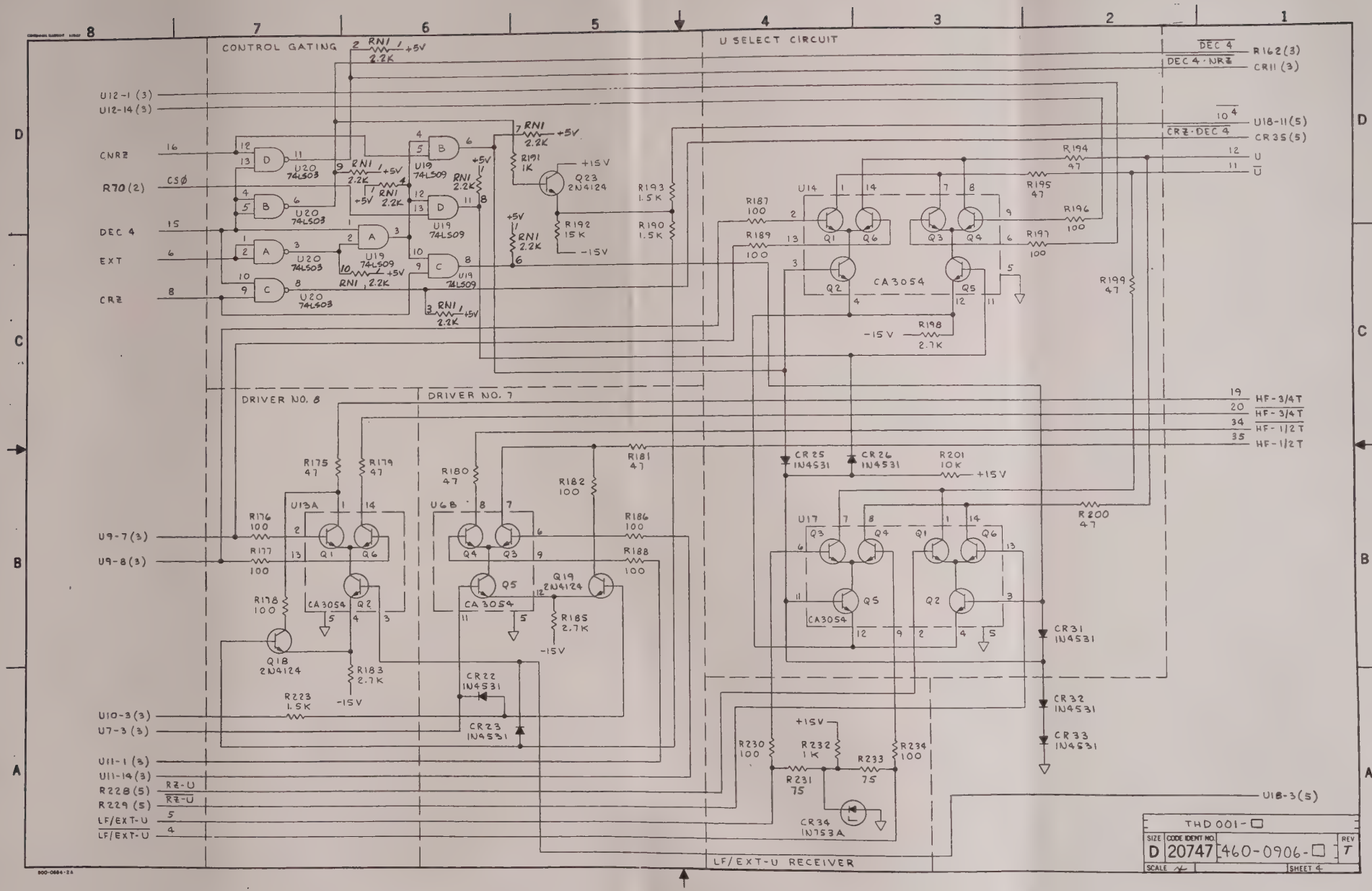
CONTROL GATING
U SELECT CIRCUIT
DRIVER NO. 8
DRIVER NO. 7
LF/EXT-U RECEIVER
U12-1 (3)
U12-14 (3)
CNRZ
R70 (2)
CSØ
DEC 4
EXT
CRZ
U9-7 (3)
U9-8 (3)
U10-3 (3)
U7-3 (3)
U11-1 (3)
U11-14 (3)
R228 (5)
R229 (5)
LF/EXT-U
R162 (3)
CR11 (3)
U18-11 (5)
CR35 (5)
U
HF-3/4T
HF-1/2T
U18-3 (5)
CA3054
THD 001-□
SIZE D
CODE IDENT NO. 20747
460-0906-□
REV T
SHEET 4

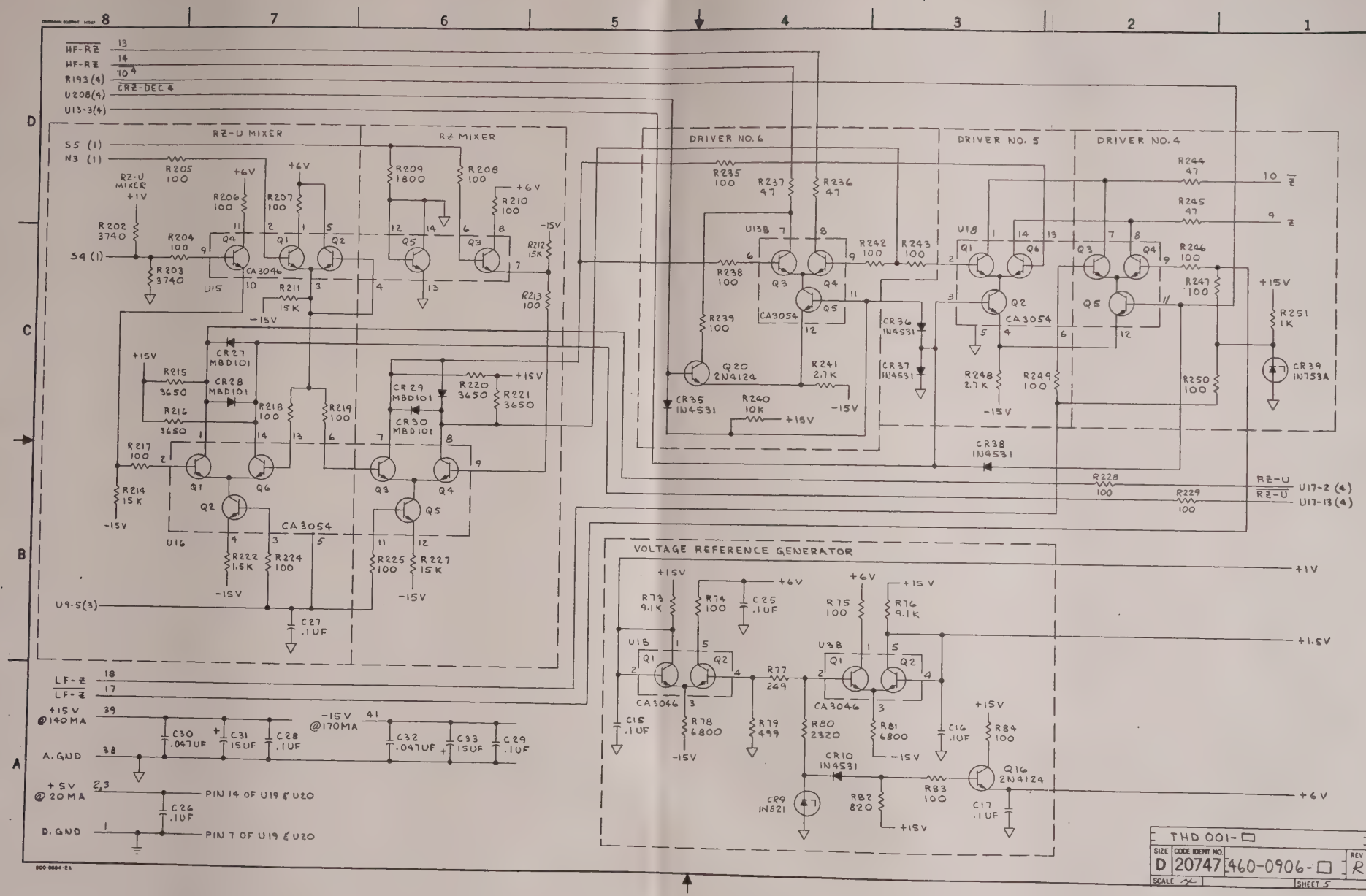

HF-RZ
HF-RZ
R193(4)
U208(4)
U13-3(4)
CRZ-DEC 4
RZ-U MIXER
RZ MIXER
DRIVER NO. 6
DRIVER NO. 5
DRIVER NO. 4
S5 (1)
N3 (1)
S4 (1)
RZ-U MIXER +1V
U15
U16
CA3046
CA3054
U13B
U18
U9-5(3)
CR27 MBD101
CR28 MBD101
CR29 MBD101
CR30 MBD101
CR35 1N4531
CR36 1N4531
CR37 1N4531
CR38 1N4531
CR39 1N753A
Q20 2N4124
Q16 2N4124
CR10 1N4531
CR9 1N821
RZ-U
RZ-U
U17-2 (4)
U17-13 (4)
VOLTAGE REFERENCE GENERATOR
+1V
+1.5V
+6V
LF-Z
LF-Z
+15V @140MA
-15V @170MA
A. GND
+5V @20MA
D. GND
PIN 14 OF U19 & U20
PIN 7 OF U19 & U20
THD 001-□
SIZE D
CODE IDENT NO. 20747
460-0906-□
REV R
SCALE
SHEET 5

REVISIONS			
REV	DESCRIPTION	DATE	APPROVED
P	REVISED PER ECO #19803 (FTB)	08/15/90	J. Boytim
T	REVISED PER ECO 22042	12/12/91	D. Duckett

THE FOLLOWING NUMBERS ARE NOT USED: CR24, R27, R58, R133, R137, R184, R226.

		CONTRACT NO.	
		DRAWN L. Wowk / J. Hartzell 1/72	DATE 08/17/90
		CHECKED R. Olivieri	04/26/72
		DRAFTING Sampedro	10/12/72
		APPROVED R. Wasserman	08/01/72
	9412	APPROVED R. Clegg	10/25/72
NEXT ASSY	USED ON	APPROVED Heller	10/16/72
APPLICATION			

AYDIN COMPUTER AND MONITOR Division
700 DRESHER ROAD HORSHAM. PA 19044

PARTS LIST
CARD ASSEMBLY
THRESHOLD DETECTORS
THD001-1

SIZE	CAGE CODE	DWG NO	REV
A	20747	PL460-0906-501	T

SCALE NONE | SHEET 1 of 6

800-0015E

PARTS LIST	DESIGN ACTIVITY IDENTIFICATION AYDIN COMPUTER AND MONITOR DIVISION HORSHAM, PA. 19044	CONTRACT NO.	CAGE CODE 20747	PL460-0906-501	REV T

LIST TITLE THD001-1	SUBCONTRACT NO.		SHEET NO. 2

FIND NO	QTY REQ	U/M	CAGE CODE	DOCUMENT NUMBER	PART OR IDENTIFYING NUMBER	NOMENCLATURE OR DESCRIPTION	NOTES
001	1	EA	20747	400-1098	400-1098	PWB TH001	
002	1	EA	11769	108-203-041	7022-041-000001	CONN FING BLOC 41 POS	
007	12	EA	71590	102-422-104	K104M20Z5UFVBWN	CAP .1UF 50V 20%	C1 C11 C14 C15 C16 C17 C18 C19 C20 C21 C22 C23
011	6	EA	56289	102-305-225	150D225X0020A2	CAP 2.2UF 20V 20%	C5 C6 C7 C8 C9 C13
013	2	EA	14752	102-001-473	230B1B473	CAP .047UF 100V 20%	C30 C32
014	2	EA	56289	102-305-156	150D156X0020B2	CAP 15UF 20V 20%	C31 C33
019	3	EA	07263	104-503-012	1N4448	DIODE SIG MINIATURE	CR1 CR2 CR3
020	2	EA	04713	104-056-110	1N755A	DIODE ZENER CASE 51	CR4 CR8
021	1	EA	04713	104-056-104	1N757A	DIODE ZENER CASE 51	CR5
022	12	EA	04713	104-061-001	MBD101	DIODE HOT-CARRIER	CR6 CR7 CR16 CR17 CR18 CR19 CR20 CR21 CR27 CR28 CR29 CR30
025	1	EA	81349	104-308-006	1N821A	DIODE ZENER SILICON	CR9
026	16	EA	01295	104-503-014	1N4531	DIODE SIG MINIATURE	CR10 CR11 CR13 CR14 CR15 CR22 CR23 CR25 CR26 CR31 CR32 CR33 CR35 CR36 CR37 CR38
031	3	EA	04713	104-056-105	1N753A	DIODE ZENER CASE 51	CR12 CR34 CR39
035	10	EA	04713	103-304-001	2N4126	TRANS SIL PNP TO-92	Q1 Q2 Q4 Q5 Q6 Q7 Q10 Q11 Q14 Q15
037	13	EA	04713	103-408-001	2N4124	TRANS SIL NPN TO-92	Q3 Q8 Q9 Q12 Q13 Q16 Q17 Q18 Q19 Q20 Q21 Q22 Q23
041	4	EA	91637	100-038-680	CCF-50-68R0-F	MTFLM 68 OHM .125W 5%	R1 R2 R45 R46

PARTS LIST	DESIGN ACTIVITY IDENTIFICATION AYDIN COMPUTER AND MONITOR DIVISION HORSHAM, PA. 19044	CONTRACT NO.	CAGE CODE 20747	PL460-0906-501	REV T

LIST TITLE THD001-1	SUBCONTRACT NO.		SHEET NO. 3

FIND NO	QTY REQ	U/M	CAGE CODE	DOCUMENT NUMBER	PART OR IDENTIFYING NUMBER	NOMENCLATURE OR DESCRIPTION	NOTES
042	71	EA	91637	100-038-101	CFF-50-1000-F	MTFLM 100 OHM. 125W 5%	R3 R6 R18 R19 R21 R24 R25 R47 R53 R62 R63 R74 R75 R83 R84 R85 R86 R87 R90 R105 R106 R112 R113 R114 R115 R116 R120 R134 R135 R141 R140 R144 R151 R153 R158 R159 R171 R172 R176 R177 R178 R182 R186 R187 R188 R189 R196 R197 R204 R205 R206 R207 R208 R210 R213 R218 R219 R224 R225 R228 R229 R230 R234 R235 R238 R239 R242 R243 R246 R247 R249 R250 R217
058	2	EA	91637	100-038-472	CCF-50-4701-F	MTFLM 4.7K .125W 5%	R4 R92
059	7	EA	91637	100-038-272	CCF-50-2701-F	MTFLM 2.7K .125W 5%	R5 R93 R183 R185 R198 R241 R248
061	3	EA	81349	100-255-4990	RNC55H4990F	MTFLM 499 OHM .1W 1%	R7 R51 R79
063	6	EA	81349	100-255-1000	RNC55H1000F	MTFLM 100 OHM .1W 1%	R8 R9 R20 R22 R49 R48
065	2	EA	91637	100-038-561	CCF-50-5600-F	MTFLM 560 OHM. 125W 5%	R10 R50

PARTS LIST	DESIGN ACTIVITY IDENTIFICATION: AYDIN COMPUTER AND MONITOR DIVISION, HORSHAM, PA. 19044	CONTRACT NO.	CAGE CODE: 20747	PL460-0906-501	REV: T
LIST TITLE: THD001-1		SUBCONTRACT NO.			SHEET NO.: 4

FIND NO	QTY REQ	U/M	CAGE CODE	DOCUMENT NUMBER	PART OR IDENTIFYING NUMBER	NOMENCLATURE OR DESCRIPTION	NOTES
066	45	EA	91637	100-038-470	CCF-50-47R0-F	MTFLM 47 OHM .125W 5%	R11 R12 R13 R14 R15 R31 R32 R37 R39 R54 R55 R56 R57 R59 R94 R95 R96 R99 R100 R101 R102 R103 R107 R108 R124 R129 R131 R147 R149 R157 R164 R167 R168 R175 R179 R180 R181 R194 R195 R199 R200 R236 R237 R244 R245
075	7	EA	91637	100-038-152	CCF-50-1501-F	MTFLM 1.5K .125W 5%	R16 R43 R72 R132 R190 R193 R223
077	8	EA	91637	100-038-182	CCF-50-1801-F	MTFLM 1.8K .125W 5%	R17 R23 R60 R117 R126 R138 R161 R209
080	12	EA	91637	100-038-102	CCF-50-1001-F	MTFLM 1K .125W 5%	R26 R40 R42 R67 R68 R70 R104 R160 R162 R191 R232 R251
085	1	EA	91637	100-038-681	CCF-50-6800-F	MTFLM 680 OHM.125W 5%	R28
086	4	EA	91637	100-038-750	CCF-50-75R0-5%	MTFLM 75 OHM .125W 5%	R29 R30 R231 R233
088	1	EA	81349	100-017-SBT	RCO7GFSBTJ	RES SBT 1/8W 5%	R33
090	12	EA	91637	100-038-153	CCF-50-1502-F	MTFLM 15K .125W 5%	R34 R38 R123 R125 R127 R146 R156 R163 R192 R211 R212 R214
094	2	EA	81349	100-046-3651	RNC50H3651FS	RES MIL 3.65K .05W 1% S FR	R35 R122
095	7	EA	81349	100-255-3651	RNC55H3651F	MTFLM 3.65K .1W 1%	R36 R142 R166 R215 R216 R220 R221

PARTS LIST	DESIGN ACTIVITY IDENTIFICATION: AYDIN COMPUTER AND MONITOR DIVISION, HORSHAM, PA. 19044	CONTRACT NO.	CAGE CODE: 20747	PL460-0906-501	REV: T

LIST TITLE: THD001-1	SUBCONTRACT NO.		SHEET NO.: 5

FIND NO	QTY REQ	U/M	CAGE CODE	DOCUMENT NUMBER	PART OR IDENTIFYING NUMBER	NOMENCLATURE OR DESCRIPTION	NOTES
098	2	EA	91637	100-038-133	CCF-50-1302-F	MTFLM 13K .125W 5%	R41 R69
099	2	EA	91637	100-038-822	CCF-50-8201-F	MTFLM 8.2K .125W 5%	R44 R71
100	1	EA	91637	100-038-392	CMF-50-392-5%	MTFLM 3.9K .125W 5%	R52
101	5	EA	81349	100-255-2001	RNC55H2001F	MTFLM 2K .1W 1%	R61 R65 R150 R152 R155
103	1	EA	81349	100-046-2001	RNC50H2001FS	RES MIL 2K .05W 1% S FR	R64
104	2	EA	81349	100-255-5361	RNC55H5361F	MTFLM 5.36K .1W 1%	R66 R154
105	2	EA	91637	100-038-912	CCF-50-9101-F	MTFLM 9.1K .125W 5%	R73 R76
106	1	EA	81349	100-255-2490	RNC55H2490F	MTFLM 249 OHM .1W 1%	R77
107	2	EA	91637	100-038-682	CCF-50-6801-F	MTFLM 6.8K .125W 5%	R78 R81
108	1	EA	81349	100-255-2321	RNC55H2321F	MTFLM 2.32K .1W 1%	R80
109	1	EA	91637	100-038-821	CCF-50-8200-F	MTFLM 820 OHM .125W 5%	R82
110	2	EA	81349	100-046-7500	RNC50H7500FS	RES MIL 750 OHM .05W 1% S FR	R88 R89
111	1	EA	91637	100-038-162	CCF-50-1601-F	MTFLM 1.6K .125W 5%	R91
112	1	EA	91637	100-038-221	CFF-50-2200-F	MTFLM 220 OHM.125W 5%	R97
113	2	EA	91637	100-038-302	CCF-50-3001-F	MET FLM 3KOHM .125W 5%	R98 R109
114	8	EA	81349	100-255-3741	RNC55H3741F	MTFLM 3.74K .1W 1%	R110 R111 R118 R119 R139 R145 R202 R203
116	2	EA	91637	100-038-163	CCF-50-1602-F	MTFLM 16K .125W 5%	R121 R148
117	3	EA	81349	100-255-1211	RNC55H1211F	MTFLM 1.21K .1W 1%	R128 R143 R165
118	3	EA	91637	100-038-103	CCF-50-1002-F	MTFLM 10K .125W 5%	R130 R201 R240
122	5	EA	81349	100-255-1501	RNC55H1501F	MTFLM 1.5K .1W 1%	R136 R169 R173 R222 R227
125	1	EA	81349	100-255-1271	RNC55H1271F	MTFLM 1.27K .1W 1%	R170

PARTS LIST	DESIGN ACTIVITY IDENTIFICATION AYDIN COMPUTER AND MONITOR DIVISION HORSHAM, PA. 19044	CONTRACT NO.	CAGE CODE 20747	PL460-0906-501	REV T

LIST TITLE THD001-1	SUBCONTRACT NO.		SHEET NO. 6

FIND NO	QTY REQ	U/M	CAGE CODE	DOCUMENT NUMBER	PART OR IDENTIFYING NUMBER	NOMENCLATURE OR DESCRIPTION	NOTES
126	1	EA	81349	100-255-1001	RNC55H1001F	MTFLM 1K .1W 1%	R174
127	1	EA	71450	100-106-036	750-101-R2.2K	RESNET 9BUSD 2.2K	RN1
129	7	EA	86684	139-209-002	CA3046	TRANS ARRAY	U1 U2 U3 U5 U8 U10 U15
132	11	EA	86684	139-209-009	CA3054	TRANS/DIODE ARRAY	U4 U6 U7 U9 U11 U12 U13 U14 U16 U17 U18
134	1	EA	01295	139-198-409	SN74LS09N	QUAD 2IN PAND OC 14P	U19
135	1	EA	01295	139-198-403	SN74LS03N	QUAD 2IN PNAND 14P	U20
				AT 297-0451		ACCEPTANCE TEST PROCEDURE - THD001-1	

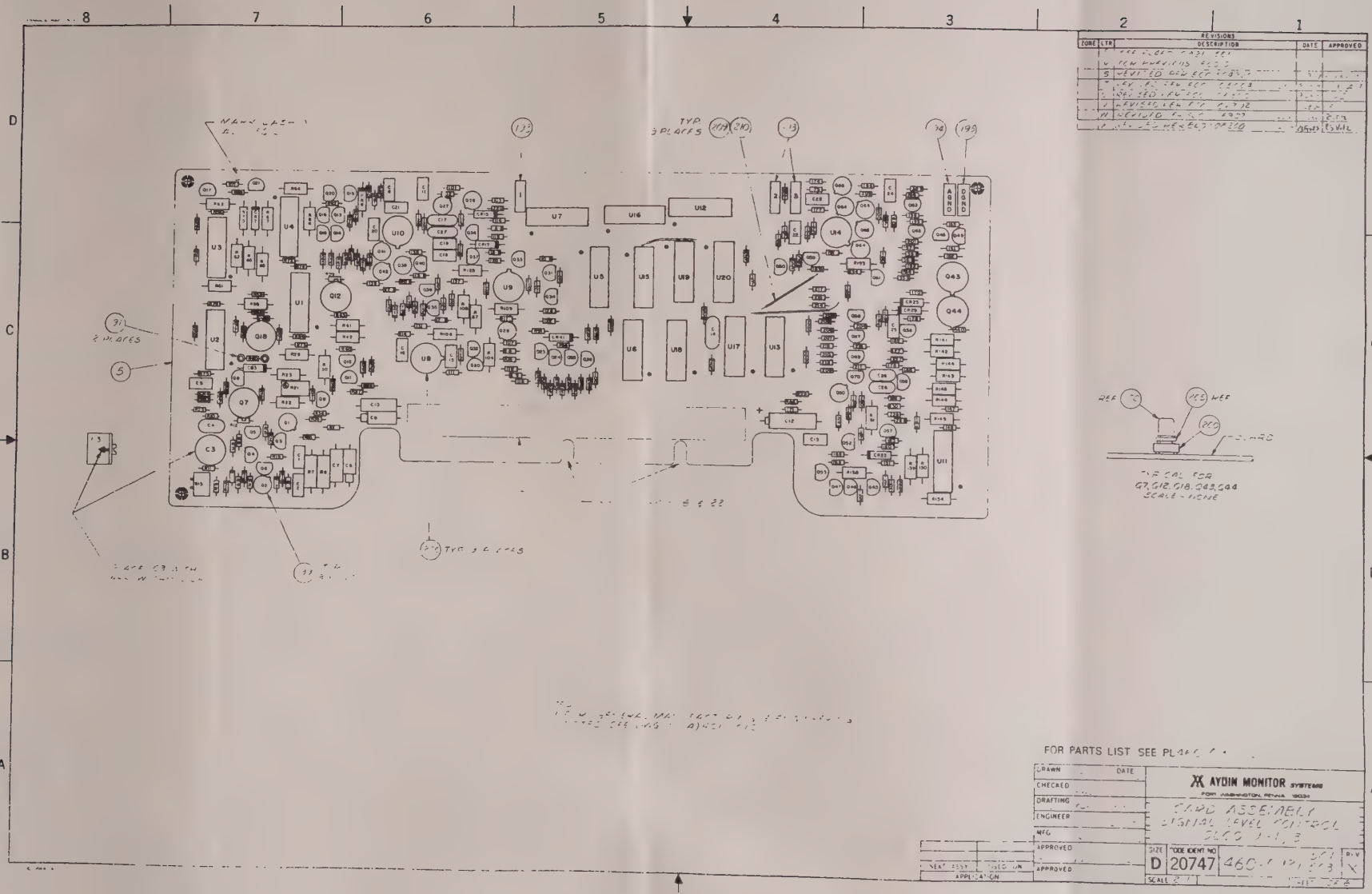
REVISIONS
ZONE LTR DESCRIPTION DATE APPROVED
TYP 3 PLACES
TYP CAL FOR Q7,Q12,Q18,Q43,Q44
SCALE - NONE
FOR PARTS LIST SEE PL
DRAWN DATE
CHECKED
DRAFTING
ENGINEER
MFG
APPROVED
APPROVED
NEXT ASSY USED ON
APPLICATION
AYDIN MONITOR SYSTEMS
CARD ASSEMBLY
SIZE D
CODE IDENT NO 20747
SCALE 2/1
REV

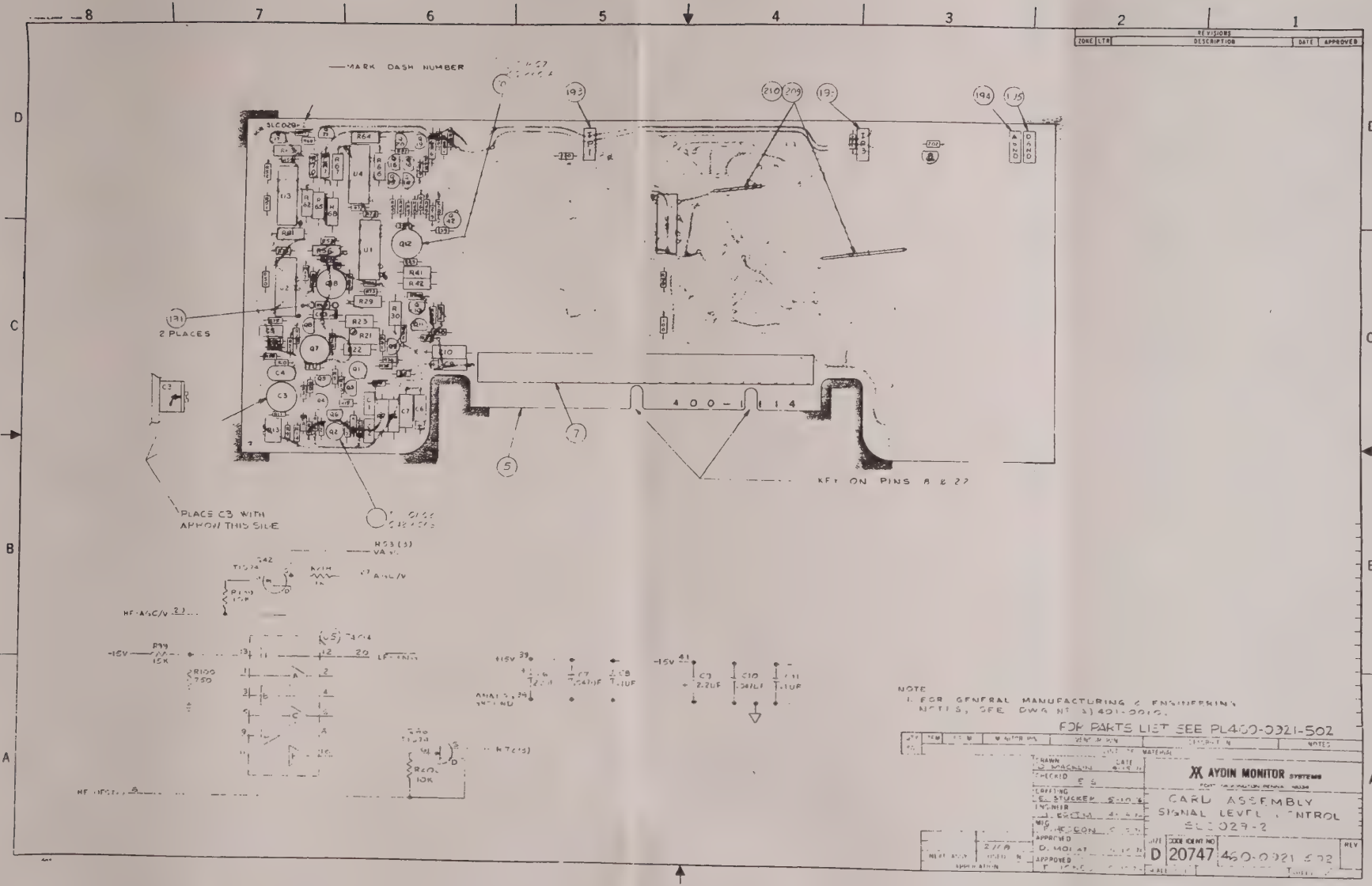
MARK DASH NUMBER
2 PLACES
PLACE C3 WITH ARROW THIS SIDE
KEY ON PINS 8 & 22
400-1114
NOTE
1. FOR GENERAL MANUFACTURING & ENGINEERING NOTES, SEE DWG NO 3)401-0015.
FOR PARTS LIST SEE PL400-0021-502
AYDIN MONITOR SYSTEMS
CARD ASSEMBLY
SIGNAL LEVEL CONTROL
SLC029-2
D
20747
400-0021-502

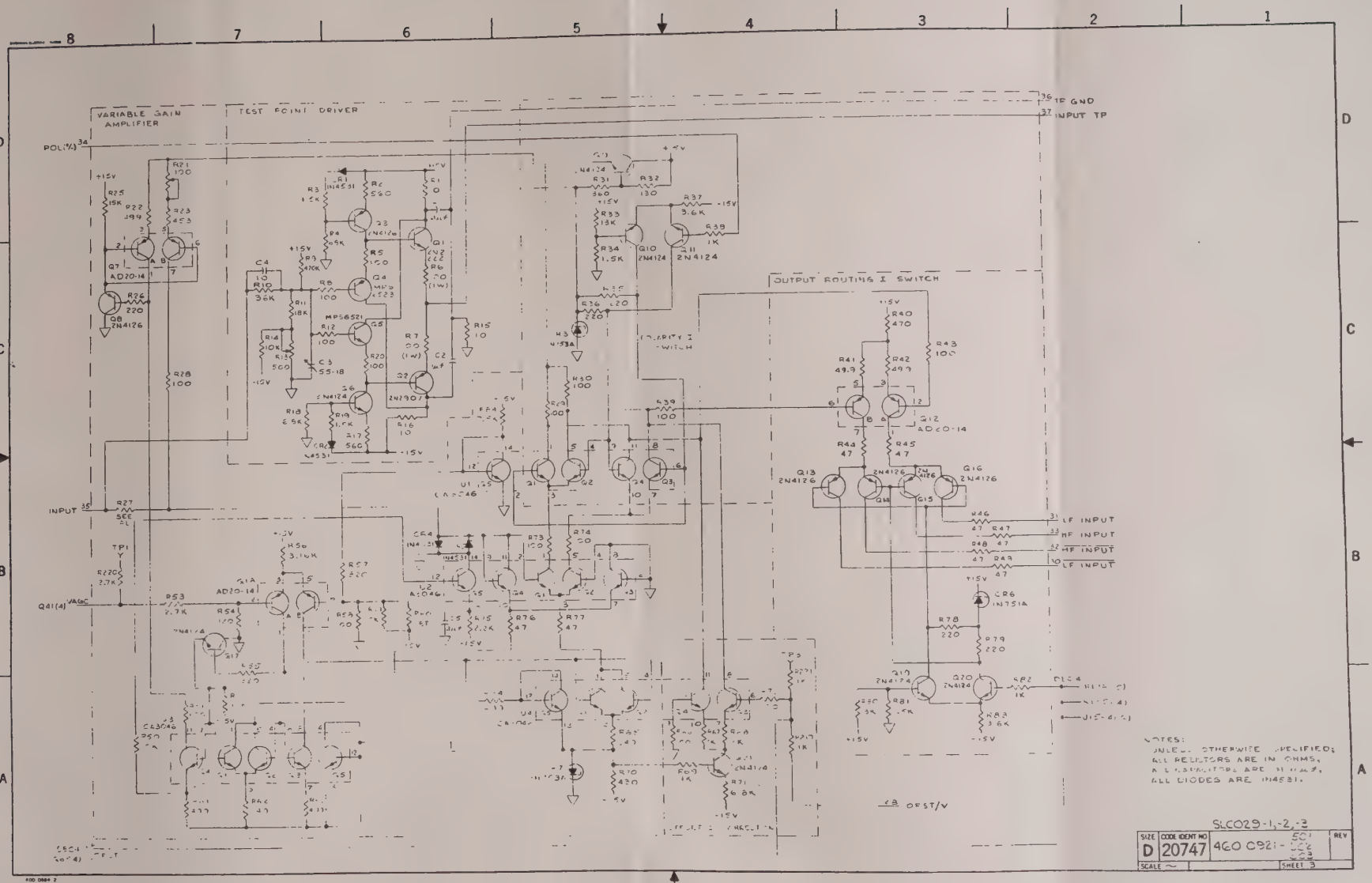
VARIABLE GAIN AMPLIFIER
TEST POINT DRIVER
OUTPUT ROUTING I SWITCH
POL(%)
INPUT
Q41(4) VAGC
TP GND
INPUT TP
LF INPUT
HF INPUT
HF INPUT
LF INPUT
OFST/V
NOTES:
UNLESS OTHERWISE SPECIFIED;
ALL RESISTORS ARE IN OHMS,
ALL CAPACITORS ARE IN μμF,
ALL DIODES ARE IN4531.
SLC029-1,-2,-3
SIZE D
CODE IDENT NO 20747
460 0921-
REV
SCALE ~
SHEET 3

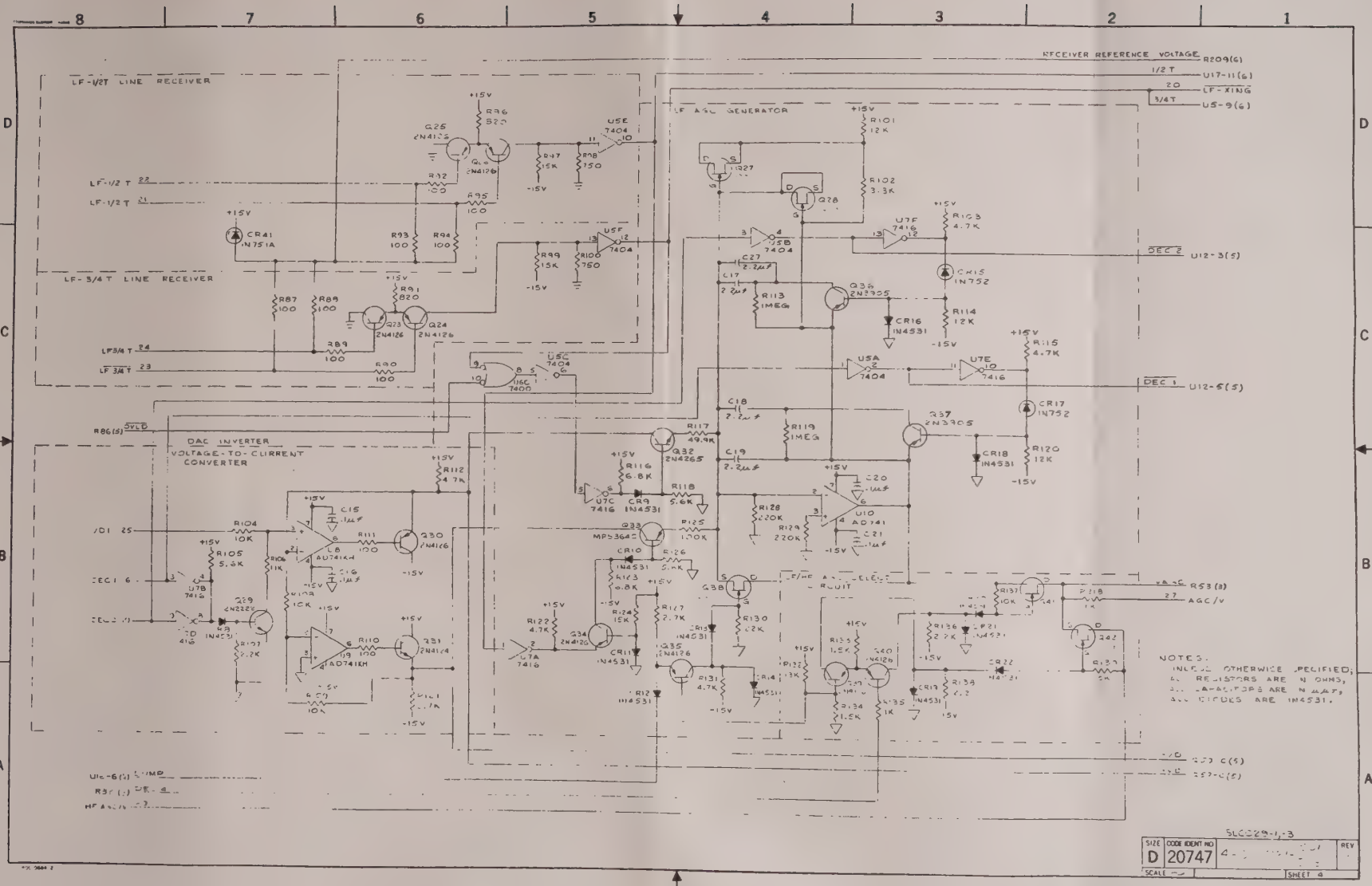
LF-1/2T LINE RECEIVER
LF-3/4T LINE RECEIVER
DAC INVERTER
VOLTAGE-TO-CURRENT
CONVERTER
LF AGC GENERATOR
RECEIVER REFERENCE VOLTAGE
LF-XING
DEC 1
DEC 2
NOTES:
UNLESS OTHERWISE SPECIFIED;
ALL RESISTORS ARE IN OHMS,
ALL CAPACITORS ARE IN μFARADS,
ALL DIODES ARE IN4531.
SIZE D
CODE IDENT NO 20747
SCALE —
SHEET 4
5LC029-1-3

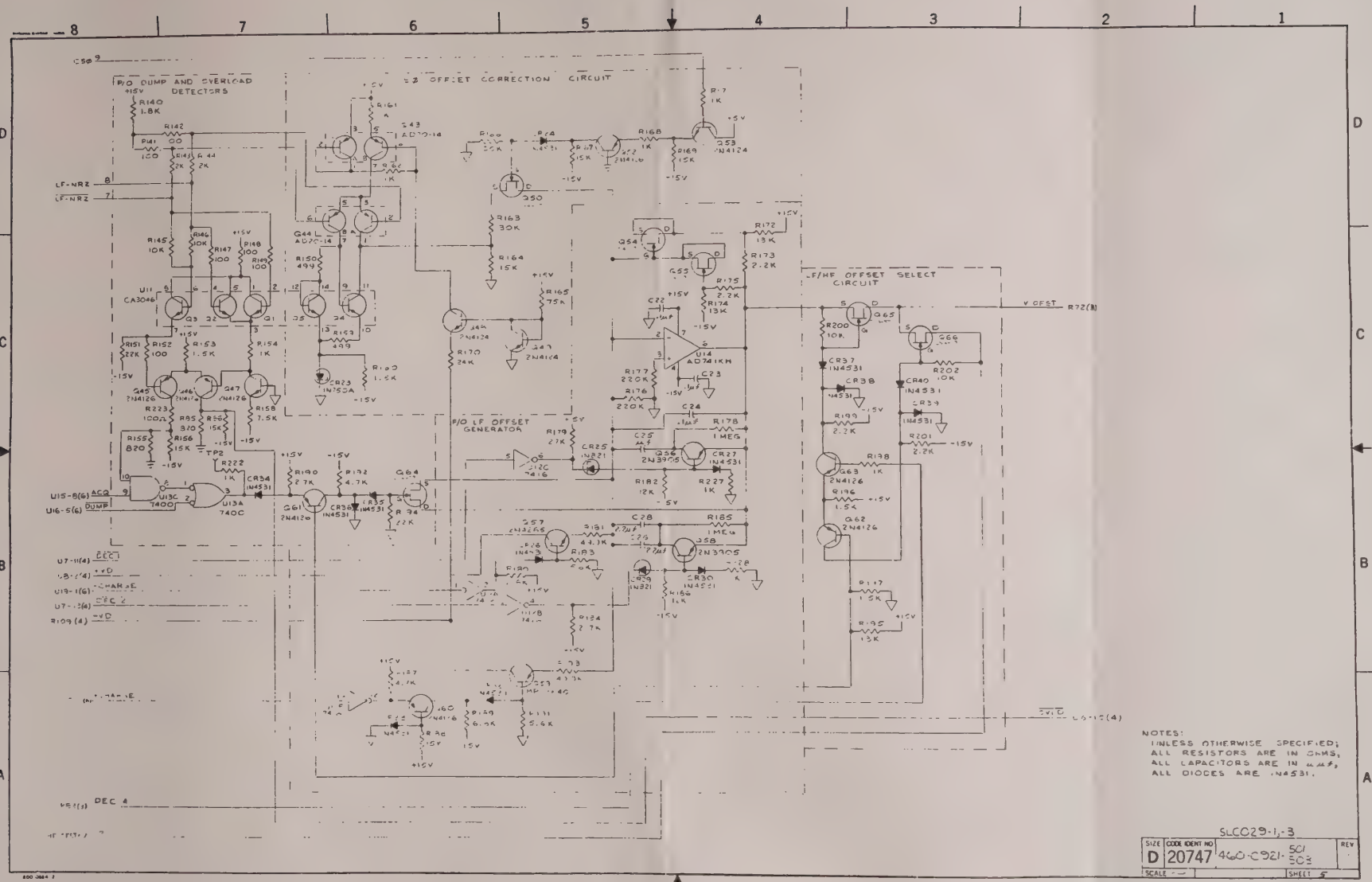
P/O DUMP AND OVERLOAD DETECTORS
OFFSET CORRECTION CIRCUIT
LF/HF OFFSET SELECT CIRCUIT
P/O LF OFFSET GENERATOR
LF-NRZ
LF-NRZ
V OFST
R72(B)
U15-8(6) ACQ
U16-5(6) DUMP
U7-11(4) DEC 1
U8-2(4) +VD
U19-1(6) -CHARGE
U7-13(4) DEC 2
R109(4) +VD
DEC 4
NOTES:
UNLESS OTHERWISE SPECIFIED;
ALL RESISTORS ARE IN OHMS,
ALL CAPACITORS ARE IN μμf,
ALL DIODES ARE 1N4531.
SLC029-1,-3
SIZE D
CODE IDENT NO 20747
460-C921-501 503
REV
SCALE
SHEET 5

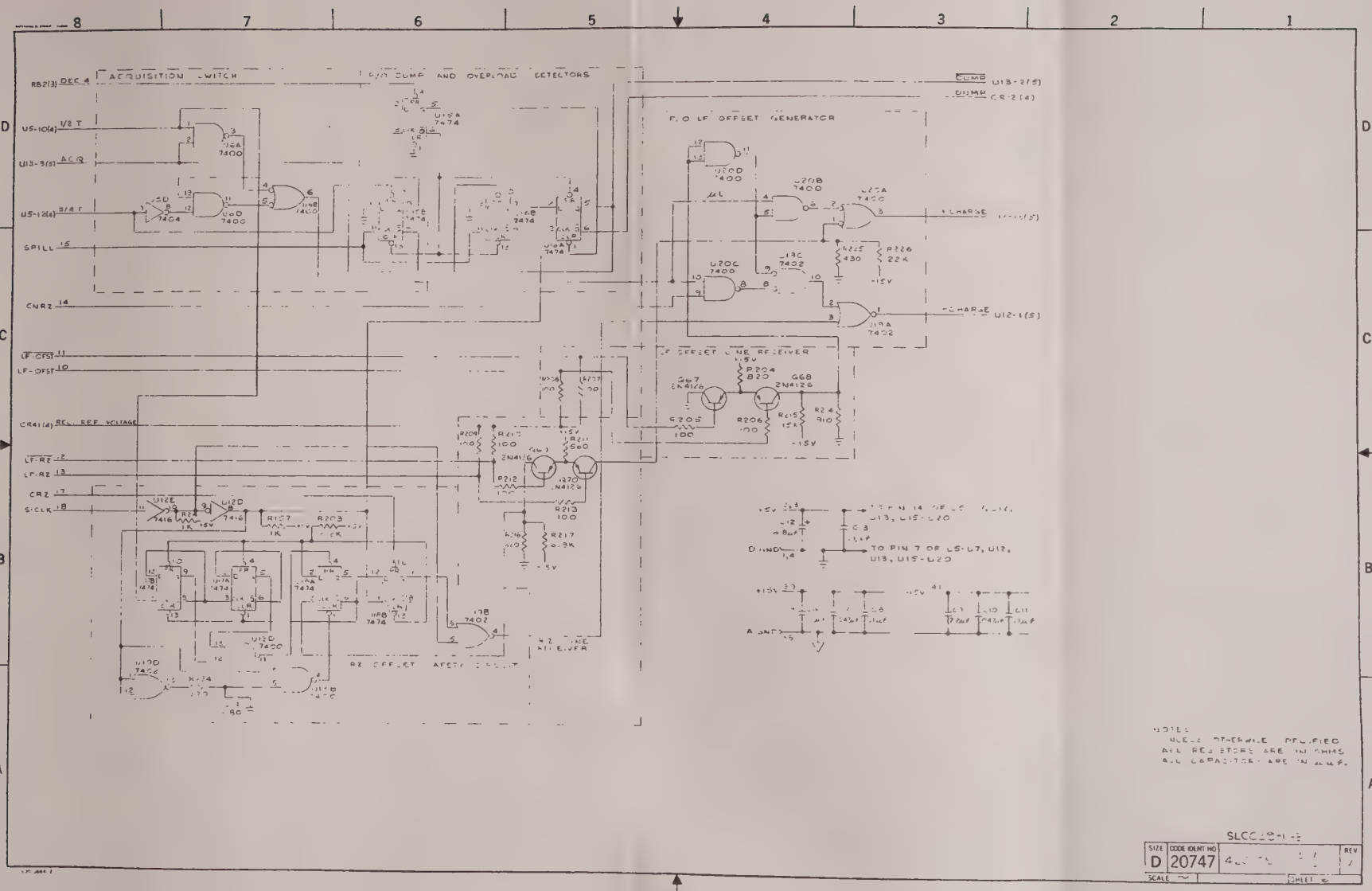
ACQUISITION SWITCH
LOW DUMP AND OVERLOAD DETECTORS
F.O LF OFFSET GENERATOR
LF OFFSET LINE RECEIVER
RB2(3) DEC 4
U5-10(4) 1/2 T
U13-3(5) ACQ
U5-12(4) 3/4 T
SPILL 15
CNRZ 14
LF-OFST 11
LF-OFST 10
CR41(4) REC. REF. VOLTAGE
LF-RZ 12
LF-RZ 13
CRZ 17
S-CLK 18
DUMP U13-2(5)
DUMP CR-2(4)
+CHARGE
+CHARGE U12-1(5)
RZ OFFSET
TO PIN 14 OF LS-L7, U12, U13, U15-U20
TO PIN 7 OF LS-L7, U12, U13, U15-U20
A GND
NOTE:
UNLESS OTHERWISE SPECIFIED
ALL RESISTORS ARE IN OHMS
ALL CAPACITORS ARE IN MFD.
SLCC2871-1
SIZE D
CODE IDENT NO 20747
REV 1
SCALE
SHEET

REVISIONS

REV	DESCRIPTION	EFFECTIVE ON S/N	DATE	APPROVED
E	REVISED PER ECO 460-0921E		2·6·73	F. HINKLE
F	REVISED PER ECO 460-0921F		3·1·73	F. HINKLE
G	REVISED PER ECO 460-0921G		4·4·73	F. HINKLE
H	REVISED PER ECO 460-0921H		5·27·73	F. HINKLE
L	REVISED PER ECO 00808		5·13·75	J. NEWBY
M	REVISED PER ECO 01727		[illegible]·4·76	D. MOUAT
N	REVISED PER ECO 02082		7·16·77	J. NEWBY
P	REVISED PER ECO 02254		5·27·77	J. NEWBY
R	REVISED PER ECO 03604		11·78	D. MOUAT
S	REVISED PER ECO 04220		7·19·79	F. HINKLE
T	REVISED PER ECO 05004		3·18·80	D. MOUAT
U	REVISED PER ECO 06800		4·28·81	R. VOLZ
V	REVISED PER ECO 06792		9·28·81	E. S.
W	REVISED PER ECO 07011		11·24·81	R. VOLZ
X	REVISED PER ECO 07284		2·26·82	M. LEVY
AA	REVISED PER ECO 11649		7·[illegible]	[illegible]
AB	REVISED PER ECO 15571		11-9-87	R.T. Gunn
AC	REVISED PER ECO 16358		4-12-88	R.T. Gunn

SHEET	1	2	3	4	5	6	7	8	9	10	11	12	13	14	15	16	17	18	19	20	21	22	23
REVISION																							

AYDIN MONITOR SYSTEMS
FORT WASHINGTON, PENNA. 19034

TITLE PARTS LIST
SIGNAL LEVEL CONTROL
SLC029-1

CODE IDENT 20747
CONTRACT NO. 9412

DRAWN	J HARTZEL	[illegible]·3·72	ENGINEER	WASSERMAN	3·10·72	DWG NO. PL 460-0921-501	REV AC
CHECKED	K. HOUSEAL	9·27·72	APPROVED	R CLEGG	[illegible]·26·72		
DRAFTING	J. SAMPEDRO	10·[illegible]·72				SHEET 1 OF 7	

800-0066

PARTS LIST	DESIGN ACTIVITY IDENTIFICATION AYDIN COMPUTER AND MONITOR DIVISION HORSHAM, PA. 19044	CONTRACT NO. 9412	CAGE CODE 20747	PL460-0921-501	RE AC

LIST TITLE SLC029-1	SUBCONTRACT NO.		SHEET NO. 2

FIND NO	QTY REQ	U/M	CAGE CODE	DOCUMENT NUMBER	PART OR IDENTIFYING NUMBER	NOMENCLATURE OR DESCRIPTION	NOTES
005	1	EA		400-1114	400-1114	PWB SLC029	
007	1	EA	91662	108-203-041	7022-041-000001	CONN FING BLOC 41 POS	
010	12	EA	71590	102-419-104	CK06BX104M	CAP .1UF 100V 20%	C1 C2 C5 C8 C11 C13 C15 C16 C20 C21 C22 C23
013	1	EA	18796	102-801-002	DV11PS18A	CAP TRIMR 5.5-18 PF	C3
014	1	EA		102-109-100	DM10100D	CAP 10PF 500V 5%	C4
015	2	EA	56289	102-305-225	150D225X0020A2	CAP 2.2UF 20V 20%	C6 C9
016	2	EA	14752	102-001-473	230B1B473	CAP .047UF 100V 20%	C7 C10
017	1	EA		102-313-685	150D685X0006A2	CAP 6.8UF 6V 20%	C12
018	1	EA	84171	102-101-681	DM15681J	MICA 680 PF 300V 5%	C14
019	5	EA	71590	102-432-001	CZ40C225M	CAP 2.2UF 50V 20%	C17 C18 C26 C27 C28
020	2	EA		102-418-104	CW30A104K	CAP .1UF 100V 10%	C19 C24
021	1	EA	72982	102-419-105	RPE114Z5U105M100V	CAP 1UF 100V 20%	C25
025	30	EA	01295	104-503-014	1N4531	DIODE SIG MINIATURE	CR1 CR2 CR4 CR5 CR8 CR9 CR10 CR11 CR12 CR13 CR14 CR16 CR18 CR19 CR20 CR21 CR22 CR24 CR26 CR27 CR30 CR32 CR33 CR34 CR35 CR36 CR37 CR38 CR39 CR40
028	2	EA	04713	104-056-105	1N753A	DIODE ZENER CASE 51	CR3 CR7
029	2	EA	04713	104-056-106	1N751A	DIODE ZENER CASE 51	CR6 CR41
030	2	EA		104-056-111	1N752A	DIODE ZENER CASE 51	CR15 CR17
031	1	EA	04713	104-056-112	1N750A	DIODE ZENER CASE 51	CR23
032	2	EA	04713	104-308-006	IN821A	DIODE ZENER SILICON	CR25 CR29
036	3	EA	11502	100-038-100	RG1/8-10-OHM-5%	MTFLM 10 OHM.125W 5%	R1 R15 R16

PARTS LIST	DESIGN ACTIVITY IDENTIFICATION AYDIN COMPUTER AND MONITOR DIVISION HORSHAM, PA. 19044	CONTRACT NO. 9412	CAGE CODE 20747	PL460-0921-501	REV AC

LIST TITLE SLC029-1	SUBCONTRACT NO.		SHEET NO. 3

FIND NO	QTY REQ	U/M	CAGE CODE	DOCUMENT NUMBER	PART OR IDENTIFYING NUMBER	NOMENCLATURE OR DESCRIPTION	NOTES
037	3	EA	91637	100-038-561	CCF-50-5600-F	MTFLM 560 OHM.125W 5%	R2 R17 R211
038	11	EA	91637	100-038-152	CCF-50-1501-F	MTFLM 1.5K .125W 5%	R3 R19 R34 R81 R133 R134 R153 R160 R164 R196 R197
042	8	EA	91637	100-038-682	CCF-50-6801-F	MTFLM 6.8K .125W 5%	R4 R18 R71 R116 R123 R180 R189 R217
045	34	EA	91637	100-038-101	CFF-50-1000-F	MTFLM 100 OHM.125W 5%	R5 R8 R12 R20 R28 R39 R43 R51 R58 R72 R73 R74 R87 R88 R89 R90 R92 R93 R94 R95 R110 R111 R147 R148 R152 R205 R206 R207 R208 R209 R210 R212 R213 R223
050	2	EA		100-432-101	AS-1-100 OHM,5%	WRE/WD 100 OHM 1W 5%	R6 R7
051	1	EA		100-038-474	CCF-50-4703-F	MTFLM 470K .125W 5%	R9
052	1	EA		100-038-363	CCF-50-3602-F	MTFLM 36K .125W 5%	R10
053	1	EA		100-038-183	CCF-50-1802-F	MTFLM 18K .125W 5%	R11
054	1	EA		101-116-104	502-005-500	WRE/WD POT 500K.6W 5%	R13
055	7	EA	91637	100-038-103	CCF-50-1002-F	MTFLM 10K .125W 5%	R14 R50 R59 R137 R139 R200 R202
058	1	EA		101-101-018	3290W-1-101	WRE/WD POT 100 OHM 1W	R21
059	6	EA	20747	100-215-4990	100-215-4990	REPLACE W/100-255-4990	R22 R61 R63 R64 R150 R159
061	1	EA	20747	100-215-4530	100-215-4530	REPLACE W/100-255-4530	R23
062	16	EA	91637	100-038-102	CCF-50-1001-F	MTFLM 1K .125W 5%	R24 R38 R69 R82 R135 R157 R168 R171 R198 R218 R219 R220 R221 R222 R227 R228

PARTS LIST	DESIGN ACTIVITY IDENTIFICATION: AYDIN COMPUTER AND MONITOR DIVISION, HORSHAM, PA. 19044	CONTRACT NO. 9412	CAGE CODE 20747	PL460-0921-501	REV AC
LIST TITLE: SLC029-1		SUBCONTRACT NO.			SHEET NO. 4

FIND NO	QTY REQ	U/M	CAGE CODE	DOCUMENT NUMBER	PART OR IDENTIFYING NUMBER	NOMENCLATURE OR DESCRIPTION	NOTES
067	11	EA	91637	100-038-153	CCF-50-1502-F	MTFLM 15K .125W 5%	R25 R52 R86 R97 R99 R124 R156 R167 R169 R188 R215
071	6	EA		100-038-221	CFF-50-2200-F	MTFLM 220 OHM.125W 5%	R26 R35 R36 R55 R78 R79
073	6	EA		100-038-123	CCF-50-1202-F	MTFLM 12K .125W 5%	R27 R101 R114 R120 R182 R186
075	6	EA	81349	100-215-1000	100-215-1000	USE (100-255-1000)	R29 R30 R141 R142 R66 R149
076	1	EA		100-038-361	CCF-50-3600-F	MTFLM 360 OHM.125W 5%	R31
077	1	EA		100-038-131	CCF-50-1300-F	MTFLM 130 OHM.125W 5%	R32
078	6	EA		100-038-133	CCF-50-1302-F	MTFLM 13K .125W 5%	R33 R80 R132 R172 R174 R195
080	2	EA	91637	100-038-362	CCF-50-3601-F	MTFLM 3.6K .125W 5%	R37 R83
081	1	EA	91637	100-038-471	CCF-4700-F	MTFLM 470 OHM.125W 5%	R40
082	2	EA	20747	100-215-49R9	100-215-49R9	REPLACE W/ 100-255-49R9	R41 R42
083	8	EA	91637	100-038-470	CCF-50-47R0-F	MTFLM 47 OHM .125W 5%	R44 R45 R46 R47 R48 R49 R76 R77
084	6	EA	91637	100-038-272	CCF-50-2701-F	MTFLM 2.7K .125W 5%	R53 R121 R127 R179 R184 R190
086	1	EA	91637	100-038-121	RG1/8-120OHM-5%	MTFLM 120 OHM.125W 5%	R54
087	1	EA	20747	100-215-3161	100-215-3161	USE 100-255-3161	R56
089	6	EA		100-038-821	CCF-50-8200-F	MTFLM 820 OHM .125W 5%	R57 R85 R91 R96 R155 R204
091	1	EA	81349	100-017-SBT	RCD7GFSBTJ	RES SBT 1/8W 5%	R60
092	2	EA	81349	100-215-2490	100-215-2490	REPLACE W/ 100-255-2490	R62 R65
094	4	EA	20747	100-215-2001	100-215-2001	REPLACE W/100-255-2001	R67 R68 R143 R144
095	1	EA	91637	100-037-431	CCF-07-431-J	MTFLM 430 OHM .25W 5%	R70

PARTS LIST	DESIGN ACTIVITY IDENTIFICATION AYDIN COMPUTER AND MONITOR DIVISION HORSHAM, PA. 19044	CONTRACT NO. 9412	CAGE CODE 20747	PL460-0921-501	REV AC

LIST TITLE SLC029-1	SUBCONTRACT NO.		SHEET NO. 5

FIND NO	QTY REQ	U/M	CAGE CODE	DOCUMENT NUMBER	PART OR IDENTIFYING NUMBER	NOMENCLATURE OR DESCRIPTION	NOTES
096	9	EA	91637	100-038-222	CCF-50-2201-F	MTFLM 2.2K .125W 5%	R75 R107 R136 R138 R173 R175 R199 R201 R203
099	1	EA	20747	100-017-752	100-017-752	OBSOL USE100-038-752	R84
100	2	EA		100-038-751	CCF-50-7500-F	MTFLM 750 OHM.125W 5%	R98 R100
101	1	EA	91637	100-038-332	CCF-50-3301-F	MTFLM 3.3K .125W 5%	R102
102	7	EA	91637	100-038-472	CCF-50-4701-F	MTFLM 4.7K .125W 5%	R103 R112 R115 R122 R131 R187 R192
105	5	EA	81349	100-215-1002	100-215-1002	USE 100-255-1002	R104 R108 R109 R145 R146
107	5	EA	91637	100-038-562	CCF-50-5601-F	MTFLM 5.6K .125W 5%	R105 R118 R126 R183 R191
109	1	EA	20747	100-215-1101	100-215-1101	REPLACE W/ 100-255-1101	R106
111	4	EA	91637	100-038-105	CCF-50-1004-F	MTFLM 1 MEG .125W 5%	R113 R119 R178 R185
113	3	EA	20747	100-215-4992	100-215-4992	REPLACE W/100-255-4992	R117 R181 R193
114	1	EA	20747	100-215-1003	100-215-1003	USE 100-255-1003	R125
115	4	EA	91637	100-038-224	CCF-50-2203-F	MTFLM 220K .125W 5%	R128 R129 R176 R177
117	4	EA		100-038-223	CCF-50-2202-F	MTFLM 22K .125W 5%	R130 R151 R194 R226
119	1	EA		100-038-182	CCF-50-1801-F	MTFLM 1.8K .125W 5%	R140
120	1	EA	81349	100-215-1001	100-215-1001	USE 100-255-1001	R154
121	1	EA	20747	100-215-7501	100-215-7501	USE 100-255-7501	R158
122	2	EA	81349	100-222-1001	RN50C1001F	MTFLM 1K .05W 1%	R161 R162
123	1	EA		100-038-303	CCF-50-3002-F	MTFLM 30K .125W 5%	R163
124	1	EA		100-038-753	CCF-50-7502-F	MTFLM 75K .125W 5%	R165
125	1	EA	91637	100-038-104	CCF-50-1003-F	MTFLM 100K .125W 5%	R166

PARTS LIST	DESIGN ACTIVITY IDENTIFICATION AYDIN COMPUTER AND MONITOR DIVISION HORSHAM, PA. 19044	CONTRACT NO. 9412	CAGE CODE 20747	PL460-0921-501	REV AC

LIST TITLE SLC029-1	SUBCONTRACT NO.		SHEET NO. 6

FIND NO	QTY REQ	U/M	CAGE CODE	DOCUMENT NUMBER	PART OR IDENTIFYING NUMBER	NOMENCLATURE OR DESCRIPTION	NOTES
126	1	EA	91637	100-038-242	CCF-50-2401-F	MTFLM 2.4K .125W 5%	R170
127	1	EA	91637	100-038-271	CCF-50-2700-F	MTFLM 270 OHM.125W 5%	R224
128	1	EA		100-038-431	CCF-50-4300-F	MTFLM 430 OHM.125W 5%	R225
129	1	EA	91637	100-038-621	CCF-50-6200-F	MTFLM 620 OHM.125W 5%	R216
130	1	EA		100-038-911	CCF-50-9100-F	MTFLM 910 OHM.125W 5%	R214
159	2	EA	04713	103-019-001	2N2222	TRANS SIL NPN TO-18	Q1 Q29
160	1	EA	81349	103-314-004	JAN2N2907	TRANS SIL PNP TO-18	Q2
161	26	EA	04713	103-304-001	2N4126	TRANS SIL PNP TO-92	Q3 Q8 Q13 Q14 Q15 Q16 Q23 Q24 Q25 Q26 Q30 Q34 Q35 Q39 Q40 Q45 Q46 Q52 Q60 Q61 Q62 Q63 Q67 Q68 Q69 Q70
165	1	EA	04713	103-311-006	MPS6523	TRANS SIL PNP TO-92	Q4
166	1	EA		103-416-006	MPS6521	TRANS SIL NPN TO-92	Q5
167	13	EA	04713	103-408-001	2N4124	TRANS SIL NPN TO-92	Q6 Q9 Q10 Q11 Q17 Q19 Q20 Q21 Q31 Q47 Q48 Q49 Q53
170	5	EA	54186	103-647-008	ITI30	XSTR DUAL PNP TO-71	Q7 Q12 Q18 Q43 Q44
172	11	EA	04713	103-350-002	2N4857	TRANS FET TO-18	Q27 Q28 Q38 Q41 Q42 Q50 Q54 Q55 Q64 Q65 Q66
175	2	EA		103-403-001	2N4265	TRANS SIL NPN TO-92	Q32 Q57
176	2	EA		103-318-001	MPS3640	TRANS SIL PNP TO-92	Q33 Q59
177	4	EA	04713	103-308-002	2N3905	TRANS SIL PNP TO-92	Q36 Q37 Q56 Q58
181	5	EA	86684	139-209-002	CA3046	TRANS ARRAY	U1 U2 U3 U4 U11
182	1	EA	01295	139-046-404	SN7404N	HEX INVERTERS 14 P	U5
183	3	EA	01295	139-046-400	SN7400N	POS NAND GATE 14P	U6 U13 U20

PARTS LIST	DESIGN ACTIVITY IDENTIFICATION: AYDIN COMPUTER AND MONITOR DIVISION, HORSHAM, PA. 19044	CONTRACT NO. 9412	CAGE CODE 20747	PL460-0921-501	REV AC

LIST TITLE	SUBCONTRACT NO.		SHEET NO.
SLC029-1			7

FIND NO	QTY REQ	U/M	CAGE CODE	DOCUMENT NUMBER	PART OR IDENTIFYING NUMBER	NOMENCLATURE OR DESCRIPTION	NOTES
184	2	EA	01295	139-046-416	SN7416N	HEX INV.BUFFER/DR 14P	U7 U12
185	4	EA	51640	139-141-001	AD741KH	OP AMP 8 PN TO99 CAN	U8 U9 U10 U14
186	4	EA	01295	139-046-474	SN7474N	DUAL D-TYPE POS 14 P	U15 U16 U17 U18
187	1	EA	01295	139-046-402	SN7402N	POS NOR GATE 14 P	U19
191	2	EA	71279	118-005-003	1604-2-05	TERMINAL TURRET SLDR	
193	3	EA	30035	121-202-005	SPCJ-200-05	TEST POINT PC GRN	TP1 TP2 TP3
194	1	EA	30035	121-202-009	SPCJ-200-01	TEST POINT PC WHT	A GND
195	1	EA	30035	121-202-010	SPCJ-200-03	TEST POINT PC BLK	D GND
199	14	EA	07047	131-013-001	10047	PAD TRANS TO 18 4 PIN	
200	9	EA	07047	131-017-001	10383 DAP	PAD IC TO5 8PIN	
205	5	EA	19080	131-049-001	RC-TO18100-2A	PAD TRANS TO18 6PIN	
209	1	FT	92194	113-001-006	00W343S26SIT	WIRE BUS 26 AWG	
210	1	FT	03890	114-001-006	6031 26 09 11	TUBING TEF 26 AWG WHT	
				AT 297-0448		ACCEPTANCE TEST PROCEDURE - SLC029-1	

ZONE	LTR	REVISIONS DESCRIPTION	DATE	APPROVED
		"B" TO "L" SEE P/L FOR ECO Nos		
	M	REVISED PER ECO #04459 JSG	9-25-79	[illegible]
	–	ADDED -503 ASSY JSG		
	N	REVISED PER ECO 14406 & 14407 WTW 4-13-87	4-21-87	[illegible]
	P	REVISED PER ECO 15297	8-20-87	[illegible]

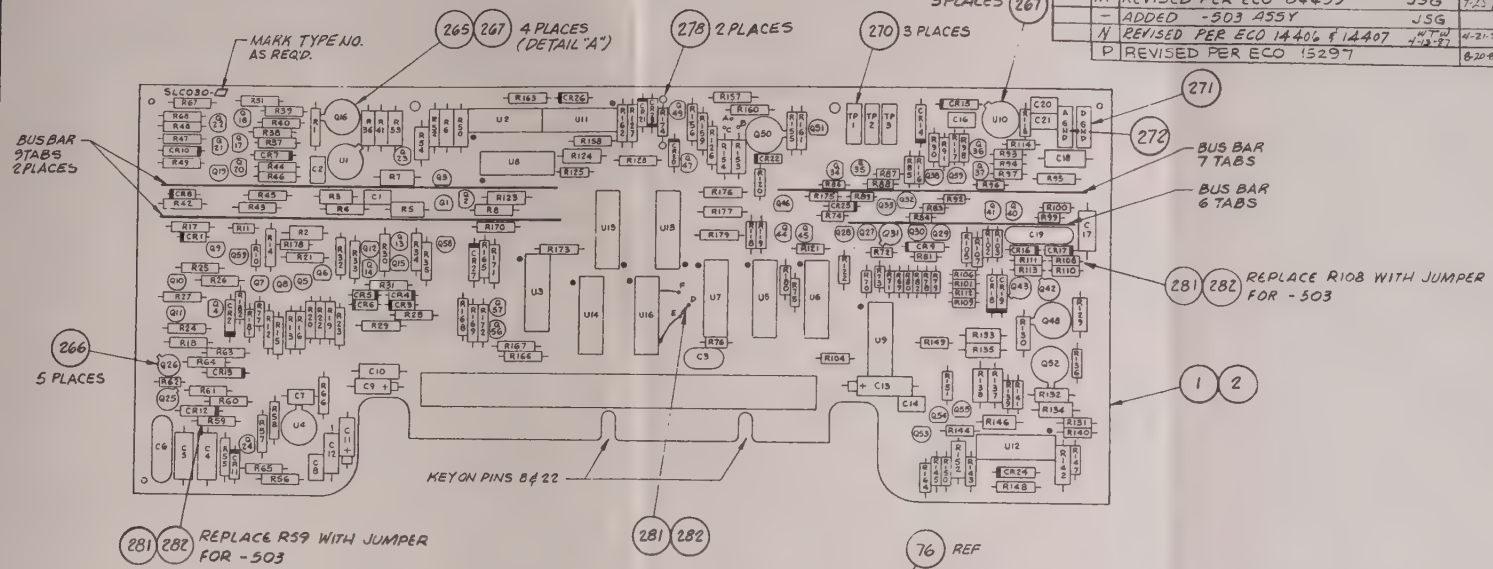

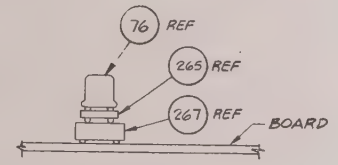

DETAIL "A"
(NO SCALE)

NOTES:-

1. FOR GENERAL ENGINEERING & MANUFACTURING NOTES SEE DWG 401-0010.

REVISION	P	N	A		
DASH NO.	501	502	503		

FOR PARTS LIST SEE PL 460-0927-□

QTY	ITEM	FSCM	MONITOR P/N	MFR P/N	DESCRIPTION	NOTES
001						

LIST OF MATERIALS

UNLESS OTHERWISE SPECIFIED DIMENSIONS ARE IN INCHES AND APPLY BEFORE FINISH
SURFACE ROUGHNESS 125√
TOLERANCE ON
FRACTIONS ± 1/64 | DECIMALS ± .XX=.02 .XXX=.005 | ANGLES ± 1/2°

MATERIAL

FINISH

DRAWN J. HARTZELL DATE 3-15-72
CHECKED J. GOODOLF 7-14-72
DRAFTING J. SAMPEDRO 12-6-72
ENGINEER R. WASSERMAN 12-6-72
MFG
APPROVED R. CLEGG 12-7-72

AYDIN MONITOR SYSTEMS
FORT WASHINGTON, PENNA. 19034

CARD ASSEMBLY
TYPE SLC030-1,-2,-3
SIGNAL LEVEL CONTROL BD#2

SIZE C | CODE IDENT NO. 20747 | 460-0927-□ | REV –
SCALE 2:1 | SHEET 1 OF 4

MONITOR SHOP STANDARDS ARE AN INTEGRAL PART OF THIS DRAWING (296-0077)

NEXT ASSY	USED ON
	9412

APPLICATION

800-0187C

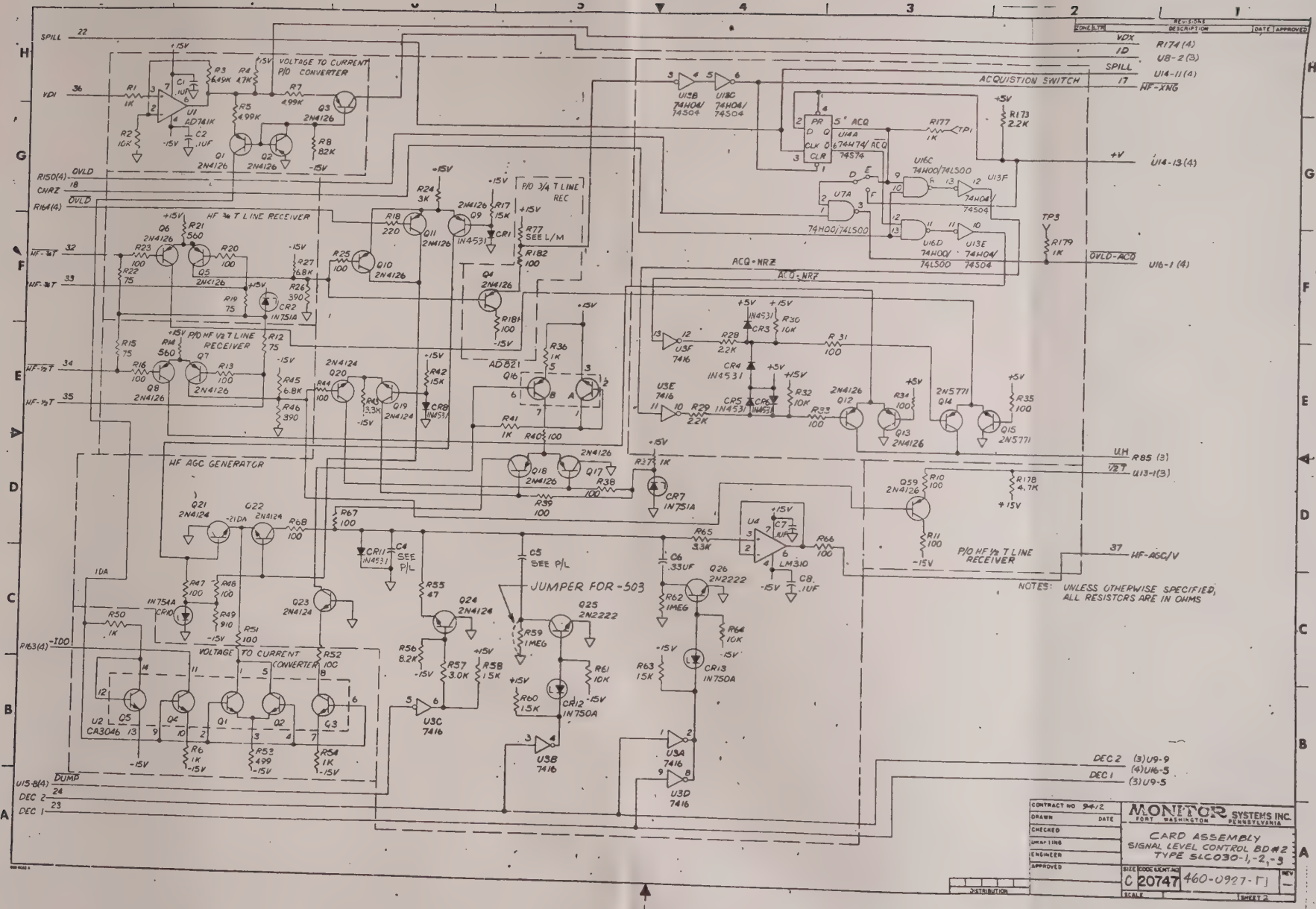
VOLTAGE TO CURRENT P/O CONVERTER
HF ¾ T LINE RECEIVER
P/O ¾ T LINE REC
P/O HF ½ T LINE RECEIVER
HF AGC GENERATOR
ACQUISITION SWITCH
VOLTAGE TO CURRENT CONVERTER
JUMPER FOR -503
P/O HF ½ T LINE RECEIVER
NOTES: UNLESS OTHERWISE SPECIFIED, ALL RESISTORS ARE IN OHMS
MONITOR SYSTEMS INC. FORT WASHINGTON PENNSYLVANIA
CARD ASSEMBLY
SIGNAL LEVEL CONTROL BD#2
TYPE SLC030-1,-2,-3
C 20747 460-0927-T1

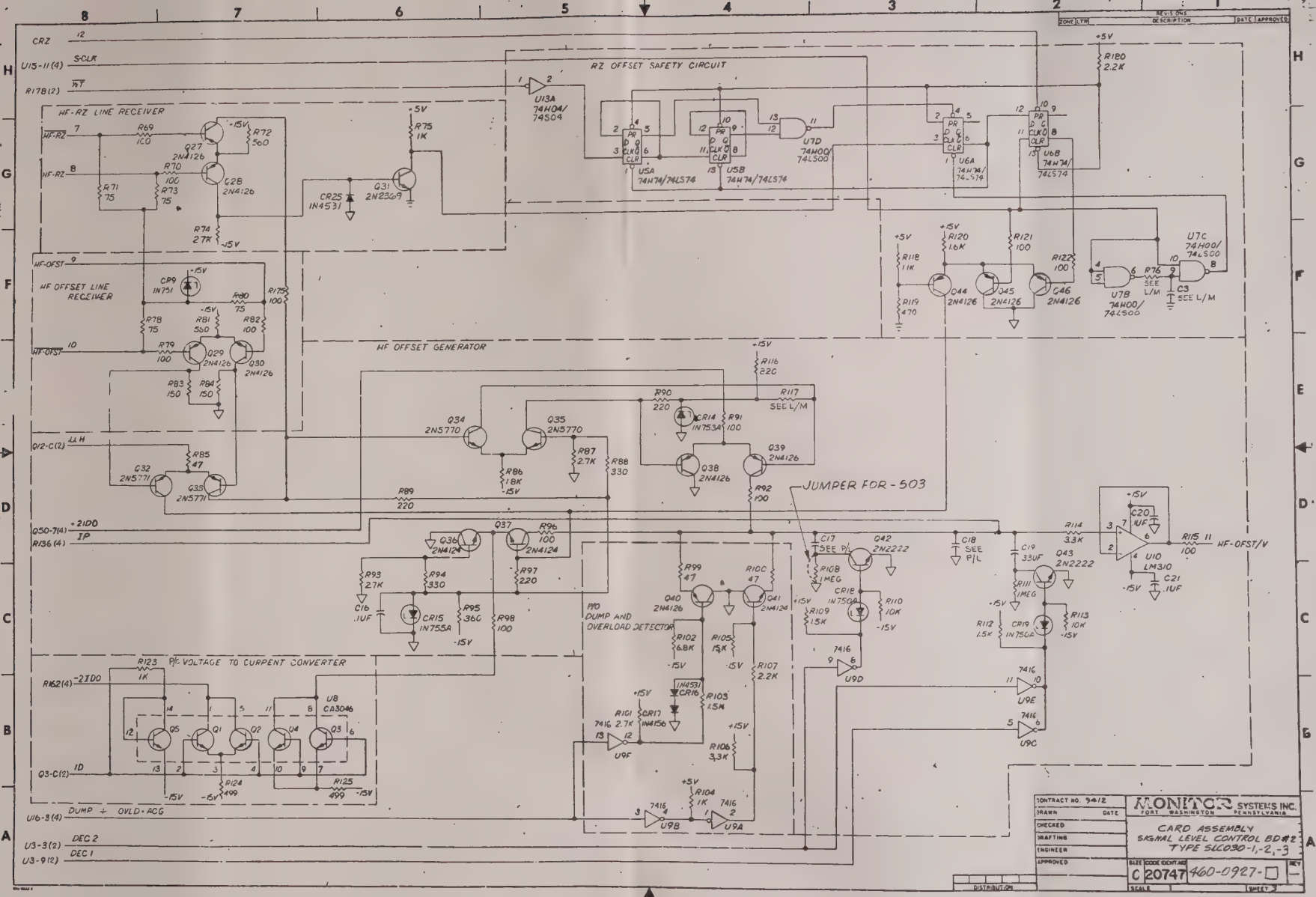
RZ OFFSET SAFETY CIRCUIT
HF-RZ LINE RECEIVER
HF OFFSET LINE RECEIVER
HF OFFSET GENERATOR
JUMPER FOR -503
P/O VOLTAGE TO CURRENT CONVERTER
P/O DUMP AND OVERLOAD DETECTOR
CRZ
U15-11(4) S-CLR
R178(2)
HF-RZ
HF-OFST
Q12-C(2) LL H
Q50-7(4) +2IDO
R136(4) IP
R162(4) -2IDO
Q3-C(2) ID
U16-3(4) DUMP + OVLD + ACG
U3-3(2) DEC 2
U3-9(2) DEC 1
HF-OFST/V
CONTRACT NO. 9412
DRAWN
CHECKED
DRAFTING
ENGINEER
APPROVED
DISTRIBUTION
MONITOR SYSTEMS INC.
FORT WASHINGTON PENNSYLVANIA
CARD ASSEMBLY
SIGNAL LEVEL CONTROL BD#2
TYPE SLC030-1,-2,-3
SIZE C
CODE IDENT NO. 20747
460-0927-
REV —
SCALE
SHEET

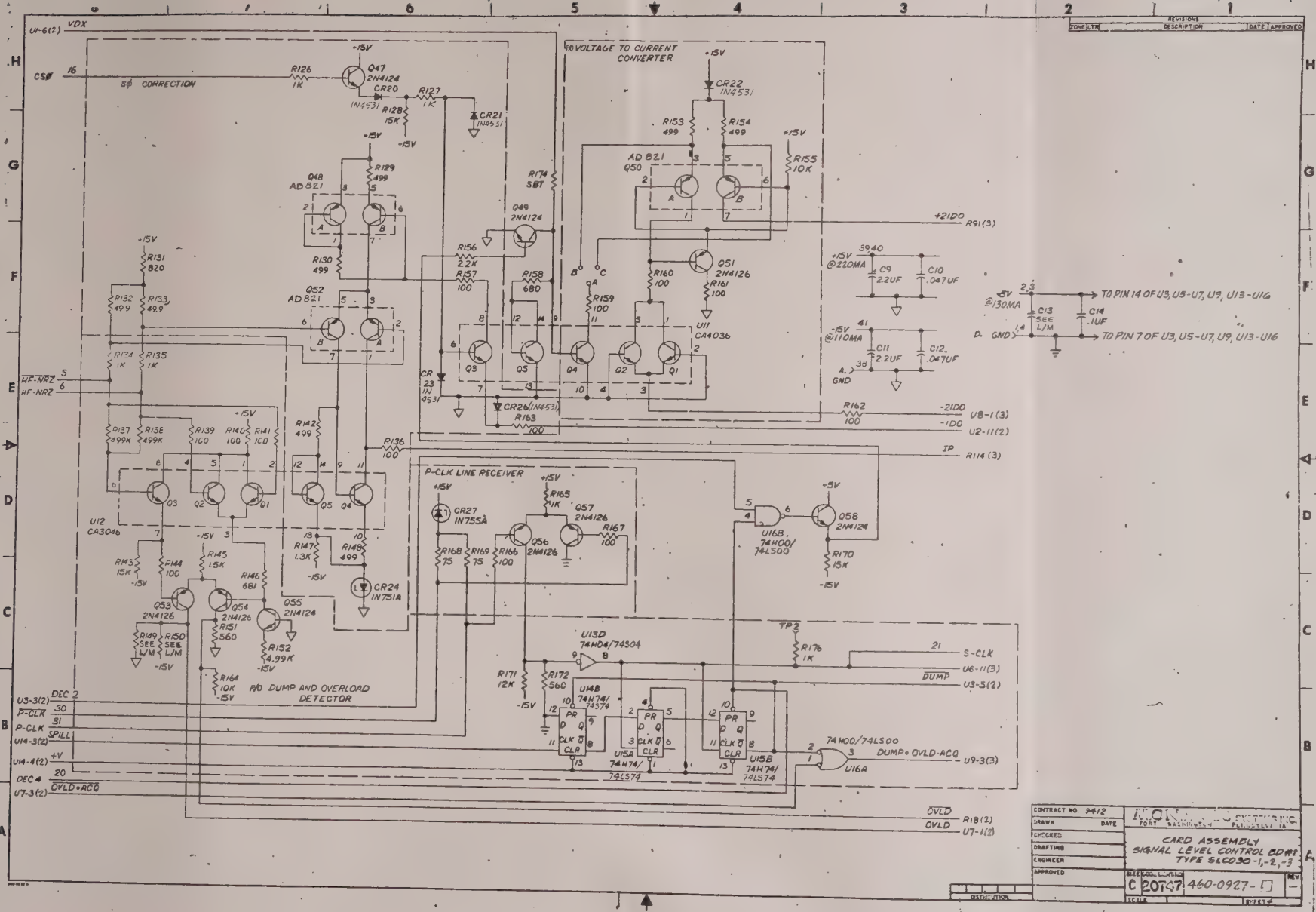
U1-6(2) VDX
CS#
3φ CORRECTION
Q47 2N4124
CR20 IN4531
CR21 IN4531
R126 1K
R127 1K
R128 15K
+15V
-15V
Q48 AD821
Q49 2N4124
Q50 AD821
Q51 2N4126
R129 499
R130 499
R131 820
R132 49.9
R133 49.9
R134 1K
R135 1K
R136 100
R137 499K
R138 499K
R139 100
R140 100
R141 100
R142 499
R143 15K
R144 100
R145 1.5K
R146 681
R147 1.3K
R148 499
R149 SEE L/M
R150 SEE L/M
R151 560
R152 4.99K
R153 499
R154 499
R155 10K
R156 2.2K
R157 100
R158 680
R159 100
R160 100
R161 100
R162 100
R163 100
R164 10K
R165 1K
R166 100
R167 100
R168 75
R169 75
R170 15K
R171 12K
R172 560
R174 SBT
R176 1K
Q1 Q2 Q3 Q4 Q5
U11 CA4036
U12 CA3046
Q53 2N4126
Q54 2N4126
Q55 2N4124
Q56 2N4126
Q57 2N4126
Q58 2N4124
CR22 IN4531
CR23 IN4531
CR24 IN751A
CR26 (IN4531)
CR27 IN755A
U13D 74HC04/74S04
U14B 74H74/74S74
U15A 74H74/74LS74
U15B 74H74/74LS74
U16A 74H00/74LS00
U16B 74H00/74LS00
VOLTAGE TO CURRENT CONVERTER
P-CLK LINE RECEIVER
P/O DUMP AND OVERLOAD DETECTOR
WF-NRZ
WF-NRZ
DEC 2
P-CLR 30
P-CLK 31
U14-3(2) SPILL
U14-4(2) +V
DEC 4
U7-3(2) OVLD•ACQ
U3-3(2)
+21DO R91(3)
-21DO U8-1(3)
-1DO U2-11(2)
IP R114(3)
S-CLK U6-11(3)
DUMP U3-5(2)
DUMP•OVLD-ACQ U9-3(3)
OVLD R18(2)
OVLD U7-1(2)
+15V @220MA
-15V @110MA
+5V @130MA
GND
C9 2.2UF
C10 .047UF
C11 2.2UF
C12 .047UF
C13 SEE L/M
C14 .1UF
TO PIN 14 OF U3, U5-U7, U9, U13-U16
TO PIN 7 OF U3, U5-U7, U9, U13-U16
REVISIONS
ZONE LTR DESCRIPTION DATE APPROVED
CONTRACT NO. 9412
DRAWN DATE
CHECKED
DRAFTING
ENGINEER
APPROVED
CARD ASSEMBLY
SIGNAL LEVEL CONTROL BD#2
TYPE SLC030-1,-2,-3
SIZE C
CAGE CODE 20747
460-0927-
REV
SCALE
SHEET 2
DISTRIBUTION

REVISIONS

REV	DESCRIPTION	EFFECTIVE ON S/N	DATE	APPROVED
B	REVISED PER ECO 460-0927B		2-6-73	F. HINKLE
C	REVISED PER ECO 460-0927C		6-27-73	F. HINKLE
D	REVISED PER ECO 460-0927D		7-15-74	B. BICKLE
E	REVISED PER ECO 00772		5-14-75	J. RONEY
F	REVISED PER ECO 00808		7-12-75	J. NEWBY
G	REVISED PER ECO 02082		7-18-77	J. MATHER
H	REVISED PER ECO 02254		4-4-78	
J	REVISED PER ECO 03341		7-21-78	R. WASSERMAN
K	REVISED PER ECO 03687 BAKER 11-6-78		11-6-78	R. WASSERMAN
L	REVISED PER ECO 04061 BAKER 4-27-79		4-30-79	D.R. McKinney
M	REVISED PER ECO 04459 JSG		9-23-79	F. HINKLE
N	REVISED PER ECO 05520 TJG 7-2-80		7-15-80	R.S. VOLZE
P	REVISED PER ECO 05868 JSG		1-6-81	R.S. VOLZE
R	REVISED PER ECO 06742 CMT 10-16-81		10-19-81	R.S. VOLZE
R1	CONVERTED TO COMPUTER PL		9-28-84	ES
T	REVISED PER ECO 13435, 13436, 13445		8-29-86	ES
U	REVISED PER ECO 14406 WTW 4-13-87		4-23-87	

NOTE 2: THE FOLLOWING NUMBERS ARE NOT USED - R9

SHEET	1	2	3	4	5	6	7	8	9	10	11	12	13	14	15	16	17	18	19	20	21	22	23
REVISION																							

AYDIN MONITOR SYSTEMS
FORT WASHINGTON, PENNA. 18034

TITLE: CARD ASSEMBLY TYPE SLC030-1 SIGNAL LEVEL CONTROL BD #2

CODE IDENT: 20747
CONTRACT NO.: 9412

DRAWN	J. HARTZELL		ENGINEER	R. WASSERMAN		DWG NO.	REV
CHECKED	J. GOODOLF		APPROVED	R. CLEGG	12-7-72	PL460-0927-501	U
DRAFTING	J. SAMPEDRO					SHEET 1 OF 7	

800-0066

PARTS LIST	DESIGN ACTIVITY IDENTIFICATION AYDIN COMPUTER AND MONITOR DIVISION HORSHAM, PA. 19044	CONTRACT NO. 9412	CAGE CODE 20747	PL460-0927-501	REV U

LIST TITLE SLC030-1	SUBCONTRACT NO.		SHEET NO. 2

FIND NO	QTY REQ	U/M	CAGE CODE	DOCUMENT NUMBER	PART OR IDENTIFYING NUMBER	NOMENCLATURE OR DESCRIPTION	NOTES
001	1	EA		400-1121	400-1121	PWB SLC030	
002	1	EA	91662	108-203-041	7022-041-000001	CONN FING BLOC 41 POS	
017	8	EA	71590	102-419-104	CK06BX104M	CAP .1UF 100V 20%	C1 C2 C7 C8 C14 C16 C20 C21
023	1	EA	09023	102-109-201	DM10201J	CAP 200PF 500V 5%	C3
029	2	EA	14752	102-001-332	230B1B332	CAP .0033UF 100V 20%	C4 C18
030	2	EA	14752	102-001-333	230B1B333	CAP .033UF 100V 20%	C5 C17
031	2	EA	84411	102-016-334	X663FR3349.5W18	CAP .33UF 50V 10%	C6 C19
032	2	EA	56289	102-305-225	150D225X0020A2	CAP 2.2UF 20V 20%	C9 C11
033	2	EA	14752	102-001-473	230B1B473	CAP .047UF 100V 20%	C10 C12
038	1	EA		102-313-685	150D685X0006A2	CAP 6.8UF 6V 20%	C13
045	14	EA	01295	104-503-014	1N4531	DIODE SIG MINIATURE	CR1 CR3 CR4 CR5 CR6 CR8 CR11 CR16 CR20 CR21 CR22 CR23 CR25 CR26
051	4	EA	04713	104-056-106	1N751A	DIODE ZENER CASE 51	CR2 CR7 CR9 CR24
054	1	EA	04713	104-056-113	1N754A	DIODE ZENER CASE 51	CR10
057	4	EA	04713	104-056-112	1N750A	DIODE ZENER CASE 51	CR12 CR13 CR18 CR19
060	1	EA	04713	104-056-105	1N753A	DIODE ZENER CASE 51	CR14
061	2	EA		104-056-110	1N755A	DIODE ZENER CASE 51	CR15 CR27
062	1	EA	12969	104-060-009	1N4156	DIODE MULTI-PELLET	CR17
067	31	EA	04713	103-304-001	2N4126	TRANS SIL PNP TO-92	Q1 Q2 Q3 Q4 Q5 Q6 Q7 Q8 Q9 Q10 Q11 Q12 Q13 Q17 Q18 Q27 Q28 Q29 Q30 Q38 Q39 Q40 Q44 Q45 Q46 Q5- Q53 Q54 Q56 Q57 Q59

PARTS LIST	DESIGN ACTIVITY IDENTIFICATION: AYDIN COMPUTER AND MONITOR DIVISION, HORSHAM, PA. 19044	CONTRACT NO. 9412	CAGE CODE 20747	PL460-0927-501	REV U

LIST TITLE: SLC030-1 | SUBCONTRACT NO. | SHEET NO. 3

FIND NO	QTY REQ	U/M	CAGE CODE	DOCUMENT NUMBER	PART OR IDENTIFYING NUMBER	NOMENCLATURE OR DESCRIPTION	NOTES
073	4	EA	07263	103-438-001	2N5771	TRANS UHS PNP TO-92	Q14 Q15 Q32 Q33
076	4	EA	54186	103-647-008	IT130	XSTR DUAL PNP TO-71	Q16 Q48 Q50 Q52
079	13	EA	04713	103-408-001	2N4124	TRANS SIL NPN TO-92	Q19 Q20 Q21 Q22 Q23 Q24 Q36 Q37 Q41 Q47 Q49 Q55 Q58
083	4	EA	04713	103-019-001	2N2222	TRANS SIL NPN TO-18	Q25 Q26 Q42 Q43
084	1	EA	04713	103-065-002	2N2369A	TRANS SIL NPN TO-18	Q31
085	2	EA	12040	103-437-001	2N5770	TRANS SIL NPN TO-92	Q34 Q35
089	8	EA	75042	100-037-102	RG1/4-1K-5%	MTFLM 1K .25W 5%	R1 R37 R126 R127 R165 R176 R177 R179
093	1	EA	81349	100-255-1002	RNC55H1002F	MTFLM 10K .1W 1%	R2
094	1	EA	81349	100-255-6491	RNC55H6491F	MTFLM 6.49K .1W 1%	R3
095	1	EA	91637	100-037-472	CCF-07-472-J	MTFLM 4.7K .25W 5%	R4
098	5	EA	81349	100-255-4991	RNC55H4991F	MTFLM 4.99K .1W 1%	R5 R7 R137 R138 R152
101	8	EA	81349	100-255-1001	RNC55H1001F	MTFLM 1K .1W 1%	R6 R36 R41 R50 R54 R123 R134 R135
105	1	EA	91637	100-037-823	CCF-07-823-J	MTFLM 82K .25W 5%	R8
111	21	EA	91637	100-038-101	CFF-50-1000-F	MTFLM 100 OHM.125W 5%	R10 R11 R69 R70 R79 R82 R91 R92 R96 R98 R115 R121 R122 R136 R139 R140 R141 R144 R175 R181 R182
117	6	EA	91637	100-037-750	CCF-07-750-J	MTFLM 75 OHM .25W 5%	R12 R15 R19 R22 R168 R169

PARTS LIST	DESIGN ACTIVITY IDENTIFICATION AYDIN COMPUTER AND MONITOR DIVISION HORSHAM, PA. 19044	CONTRACT NO. 9412	CAGE CODE 20747	PL460-0927-501

LIST TITLE SLC030-1	SUBCONTRACT NO.		SHEET NO. 4

FIND NO	QTY REQ	U/M	CAGE CODE	DOCUMENT NUMBER	PART OR IDENTIFYING NUMBER	NOMENCLATURE OR DESCRIPTION	NOTES
122	28	EA	91637	100-037-101	CCF-07-101-J	MTFLM 100 OHM .25W 5%	R13 R16 R20 R23 R25 R31 R33 R34 R35 R38 R39 R40 R44 R47 R48 R51 R52 R66 R67 R68 R157 R159 R160 R161 R162 R163 R166 R167
127	3	EA	91637	100-037-561	CCF-07-561-J	MTFLM 560 OHM .25W 5%	R14 R21 R172
128	4	EA	91637	100-037-153	CCF-07-153-J	MTFLM 15K .25W 5%	R17 R42 R128 R170
133	1	EA	91637	100-037-221	CCF-07-221-J	MTFLM 220 OHM .25W 5%	R18
134	2	EA	91637	100-037-302	CCF-07-302-J	MTFLM 3K .25W 5%	R24 R57
135	2	EA	91637	100-037-391	CCF-07-391-J	MTFLM 390 OHM .25W 5%	R26 R46
138	2	EA	91637	100-037-682	CCF-07-682-J	MTFLM 6.8K .25W 5%	R27 R45
139	4	EA	91637	100-037-222	CCF-07-222-J	MTFLM 2.2K .25W 5%	R28 R29 R156 R173
142	5	EA	91637	100-037-103	CCF-07-103-J	MTFLM 10K .25W 5%	R30 R32 R61 R64 R155
143	2	EA	91637	100-037-332	CCF-07-332-J	MTFLM 3.3K .25W 5%	R43 R65
144	1	EA	91637	100-037-911	CCF-07-911-J	MTFLM 910 OHM .25W 5%	R49
147	8	EA	81349	100-255-4990	RNC55H4990F	MTFLM 499 OHM .1W 1%	R53 R124 R129 R130 R142 R148 R153 R154
151	1	EA	91637	100-037-470	CCF-07-470-J	MTFLM 47 OHM .25W 5%	R55
152	1	EA	91637	100-037-822	CCF-07-822-J	MTFLM 8.2K .25W 5%	R56
156	3	EA	91637	100-037-152	CCF-07-152-J	MTFLM 1.5K .25W 5%	R58 R60 R63
157	1	EA	91637	100-037-105	CCF-07-105-J	MTFLM 1MEG .25W 5%	R59
158	3	EA	91637	100-038-105	CCF-50-1004-F	MTFLM 1 MEG .125W 5%	R62 R108 R111
163	4	EA		100-038-750	CCF-50-75R0-5%	MTFLM 75 OHM .125W 5%	R71 R73 R78
164	3	EA	91637	100-038-561	CCF-50-5600-F	MTFLM 560 OHM.125W 5%	R72 R81 R151

PARTS LIST	DESIGN ACTIVITY IDENTIFICATION AYDIN COMPUTER AND MONITOR DIVISION HORSHAM, PA. 19044	CONTRACT NO. 9412	CAGE CODE 20747	PL460-0927-501	REV U

LIST TITLE SLC030-1	SUBCONTRACT NO.		SHEET NO. 5

FIND NO	QTY REQ	U/M	CAGE CODE	DOCUMENT NUMBER	PART OR IDENTIFYING NUMBER	NOMENCLATURE OR DESCRIPTION	NOTES
165	4	EA	91637	100-038-272	CCF-50-2701-F	MTFLM 2.7K .125W 5%	R74 R87 R93 R101
166	2	EA	91637	100-038-102	CCF-50-1001-F	MTFLM 1K .125W 5%	R75 R104
169	1	EA		100-038-201	CCF-50-2000-F	MTFLM 200 OHM.125W 5%	R76
172	4	EA	91637	100-038-103	CCF-50-1002-F	MTFLM 10K .125W 5%	R77 R110 R113 R164
177	2	EA	91637	100-038-151	CCF-50-1500-F	MTFLM 150 OHM.125W 5%	R83 R84
178	3	EA	91637	100-038-470	CCF-50-47R0-F	MTFLM 47 OHM .125W 5%	R85 R99 R100
179	1	EA		100-038-182	CCF-50-1801-F	MTFLM 1.8K .125W 5%	R86
180	2	EA	91637	100-038-331	CCF-50-3300-F	MTFLM 330 OHM.125W 5%	R88 R94
183	3	EA		100-038-221	CFF-50-2200-F	MTFLM 220 OHM.125W 5%	R89 R90 R97
184	1	EA	91637	100-037-361	CCF-07-361-J	MTFLM 360 OHM .25W 5%	R95
185	1	EA	91637	100-038-682	CCF-50-6801-F	MTFLM 6.8K .125W 5%	R102
186	4	EA	91637	100-038-152	CCF-50-1501-F	MTFLM 1.5K .125W 5%	R103 R109 R112 R145
191	2	EA	91637	100-038-153	CCF-50-1502-F	MTFLM 15K .125W 5%	R105 R143
192	2	EA	91637	100-038-332	CCF-50-3301-F	MTFLM 3.3K .125W 5%	R106 R114
193	2	EA	91637	100-038-222	CCF-50-2201-F	MTFLM 2.2K .125W 5%	R107 R180
199	2	EA		100-038-821	CCF-50-8200-F	MTFLM 820 OHM .125W 5%	R116 R131
202	1	EA		100-038-391	CCF-50-3900-F	MTFLM 390 OHM.125W 5%	R117
206	1	EA		100-038-112	CCF-50-1101-F	MTFLM 1.1K .125W 5%	R118
207	1	EA	91637	100-038-471	CCF-4700-F	MTFLM 470 OHM.125W 5%	R119
208	1	EA		100-038-162	CCF-50-1601-F	MTFLM 1.6K .125W 5%	R120
209	1	EA	81349	100-222-4990	RN50C4990F	MTFLM 499 OHM .05W 1%	R125
214	2	EA	81349	100-255-49R9	RNC55H49R9F	MTFLM 49.9 OHM .1W 1%	R132 R133
215	1	EA	81349	100-255-6810	RNC55H6810F	MTFLM 681 OHM .1W 1%	R146

PARTS LIST	DESIGN ACTIVITY IDENTIFICATION AYDIN COMPUTER AND MONITOR DIVISION HORSHAM, PA. 19044	CONTRACT NO. 9412	CAGE CODE 20747	PL460-0927-501	REV
LIST TITLE SLC030-1		SUBCONTRACT NO.			SHEET NO. 6

FIND NO	QTY REQ	U/M	CAGE CODE	DOCUMENT NUMBER	PART OR IDENTIFYING NUMBER	NOMENCLATURE OR DESCRIPTION	NOTES
216	1	EA	91637	100-038-132	CCF-50-1301-F	MTFLM 1.3K .125W 5%	R147
221	1	EA		100-038-911	CCF-50-9100-F	MTFLM 910 OHM.125W 5%	R149
227	1	EA		100-038-113	CCF-50-1102-F	MTFLM 11K .125W 5%	R150
233	1	EA	91637	100-037-681	CCF-07-681-J	MTFLM 680 OHM .25W 5%	R158
234	1	EA	91637	100-037-123	CCF-07-123-J	MTFLM 12K .25W 5%	R171
235	1	EA	81349	100-003-SBT	RC07GF___J	RES SBT 1/4W 5%	R174
236	1	EA	91637	100-038-472	CCF-50-4701-F	MTFLM 4.7K .125W 5%	R178
243	1	EA	51640	139-141-001	AD741KH	OP AMP 8 PN TO99 CAN	U1
244	4	EA	86684	139-209-002	CA3046	TRANS ARRAY	U2 U8 U11 U12
245	2	EA	01295	139-046-416	SN7416N	HEX INV.BUFFER/DR 14P	U3 U9
246	2	EA	12040	139-144-001	LM310H	IC OP AMP 8 PIN TO-5	U4 U10
249	4	EA	01295	139-152-474	SN74S74N	DUAL-D-FFW/PRECLR 14P	U5 U6 U14 U15
253	2	EA	01295	139-152-400	SN74S00N	QUAD POS NAN 14P	U7 U16
257	1	EA	01295	139-152-404	SN74S04N	HEX INVERTER 14P	U13
265	4	EA	19080	131-049-001	RC-TO18100-2A	PAD TRANS TO18 6PIN	
266	5	EA	07047	131-013-001	10047	PAD TRANS TO 18 4 PIN	
267	7	EA	07047	131-017-001	10383 DAP	PAD IC TO5 8PIN	
270	3	EA	30035	121-202-005	SPCJ-200-05	TEST POINT PC GRN	TP1 TP2 TP3
271	1	EA	30035	121-202-010	SPCJ-200-03	TEST POINT PC BLK	DGND
272	1	EA	30035	121-202-009	SPCJ-200-01	TEST POINT PC WHT	A.GND
275	2	EA	29593	217-0312-001	B10712-T	BUS BAR (48 TAB)	
278	2	EA	71279	118-005-003	1604-2-05	TERMINAL TURRET SLDR	
281	AR	FT	92194	113-001-006	QQW343S26SIT	WIRE BUS 26 AWG	
282	AR	FT	03890	114-001-006	6031 26 09 11	TUBING TEF 26 AWG WHT	

PARTS LIST	DESIGN ACTIVITY IDENTIFICATION	CONTRACT NO.	CAGE CODE		REV
	AYDIN COMPUTER AND MONITOR DIVISION HORSHAM, PA. 19044	9412	20747	PL460-0927-501	U

LIST TITLE	SUBCONTRACT NO.		SHEET NO.
SLC030-1			7

FIND NO	QTY REQ	U/M	CAGE CODE	DOCUMENT NUMBER	PART OR IDENTIFYING NUMBER	NOMENCLATURE OR DESCRIPTION	NOTES
			AT	297-0450		ACCEPTANCE TEST PROCEDURE - SLC030-1	

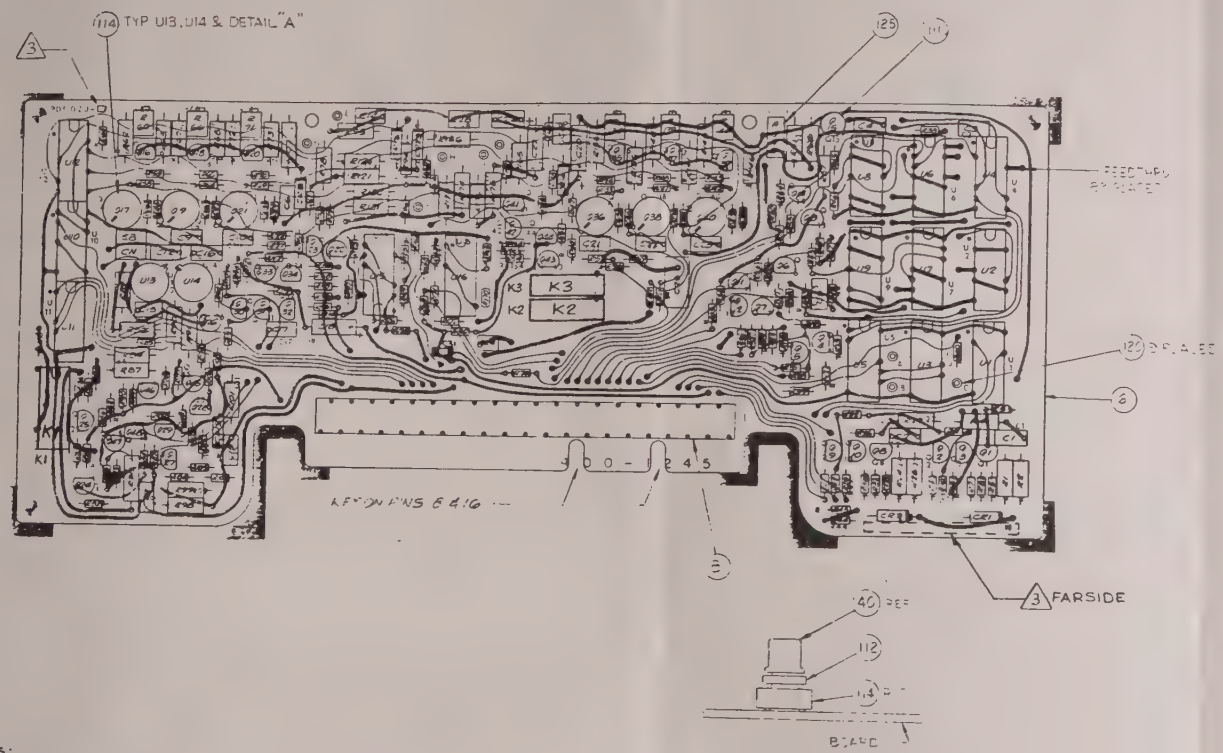

DETAIL "A"
(SCALE NONE)
TYP Q17 Q19 Q21
Q36, Q35 & Q40

NOTES:
1.- FOR GENERAL MANUFACTURING & ENGINEERING NOTES SEE DWG NO A) 285-8057
2.- MAXIMUM COMPONENT PROFILE IS .437.
3 MARK COMPLETE P/N AND LATEST REV LEVEL (20747 ASSY 460-1058-XXX REV) S/N AND DASH NO. IAW AYDIN DWG A) 289-[illegible]4.

ZONE	LTR	REVISIONS DESCRIPTION	DATE	APPROVED
	B	REVISED PER ECO 460-1058 [illegible]	[illegible]	[illegible]
	C	REVISED PER ECO 460-1058 [illegible]	[illegible]	[illegible]
	D	REVISED PER ECO 460-1058 [illegible]	[illegible]	[illegible]
	E	REVISED PER ECO 460-1058 [illegible]	[illegible]	[illegible]
	F	REVISED PER ECO 460-1058 [illegible]	[illegible]	[illegible]
	G	REVISED PER ECO 460-1058 [illegible]	[illegible]	[illegible]
	H	REVISED PER ECO 02224 [illegible]	[illegible]	[illegible]
	J	REVISED PER ECO 02249 [illegible]	[illegible]	[illegible]
	K	REVISED PER ECO 02286 [illegible]	[illegible]	[illegible]
	L	REVISED PER ECO 02254 [illegible]	[illegible]	[illegible]
	M	REVISED PER ECO 04[illegible] [illegible]	[illegible]	[illegible]
	N	REVISED PER ECO 05414 [illegible]	[illegible]	[illegible]
	N1	REVISED TO COMPLY WITH COMPUTER PL	[illegible]	[illegible]
	P	REV IAW ECO 22752 FTB	[illegible]	[illegible]

FOR SCHEMATICS SEE 460-1058 SH 2, 3, 4
FOR PARTS LIST SEE PL 460-1058-□

QTY SOI	ITEM	FSCM	MONITOR P/N	VENDOR P/N	DESCRIPTION	NOTES

LIST OF MATERIALS

DRAWN	DATE	XX AYDIN MONITOR SYSTEMS FORT WASHINGTON, PENNA. 19034
CHECKED		CARD ASSEMBLY PHASE DETECTOR PDT 020-□
DRAFTING		
ENGINEER		
MFG		
APPROVED		SIZE C · CODE IDENT NO. 20747 · 460-1058-□ · REV P
APPROVED		SCALE 4/0 NE · SHEET 1 OF 4

NEXT ASSY	USED ON
APPLICATION	

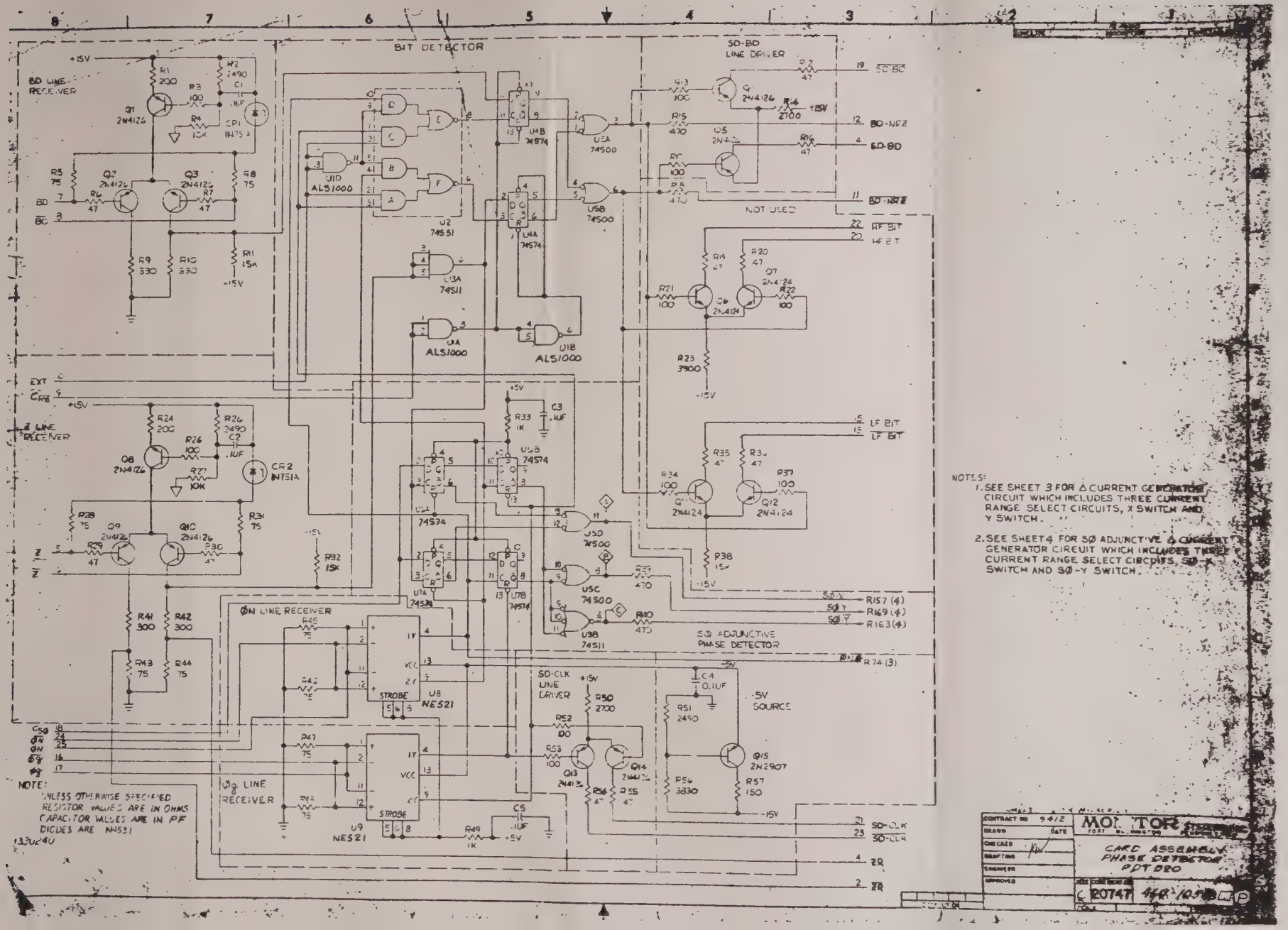
BIT DETECTOR
SD-BD LINE DRIVER
BD LINE RECEIVER
Z LINE RECEIVER
ØN LINE RECEIVER
Øg LINE RECEIVER
SD-CLK LINE DRIVER
SD ADJUNCTIVE PHASE DETECTOR
-5V SOURCE
NOT USED
NOTES:
1. SEE SHEET 3 FOR Δ CURRENT GENERATOR CIRCUIT WHICH INCLUDES THREE CURRENT RANGE SELECT CIRCUITS, X SWITCH AND Y SWITCH.
2. SEE SHEET 4 FOR SØ ADJUNCTIVE Δ CURRENT GENERATOR CIRCUIT WHICH INCLUDES THREE CURRENT RANGE SELECT CIRCUITS, SØ-X SWITCH AND SØ-Y SWITCH.
NOTE: UNLESS OTHERWISE SPECIFIED RESISTOR VALUES ARE IN OHMS CAPACITOR VALUES ARE IN PF DIODES ARE 1N5311
MOTOR
CARD ASSEMBLY PHASE DETECTOR PDT 020
20747

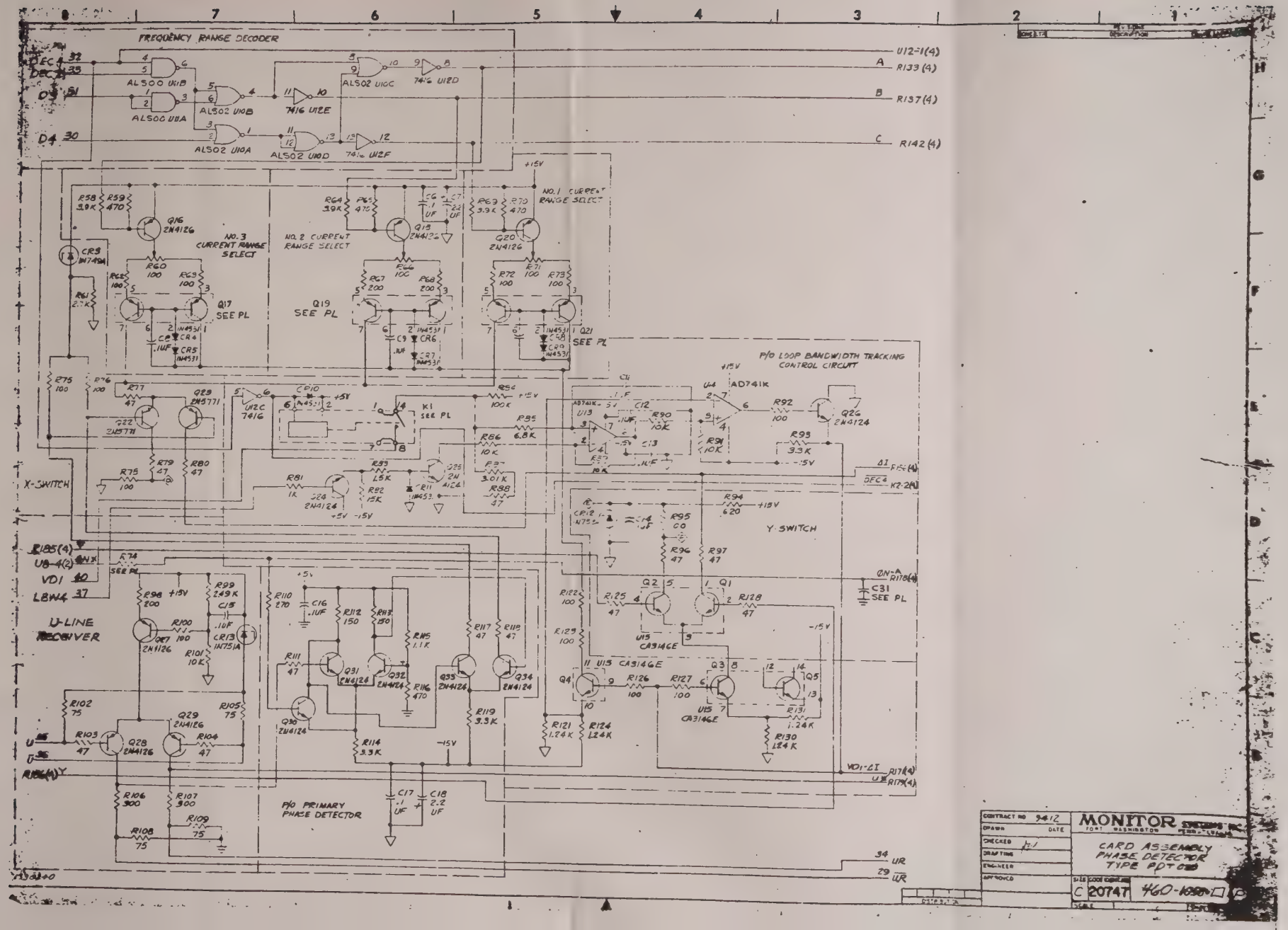
FREQUENCY RANGE DECODER
NO. 3 CURRENT RANGE SELECT
NO. 2 CURRENT RANGE SELECT
NO. 1 CURRENT RANGE SELECT
P/O LOOP BANDWIDTH TRACKING CONTROL CIRCUIT
X-SWITCH
Y-SWITCH
U-LINE RECEIVER
P/O PRIMARY PHASE DETECTOR
U12-1(4)
R133(4)
R137(4)
R142(4)
R185(4)
U8-4(2)
VD1
LBW4
CONTRACT NO 9412
MONITOR SYSTEMS INC.
FORT WASHINGTON PENNSYLVANIA
CARD ASSEMBLY PHASE DETECTOR TYPE PDT
C 20747
460-1090

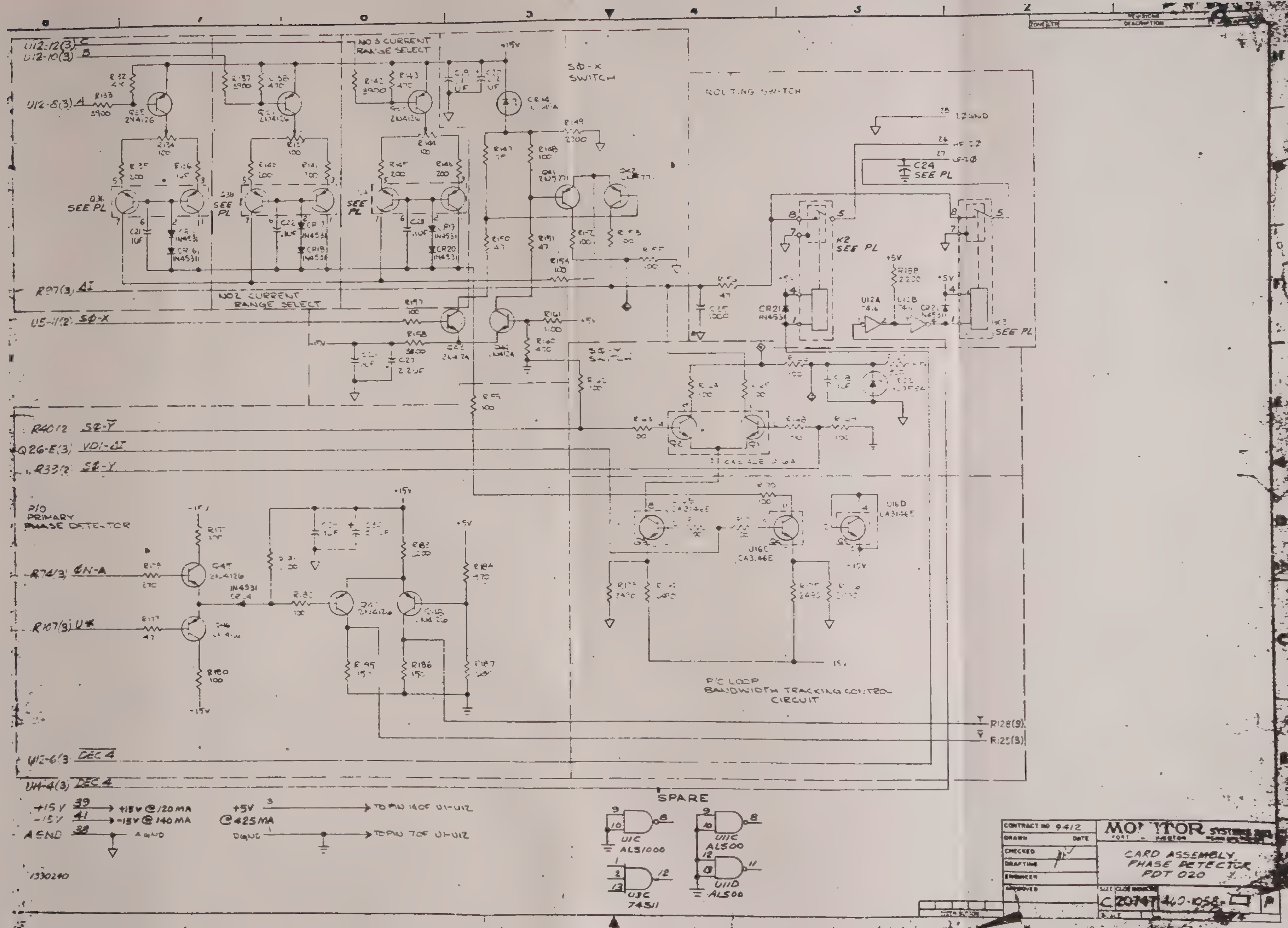
NO 3 CURRENT RANGE SELECT
SΦ-X SWITCH
ROUTING SWITCH
NO 2 CURRENT RANGE SELECT
SEE PL
K2 SEE PL
K3 SEE PL
C24 SEE PL
U12-12(3) C
U12-10(3) B
U12-8(3) A
R97(3) ΔI
U5-11(3) SΦ-X
R40(3) SΦ-Y
Q26-E(3) VDI-ΔI
R33(3) SΦ-Y
P/O PRIMARY PHASE DETECTOR
R74(3) ΦN-A
R107(3) U*
P/O LOOP BANDWIDTH TRACKING CONTROL CIRCUIT
R128(3)
R125(3)
U12-6(3) DEC 4
U11-4(3) DEC 4
+15V 39 → +15V @ 120 MA
-15V 41 → -15V @ 140 MA
AGND 38 AGND
+5V 3 → TO PIN 14 OF U1-U12
@ 425 MA
DGND 1 → TO PIN 7 OF U1-U12
SPARE
U1C ALS1000
U11C ALS00
U11D ALS00
U3C 74S11
1330240
CONTRACT NO 9412
MONITOR SYSTEMS INC.
FORT WASHINGTON
CARD ASSEMBLY PHASE DETECTOR PDT 020
C 20747 460-1058

REVISIONS

REV	DESCRIPTION	EFFECTIVE ON S/N	DATE	APPROVED
B	REVISED PER ECO 460-1058		3-1-73	F. HINKLE
C	REVISED PER ECO 460-1058 B-C		4-2-73	R. VOLZ
D	REVISED PER ECO 460-1058D		6-26-73	F. HINKLE
E	REVISED PER ECO 460-1058E		1-15-74	R. VOLZ
F	REVISED PER ECO 460-1058 F		2-15-74	B. BICKEL
G	REVISED PER ECO 460-1058		4-5-74	R. VOLZ
H	REVISED PER ECO 00224		8-7-74	R. VOLZ
J	REVISED PER ECO 00491		1-10-75	J. COAKLEY
K	REVISED PER ECO 02082		7-16-77	J. MATHER
L	REVISED PER ECO 02254		6-7-77	J. NEWBY
M	REVISED PER ECO 04220		7-3-79	F. HINKLE
N	REVISED PER ECO 05414		10-29-80	J. MATHER
P	REVISED PER ECO 05727		11-26-80	R. VOLZ
P1	CONVERTED TO COMPUTER PL		10-1-84	ES
R	REVISED PER ECOS 13435,			
—	13438, 13444, & 13445		2-16-87	R. GUNN
T	REVISED PER ECO 14221		2-16-87	J. Bay
U	REVISED PER ECO 15294		8-18-87	R.T. Gunn
V	REV IAW ECO 22752		1/17/92	R.S. Volz

SHEET	1	2	3	4	5	6	7	8	9	10	11	12	13	14	15	16	17	18	19	20	21	22	23
REVISION																							

AYDIN MONITOR SYSTEMS
FORT WASHINGTON, PENNA. 19034

TITLE PARTS LIST
PHASE DETECTOR
PDT 020-1

CODE IDENT 20747
CONTRACT NO. 9412

DRAWN	F. J. T.	2/5/73	ENGINEER	R. CLEGG	2/9/73	DWG NO. PL 460-1058-501	REV V
CHECKED	F. T. B.	2/9/73	APPROVED	R. CLEGG	2/9/73		
DRAFTING	J. SAMPERO	2/9/73	MFG	R. HELL		SHEET 1 OF 6	

800-0088

PARTS LIST	DESIGN ACTIVITY IDENTIFICATION AYDIN COMPUTER AND MONITOR DIVISION HORSHAM, PA. 19044	CONTRACT NO.	CAGE CODE 20747	PL460-1058-501	REV V

LIST TITLE PDT020-1	SUBCONTRACT NO.		SHEET NO. 2

FIND NO	QTY REQ	U/M	CAGE CODE	DOCUMENT NUMBER	PART OR IDENTIFYING NUMBER	NOMENCLATURE OR DESCRIPTION	NOTES
006	1	EA	20747	400-1245	400-1245	PWB PDT020	
008	1	EA	11769	108-203-041	7022-041-000001	CONN FING BLOC 41 POS	
012	23	EA	71590	102-419-104	CK06BX104M	CAP .1UF 100V 20%	C1 C2 C3 C4 C5 C6 C8 C9 C10 C11 C12 C13 C14 C15 C16 C17 C19 C21 C22 C23 C26 C28 C29
014	5	EA	56289	102-305-225	150D225X0020A2	CAP 2.2UF 20V 20%	C7 C18 C20 C27 C30
016	1	EA	84171	102-101-102	DM15102J	MICA 1000 PF 100V 5%	C25
022	3	EA	04713	104-056-106	1N751A	DIODE ZENER CASE 51	CR1 CR2 CR13
023	2	EA		104-056-102	1N749A	DIODE ZENER CASE 51	CR3 CR14
024	17	EA	01295	104-503-014	1N4531	DIODE SIG MINIATURE	CR4 CR5 CR6 CR7 CR8 CR9 CR10 CR11 CR15 CR16 CR17 CR18 CR19 CR20 CR21 CR22 CR24
025	2	EA	04713	104-056-105	1N753A	DIODE ZENER CASE 51	CR12 CR23
030	1	EA	94696	106-058-020	W171DIP-2	RELAY REED SPST 5V	K1
031	2	EA	71707	106-076-003	2204-05-210	RELAY REED SPST 5V SHIELDED	K2 K3
034	23	EA	04713	103-304-001	2N4126	TRANS SIL PNP TO-92	Q1 Q2 Q3 Q4 Q5 Q8 Q9 Q10 Q13 Q14 Q16 Q18 Q20 Q27 Q28 Q29 Q35 Q37 Q39 Q45 Q46 Q47 Q48
037	14	EA	04713	103-408-001	2N4124	TRANS SIL NPN TO-92	Q6 Q7 Q11 Q12 Q24 Q25 Q26 Q30 Q31 Q32 Q33 Q34 Q43 Q44
039	1	EA	81349	103-314-004	JAN2N2907	TRANS SIL PNP TO-18	Q15

RTS/ST	DESIGN ACTIVITY IDENTIFICATION AYDIN COMPUTER AND MONITOR DIVISION HORSHAM, PA. 19044	CONTRACT NO.	CAGE CODE 20747	 PL460-1058-501	REV V

LIST TITLE PDT020-1	SUBCONTRACT NO.		SHEET NO. 3

ND/O	QTY REQ	U/M	CAGE CODE	DOCUMENT NUMBER	PART OR IDENTIFYING NUMBER	NOMENCLATURE OR DESCRIPTION	NOTES
40	6	EA	54186	103-647-008	IT130	XSTR DUAL PNP TO-71	Q17 Q19 Q21 Q36 Q38 Q40
41	4	EA	07263	103-438-001	2N5771	TRANS UHS PNP TO-92	Q22 Q23 Q41 Q42
47	10	EA	81349	100-255-2000	RNC55H2000F	MTFLM 200 OHM .1W 1%	R1 R24 R67 R68 R98 R135 R140 R141 R145 R146
49	4	EA	81349	100-215-2491	100-215-2491	MTFLM 2.49K .125W 1%	R2 R25 R51 R99
50	36	EA	91637	100-038-101	CFF-50-1000-F	MTFLM 100 OHM.125W 5%	R3 R13 R17 R21 R22 R26 R34 R37 R52 R53 R75 R76 R92 R100 R122 R123 R126 R127 R148 R152 R153 R154 R157 R159 R162 R163 R164 R165 R168 R169 R170 R171 R172 R177 R180 R182
55	7	EA	81349	100-255-1002	RNC55H1002F	MTFLM 10K .1W 1%	R4 R27 R86 R89 R90 R91 R101
56	15	EA	91637	100-038-750	CCF-50-75R0-5%	MTFLM 75 OHM .125W 5%	R5 R8 R28 R31 R43 R44 R45 R46 R47 R48 R102 R105 R108 R109 R147
58	30	EA	91637	100-038-470	CCF-50-47R0-F	MTFLM 47 OHM .125W 5%	R6 R7 R12 R16 R19 R20 R29 R30 R35 R36 R54 R55 R74 R77 R79 R80 R88 R96 R97 R103 R104 R111 R117 R118 R125 R128 R150 R151 R156 R179
62	2	EA	91637	100-038-331	CCF-50-3300-F	MTFLM 330 OHM.125W 5%	R9 R10
63	4	EA	91637	100-038-153	CCF-50-1502-F	MTFLM 15K .125W 5%	R11 R32 R38 R82

RTS/ ST	DESIGN ACTIVITY IDENTIFICATION AYDIN COMPUTER AND MONITOR DIVISION HORSHAM, PA. 19044	CONTRACT NO.	CAGE CODE 20747	PL460-1058-501	REV V

LIST TITLE PDT020-1	SUBCONTRACT NO.		SHEET NO. 5

IND/ IO	QTY/ REQ	U/M	CAGE CODE	DOCUMENT NUMBER	PART OR IDENTIFYING NUMBER	NOMENCLATURE OR DESCRIPTION	NOTES
084	1	EA	20747	100-021-003	100-021-003	RES 1.24K .1% SET (4)	R121 R124 R130 R131
085	1	EA	81349	100-255-1650	RNC55H1650F	MTFLM 165 OHM .1W 1%	R136
086	1	EA	91637	100-038-821	CCF-50-8200-F	MTFLM 820 OHM .125W 5%	R167
087	1	EA	20747	100-021-004	100-021-004	RES 2.49K .1% SET (4)	R173 R176 R174 R175
088	2	EA	91637	100-038-222	CCF-50-2201-F	MTFLM 2.2K .125W 5%	R183 R188
089	1	EA	91637	100-038-681	CCF-50-6800-F	MTFLM 680 OHM.125W 5%	R187
097	1	EA	01295	139-658-1000	SN74ALS1000AN	QUAD 2-INPUT POS-NAND BUF 14PN	U1
098	1	EA	01295	139-152-451	SN74S51N	AND-OR-INV GATE 14P	U2
099	1	EA	01295	139-152-411	SN74S11N	3 IN POS AND 14P	U3
100	3	EA	01295	139-152-474	SN74S74N	DUAL-D-FFW/PRECLR 14P	U4 U6 U7
101	1	EA	01295	139-152-400	SN74S00N	QUAD POS NAN 14P	U5
102	2	EA	18324	139-232-001	NE521N	IC VOLT COMP 14 PIN	U8 U9
103	1	EA	01295	139-658-402	SN74ALS02N	QUAD 2IN NOR 14P	U10
104	1	EA	01295	139-658-400	SN74ALS00AN	IC ADV LOW PWR	U11
105	1	EA	01295	139-046-416	SN7416N	HEX INV.BUFFER/DR 14P	U12
106	2	EA	51640	139-141-001	AD741KH	OP AMP 8 PN TO99 CAN	U13 U14
107	2	EA	86684	139-209-013	CA3146E	TRANS/DIODE ARRAY	U15 U16
111	1	EA	07047	131-013-001	10047	PAD TRANS TO 18 4 PIN	
112	6	EA	19080	131-049-001	RC-TO18100-2A	PAD TRANS TO18 6PIN	
114	8	EA	07047	131-017-001	10383 DAP	PAD IC TO5 8PIN	
120	9	EA	71279	118-005-003	1604-2-05	TERMINAL TURRET SLDR	A B C D E F G H J
125	1	EA	30035	121-202-010	SPCJ-200-03	TEST POINT PC BLK	A GND

PARTS LIST	DESIGN ACTIVITY IDENTIFICATION AYDIN COMPUTER AND MONITOR DIVISION HORSHAM, PA. 19044	CONTRACT NO.	CAGE CODE 20747	PL460-1058-501	REV V

LIST TITLE	SUBCONTRACT NO.	SHEET NO.
PDT020-1		6

FIND NO	QTY REQ	U/M	CAGE CODE	DOCUMENT NUMBER	PART OR IDENTIFYING NUMBER	NOMENCLATURE OR DESCRIPTION	NOTES
				AT 297-0452		ACCEPTANCE TEST PROCEDURE - PTD020-1	
				AD 460-1058-501		ASSEMBLY DRAWING - PDT020-1	

REVISIONS					
ZONE	LTR	DESCRIPTION		DATE	APPROVED
		B TO H SEE P/L FOR ECO NO.			
	J	REV PER ECO 04459	JSG	9.25.79	G.HINKLE
	K	ADD -503 PER ECO 04675	JST	12.7.79	J.F.R
	L	REV PER ECO 06792		9.28.81	ES
	M	REV PER ECO 08133	WKH 12.21.82	1.5.83	R.S VOLTZ
	N	REV PER ECO 08290	JSG	4.1.83	J.NEWBY
	P	REV PER ECO 08348	WKH 4.4.83	4.2.83	J.NEWBY
	R	REV PER ECO 10730		7.19.86	J.LAYER
	R1	REDRAWN & REV PER ECO 20884		4.2.91	V.POLSKY

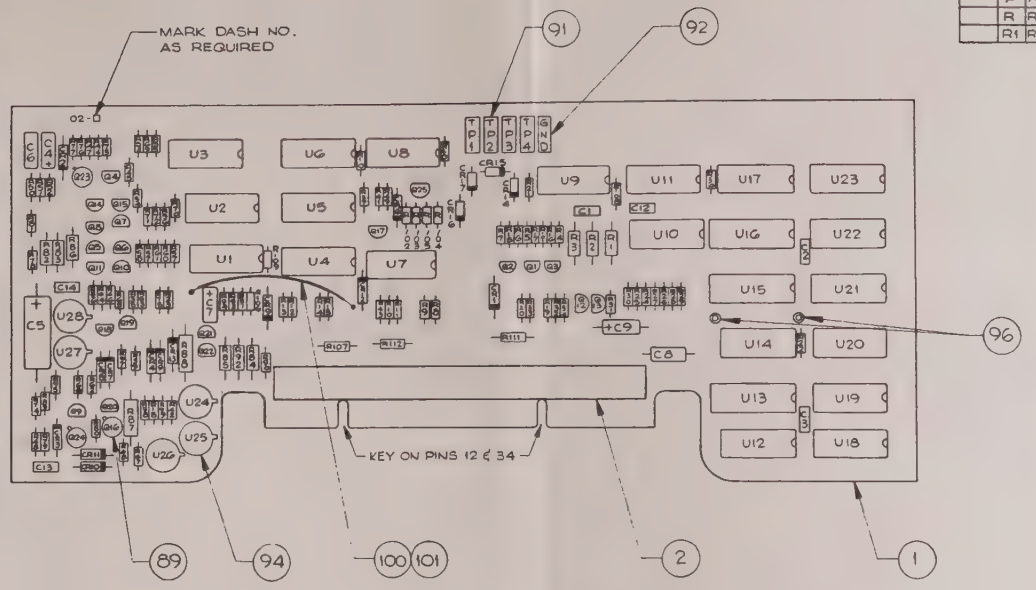

CSD 002 -1 & -2

REVISION	-R1	M	P
DASH NO.	501	502	503

NOTES :

1. FOR -502 ASSY, R28 THRU R31 ARE REPLACED WITH JUMPERS, USING ITEMS 100 & 101
2. MAXIMUM COMPONENT HEIGHT .50 INCH.

FOR SCHEMATIC SEE 600-0335-1, -2

FOR PARTS LIST SEE PL 460-1095-□

QTY	ITEM	CAGE NO.	AYDIN P/N	MFR P/N	DESCRIPTION	NOTES
001					PARTS LIST	

UNLESS OTHERWISE SPECIFIED DIMENSIONS ARE IN INCHES AND APPLY BEFORE FINISH
SURFACE ROUGHNESS 125
TOLERANCE ON FRACTIONS ± 1/64 DECIMALS ± .XX = .02 .XXX = .005 ANGLES ± 1/2°
MATERIAL
FINISH

DRAWN N.GOODMAN DATE 7.17.73
CHECKED ES
DRAFTING E.STUCKER
ENGINEER J. KOEHLER
APPROVED MFG G.L. BROWN
APPROVED QA R.CLEGG 7.23.73

AYDIN CONTROLS COMPUTER AND MONITOR DIVISION
700 DRESHER ROAD • HORSHAM, PA • 19044

CARD ASSEMBLY
TYPE CSD 002 -1, -2
COUNTDOWN LOG & SYNC DET.

SIZE	CAGE CODE		REV
C	20747	460-1095-501/502	

SCALE 2/1 SHEET 1 OF 2

AYDIN SHOP STANDARDS ARE AN INTEGRAL PART OF THIS DRAWING (295-0077)

NEXT ASSY	USED ON
	4900

APPLICATION

800-0187-E

REVISIONS			
ZONE LTR	DESCRIPTION	DATE	APPROVED

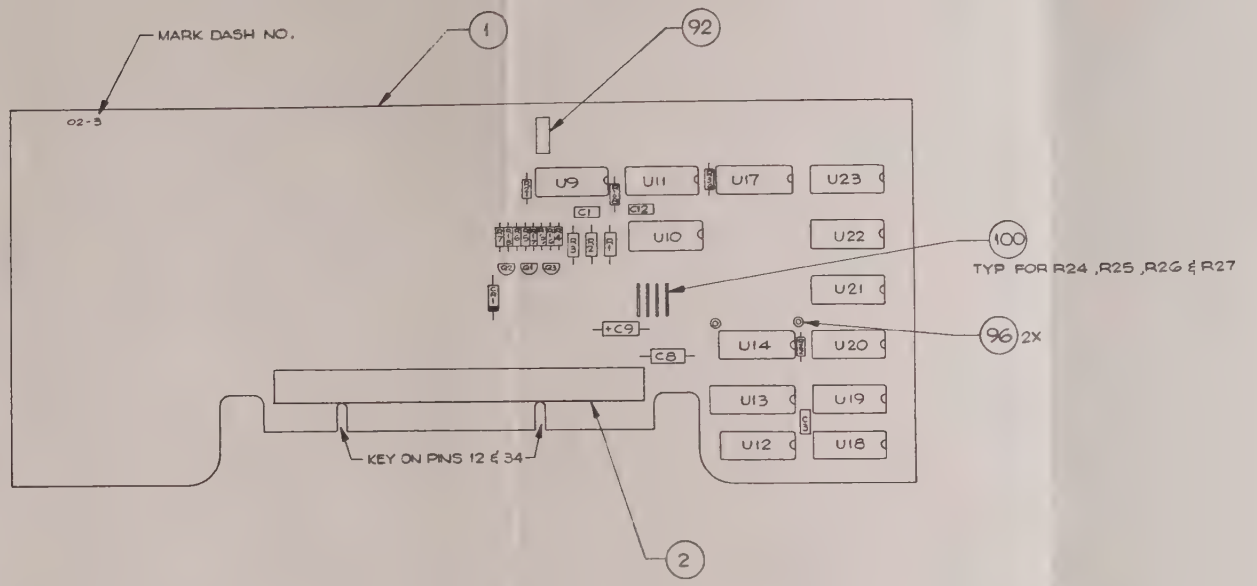

CSD002-3

FOR SCHEMATIC SEE 600-0335-3

FOR PARTS LIST SEE PL 460-1095-503

QTY	ITEM	CAGE NO.	AYDIN P/N	MFR P/N	DESCRIPTION	NOTES
001					PARTS LIST	

UNLESS OTHERWISE SPECIFIED DIMENSIONS ARE IN INCHES AND APPLY BEFORE FINISH
SURFACE ROUGHNESS 125
TOLERANCE ON FRACTIONS ± 1/64 | DECIMALS ± XX = .02, XXX = .005 | ANGLES ± 1/2°

MATERIAL

FINISH

AYDIN SHOP STANDARDS ARE AN INTEGRAL PART OF THIS DRAWING (796-0077)

NEXT ASSY	USED ON
	4900

APPLICATION

DRAWN N.GOODMAN DATE 7-17-73
CHECKED E.S
DRAFTING E. STUCKER
ENGINEER
APPROVED MFG
APPROVED QA

AYDIN COMPUTER AND MONITOR DIVISION
700 DRESHER ROAD · HORSHAM, PA · 19044

CARD ASSEMBLY
TYPE CSD 002-3
COUNTDOWN LOG & SYNC DET

SIZE	CAGE CODE		REV
C	20747	460-1095-503	

SCALE 2/1 SHEET 2 OF 2

600-0187-E

REVISIONS

REV	DESCRIPTION	EFFECTIVE ON S/N	DATE	APPROVED
B	REVISED PER ECO 1095B		2-11-74	——
C	REVISED PER ECO 01930		1-21-77	——
D	REVISED PER ECO 02859			J. MATHER
E	REVISED PER ECO 03242		5-24-78	D. MOUAT
F	REVISED PER ECO 03292		6-21-78	R. SNEDAKER
G	REVISED PER ECO 03565		9-21-78	R.WASSERMAN
H	REVISED PER ECO 03619		10-9-78	R.WASSERMAN
J	REVISED PER ECO 04459		9-25-79	G. HINKLE
K	REVISED PER ECO 04675		12-7-79	J. F. R.
L	REVISED PER ECO 06792		9-28-81	E. STUCKER
M	REVISED PER ECO 08348		4-25-83	J.R.NEWBY
M1	ADDED REF. DOCUMENTS TO CMPTR		11-29-84	E.STUCKER
N	REVISED PER ECOs: 13 435, 13436, 13437, 13438, 13440, 13445.		8-29-86	R.T. GUNN
P	REVISED PER ECO 13839 DJC 12-30-86		12-[illegible]	[illegible]
P1	ITEM 52 : CHANGED R98 TO R96 SLH 4-23-87		4-24-[illegible]	[illegible]
R	REVISED PER ECO 16347		31 Mar 88	[illegible]
T	REVISED PER ECO 16730		7/19/88	[illegible]

NOTE 2:
139-198-490 IS PREFERRED PART
139-097-490 IS ALTERNATE PART.

NOTE 1:
R81 IS A 5BT WITH A NOMINAL VALUE OF 3.6K, 1/8 W, 5%

SHEET	1	2	3	4	5	6	7	8	9	10	11	12	13	14	15	16	17	18	19	20	21	22	23
REVISION	—	—	—	—																			

AYDIN MONITOR SYSTEMS
PORT WASHINGTON, PENNA. 19034

TITLE CARD ASSEMBLY
COUNTDOWN LOGIC & SYNC. DET.
CSD 00 2-1

CODE IDENT 20747
CONTRACT NO. 4900

DRAWN	H.GOODMAN	7-17-73	ENGINEER	J.KOEHLER		DWG NO. PL460-1095-501	REV T
CHECKED	E.STUCKER		APPROVED	R.CLEGG	7-17-73		
DRAFTING	E.STUCKER		MANUF.	G.L. BROWN	7-17-73	SHEET 1 OF 5	

800-0066

PARTS LIST	DESIGN ACTIVITY IDENTIFICATION AYDIN COMPUTER AND MONITOR DIVISION HORSHAM, PA. 19044	CONTRACT NO. 4900	CAGE CODE 20747	PL460-1095-501	RE T

LIST TITLE CSD002-1	SUBCONTRACT NO.		SHEET NO. 2

FIND NO	QTY REQ	U/M	CAGE CODE	DOCUMENT NUMBER	PART OR IDENTIFYING NUMBER	NOMENCLATURE OR DESCRIPTION	NOTES
001	1	EA		400-1254	400-1254	PWB CSD001	
002	1	EA	91662	108-203-041	7022-041-000001	CONN FING BLOC 41 POS	
005	6	EA	71590	102-419-104	CK06BX104M	CAP .1UF 100V 20%	C1 C2 C3 C12 C13 C14
006	1	EA	31433	102-369-106	T330C106M035AS	CAP 10UF 35V 20%	C4
007	1	EA	56289	102-306-107	150D107X0010R2	CAP 100UF 10V 20%	C5
008	1	EA		102-369-105	T330B105M035AS	CAP 1UF 35V 20%	C7
009	1	EA	14752	102-001-473	230B1B473	CAP .047UF 100V 20%	C8
010	1	EA		102-313-685	150D685X0006A2	CAP 6.8UF 6V 20%	C9
011	1	EA	72982	102-419-105	RPE114Z5U105M100V	CAP 1UF 100V 20%	C6
013	1	EA		104-056-111	1N752A	DIODE ZENER CASE 51	CR1
014	11	EA	03877	104-014-001	1N914	DIODE SILICON DO-7	CR2 CR3 CR4 CR CR6 CR7 CR8 CR CR10 CR11 CR1
015	1	EA		104-056-102	1N749A	DIODE ZENER CASE 51	CR13
016	4	EA	01295	104-503-014	1N4531	DIODE SIG MINIATURE	CR14 CR15 CR1 CR17
017	1	EA	01295	139-152-420	SN74S20N	DUAL 4IN POS NAND 14P	U1
018	2	EA	01295	139-152-410	SN74S10N	3 IN POS NAND 14P	U2 U3
019	2	EA	01295	139-085-107	SN75107AN	IC LINE RECVR 14 PIN	U4 U7
020	1	EA	01295	139-152-400	SN74S00N	QUAD POS NAN 14P	U5
021	1	EA	01295	139-046-404	SN7404N	HEX INVERTERS 14 P	U8
022	1	EA	01295	139-152-464	SN74S64N	4-2-3-2INANDORINV 14P	U9
023	1	EA	01295	139-152-404	SN74S04N	HEX INVERTER 14P	U10
024	1	EA	01295	139-046-197	SN74197N	PRESETABLE COUNT 14P	U11
025	5	EA	01295	139-198-490	SN74LS90N	DEC CTR 14P	U12 U18 U19 U U21

PARTS -LIST	DESIGN ACTIVITY IDENTIFICATION AYDIN COMPUTER AND MONITOR DIVISION HORSHAM, PA. 19044	CONTRACT NO. 4900	CAGE CODE 20747	PL460-1095-501	REV T

LIST TITLE CSD002-1	SUBCONTRACT NO.		SHEET NO. 3

FIND NO	QTY REQ	U/M	CAGE CODE	DOCUMENT NUMBER	PART OR IDENTIFYING NUMBER	NOMENCLATURE OR DESCRIPTION	NOTES
026	1	EA	01295	139-046-151	SN74151N	DATA SELECTOR/MUX 16P	U13
027	1	EA	01295	139-152-474	SN74S74N	DUAL-D-FFW/PRECLR 14P	U14
028	2	EA	01295	139-046-153	SN74153N	DUAL DATA SEL/MUX 16P	U15 U16
029	2	EA	01295	139-198-473	SN74LS73AN	DUAL J-K,FF/CLR 14P	U17 U22
030	2	EA	01295	139-152-411	SN74S11N	3 IN POS AND 14P	U6 U23
031	5	EA	51640	139-141-001	AD741KH	OP AMP 8 PN TO99 CAN	U24 U25 U26 U27 U28
034	1	EA	81349	100-215-1182	RN55D1182F	MTFLM 11.8K .125W 1%	R1
035	1	EA	81349	100-255-1961	RNC55H1961F	MTFLM 1.96K .1W 1%	R2
036	1	EA	81349	100-255-1210	RNC55H1210F	MTFLM 121 OHM .1W 1%	R3
037	2	EA	81349	100-255-4991	RNC55H4991F	MTFLM 4.99K .1W 1%	R83 R84
038	1	EA		100-255-2211	RNC55H2211F	MTFLM 2.21K .1W 1%	R86
039	1	EA	91637	100-037-121	CCF-07-121-J	MTFLM 120 OHM .25W 5%	R87
040	1	EA	81349	100-255-2321	RNC55H2321F	MTFLM 2.32K .1W 1%	R92
041	2	EA	91637	100-038-271	CCF-50-2700-F	MTFLM 270 OHM.125W 5%	R4 R5
042	10	EA		100-038-750	CCF-50-75R0-5%	MTFLM 75 OHM .125W 5%	R6 R7 R8 R9 R10 R11 R12 R13 R14 R15
043	1	EA	91637	100-038-362	CCF-50-3601-F	MTFLM 3.6K .125W 5%	R81
044	1	EA	91637	100-038-153	CCF-50-1502-F	MTFLM 15K .125W 5%	R21
045	1	EA	91637	100-038-222	CCF-50-2201-F	MTFLM 2.2K .125W 5%	R22
046	8	EA	91637	100-038-471	CCF-4700-F	MTFLM 470 OHM.125W 5%	R24 R25 R26 R27 R28 R29 R30 R31
048	2	EA	91637	100-038-101	CFF-50-1000-F	MTFLM 100 OHM.125W 5%	R32 R33
049	2	EA	91637	100-038-332	CCF-50-3301-F	MTFLM 3.3K .125W 5%	R34 R35
050	1	EA	11502	100-039-221	RG1/2 220 OHM5%	MTFLM 220 OHM .5W 5%	R88
051	1	EA		100-038-221	CFF-50-2200-F	MTFLM 220 OHM.125W 5%	R102

PARTS LIST	DESIGN ACTIVITY IDENTIFICATION AYDIN COMPUTER AND MONITOR DIVISION HORSHAM, PA. 19044	CONTRACT NO. 4900	CAGE CODE 20747	PL460-1095-501	REV T

LIST TITLE CSD002-1	SUBCONTRACT NO.		SHEET NO. 4

FIND NO	QTY REQ	U/M	CAGE CODE	DOCUMENT NUMBER	PART OR IDENTIFYING NUMBER	NOMENCLATURE OR DESCRIPTION	NOTES
052	10	EA	91637	100-038-102	CCF-50-1001-F	MTFLM 1K .125W 5%	R36 R37 R39 R40 R41 R42 R43 R9E R109 R110
054	5	EA	91637	100-038-472	CCF-50-4701-F	MTFLM 4.7K .125W 5%	R44 R45 R46 R7E R103
056	3	EA	91637	100-038-473	CCF-50-4702-F	MTFLM 47K .125W 5%	R47 R48 R49
057	19	EA	91637	100-038-151	CCF-50-1500-F	MTFLM 150 OHM.125W 5%	R50 R51 R52 R53 R54 R55 R56 R57 R58 R59 R60 R61 R62 R63 R64 R65 R66 R67 R68
058	4	EA	91637	100-038-511	CCF-50-5100-F	MTFLM 510 OHM.125W 5%	R69 R70 R71 R72
060	4	EA	91637	100-038-272	CCF-50-2701-F	MTFLM 2.7K .125W 5%	R73 R74 R104 R105
062	5	EA	91637	100-038-105	CCF-50-1004-F	MTFLM 1 MEG .125W 5%	R76 R77 R78 R79 R80
064	1	EA	81349	100-255-1002	RNC55H1002F	MTFLM 10K .1W 1%	R82
065	1	EA	91637	100-038-220	CCF-50-22R0-F	MTFLM 22 OHM .125W 5%	R89

FROM 0: THE SYSTEM WILL GO DOWN ON FRIDAY MAY 25 AT 4:00 PM.

066	2	EA	91637	100-037-152	CCF-07-152-J	MTFLM 1.5K .25W 5%	R111 R112
067	2	EA	91637	100-038-104	CCF-50-1003-F	MTFLM 100K .125W 5%	R91 R93
068	1	EA	91637	100-038-331	CCF-50-3300-F	MTFLM 330 OHM.125W 5%	R94
069	1	EA	91637	100-038-103	CCF-50-1002-F	MTFLM 10K .125W 5%	R95
070	1	EA	91637	100-038-302	CCF-50-3001-F	MET FLM 3KOHM .125W 5%	R97
071	1	EA	91637	100-038-242	CCF-50-2401-F	MTFLM 2.4K .125W 5%	R98
072	1	EA		100-038-112	CCF-50-1101-F	MTFLM 1.1K .125W 5%	R99
073	1	EA		100-038-122	CCF-50-1201-F	MTFLM 1.2K .125W 5%	R100
074	1	EA	91637	100-037-151	CCF-07-151-J	MTFLM 150 OHM .25W 5%	R107
075	1	EA	81349	100-017-SBT	RC07GFSBTJ	RES SBT 1/8W 5%	R106
076	1	EA	91637	100-038-392	CMF-50-392-5%	MTFLM 3.9K .125W 5%	R90

PARTS LIST	DESIGN ACTIVITY IDENTIFICATION AYDIN COMPUTER AND MONITOR DIVISION HORSHAM, PA. 19044	CONTRACT NO. 4900	CAGE CODE 20747	PL460-1095-501	REV T

LIST TITLE CSD002-1	SUBCONTRACT NO.		SHEET NO. 5

FIND NO	QTY REQ	U/M	CAGE CODE	DOCUMENT NUMBER	PART OR IDENTIFYING NUMBER	NOMENCLATURE OR DESCRIPTION	NOTES
077	1	EA		100-038-912	CCF-50-9101-F	MTFLM 9.1K .125W 5%	R23
078	1	EA	81349	100-255-4531	RNC55H4531F	MTFLM 4.53K .1W 1%	R85
079	7	EA	91637	100-038-470	CCF-50-47R0-F	MTFLM 47 OHM .125W 5%	R16 R17 R18 R19 R20 R101 R108
082	2	EA	07263	103-438-001	2N5771	TRANS UHS PNP TO-92	Q1 Q2
083	10	EA	04713	103-304-001	2N4126	TRANS SIL PNP TO-92	Q3 Q4 Q5 Q6 Q7 Q8 Q9 Q10 Q11 Q25
084	10	EA	04713	103-408-001	2N4124	TRANS SIL NPN TO-92	Q12 Q13 Q14 Q15 Q17 Q18 Q19 Q20 Q21 Q22
086	2	EA	04713	103-350-002	2N4857	TRANS FET TO-18	Q23 Q24
087	1	EA	04713	103-019-001	2N2222	TRANS SIL NPN TO-18	Q16
089	3	EA	07047	131-013-001	10047	PAD TRANS TO 18 4 PIN	
091	4	EA	30035	121-202-005	SPCJ-200-05	TEST POINT PC GRN	TP1 TP2 TP3 TP4
092	1	EA	30035	121-202-010	SPCJ-200-03	TEST POINT PC BLK	GND
094	5	EA	07047	131-017-001	10383 DAP	PAD IC TO5 8PIN	
096	2	EA	71279	118-005-003	1604-2-05	TERMINAL TURRET SLDR	A B
100	1	FT	92194	113-001-006	QQW343S26SIT	WIRE BUS 26 AWG	
101	1	FT	03890	114-001-006	6031 26 09 11	TUBING TEF 26 AWG WHT	
				AT 297-0455		ACCEPTANCE TEST PROCEDURE - CSD002-1	
				SD 600-0335-1		SCHEMATIC DIAGRAM - CSD002-1	
				AD 460-1095-501		ASSEMBLY DRAWING - CSD002	

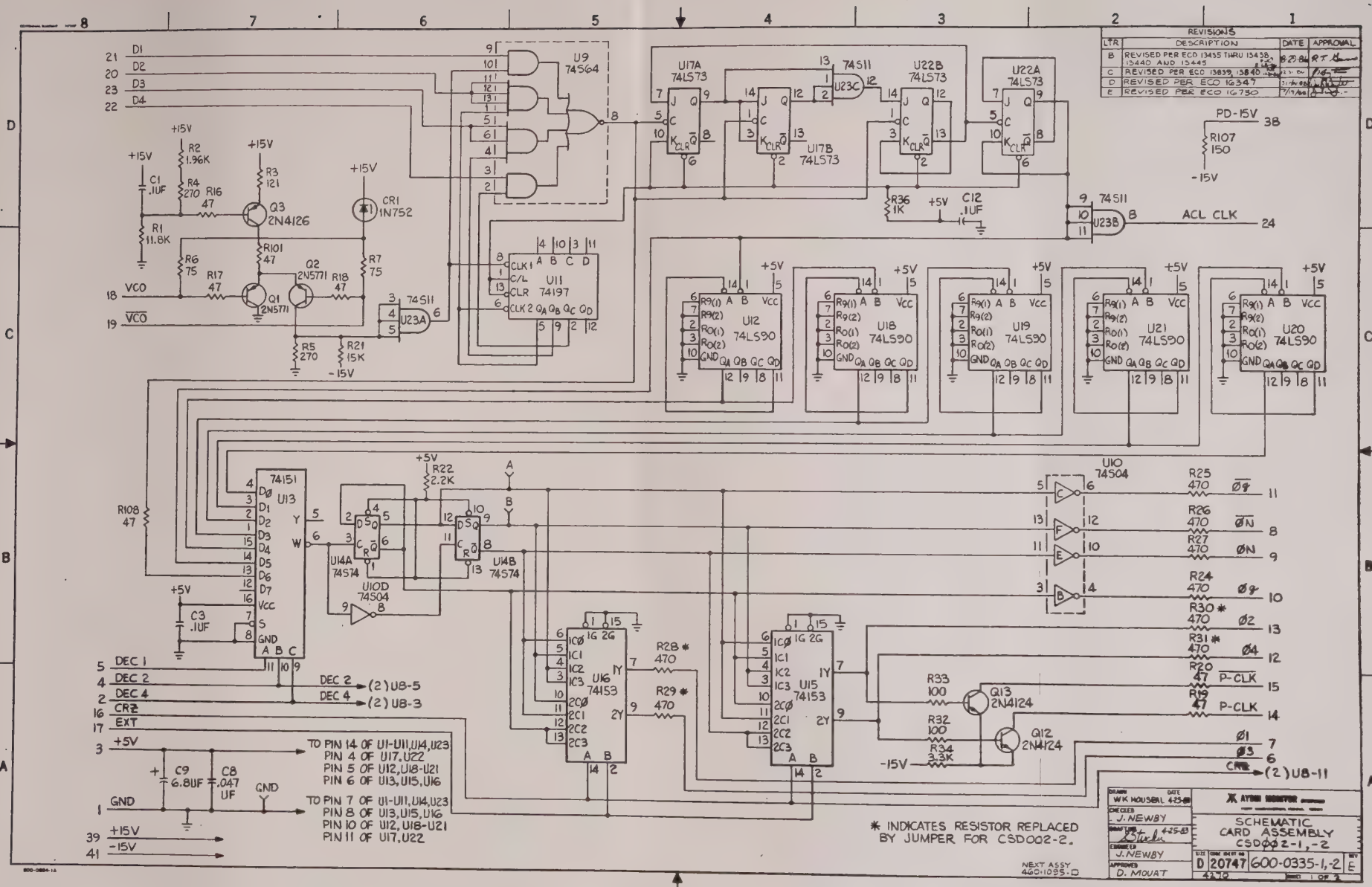
REVISIONS
LTR DESCRIPTION DATE APPROVAL
B REVISED PER ECO 13455 THRU 13458, 13440 AND 13445
C REVISED PER ECO 13839, 13840
D REVISED PER ECO 16347
E REVISED PER ECO 16730
D1
D2
D3
D4
U9 74S64
U17A 74LS73
U17B 74LS73
U22B 74LS73
U22A 74LS73
U23C 74S11
U23B 74S11
U23A 74S11
PD-15V
R107 150
-15V
ACL CLK
R36 1K
C12 .1UF
+15V
R1 11.8K
R2 1.96K
R3 121
R4 270
R16 47
R5 270
R6 75
R7 75
R17 47
R18 47
R101 47
R21 15K
Q1 2N5771
Q2 2N5771
Q3 2N4126
CR1 1N752
VCO
VCO
U11 74197
U12 74LS90
U18 74LS90
U19 74LS90
U21 74LS90
U20 74LS90
U13 74151
U14A 74S74
U14B 74S74
U10D 74S04
U10 74S04
U16 74153
U15 74153
R22 2.2K
R108 47
C3 .1UF
C9 6.8UF
C8 .047 UF
GND
DEC 1
DEC 2
DEC 4
CR2
EXT
DEC 2 (2) U8-5
DEC 4 (2) U8-3
TO PIN 14 OF U1-U11, U14, U23
PIN 4 OF U17, U22
PIN 5 OF U12, U18-U21
PIN 6 OF U13, U15, U16
TO PIN 7 OF U1-U11, U14, U23
PIN 8 OF U13, U15, U16
PIN 10 OF U12, U18-U21
PIN 11 OF U17, U22
R28 * 470
R29 * 470
R33 100
R32 100
R34 3.3K
Q13 2N4124
Q12 2N4124
R25 470 Ø4
R26 470 ØN
R27 470 ØN
R24 470 Ø4
R30 * 470 Ø2
R31 * 470 Ø4
R20 47 P-CLK
R19 47 P-CLK
Ø1
Ø3
CR2 (2) U8-11
* INDICATES RESISTOR REPLACED BY JUMPER FOR CSD002-2.
NEXT ASSY 460-1095-D
AYDIN CONTROLS
SCHEMATIC CARD ASSEMBLY CSD002-1,-2
D 20747 600-0335-1,-2 E
SHEET 1 OF 2

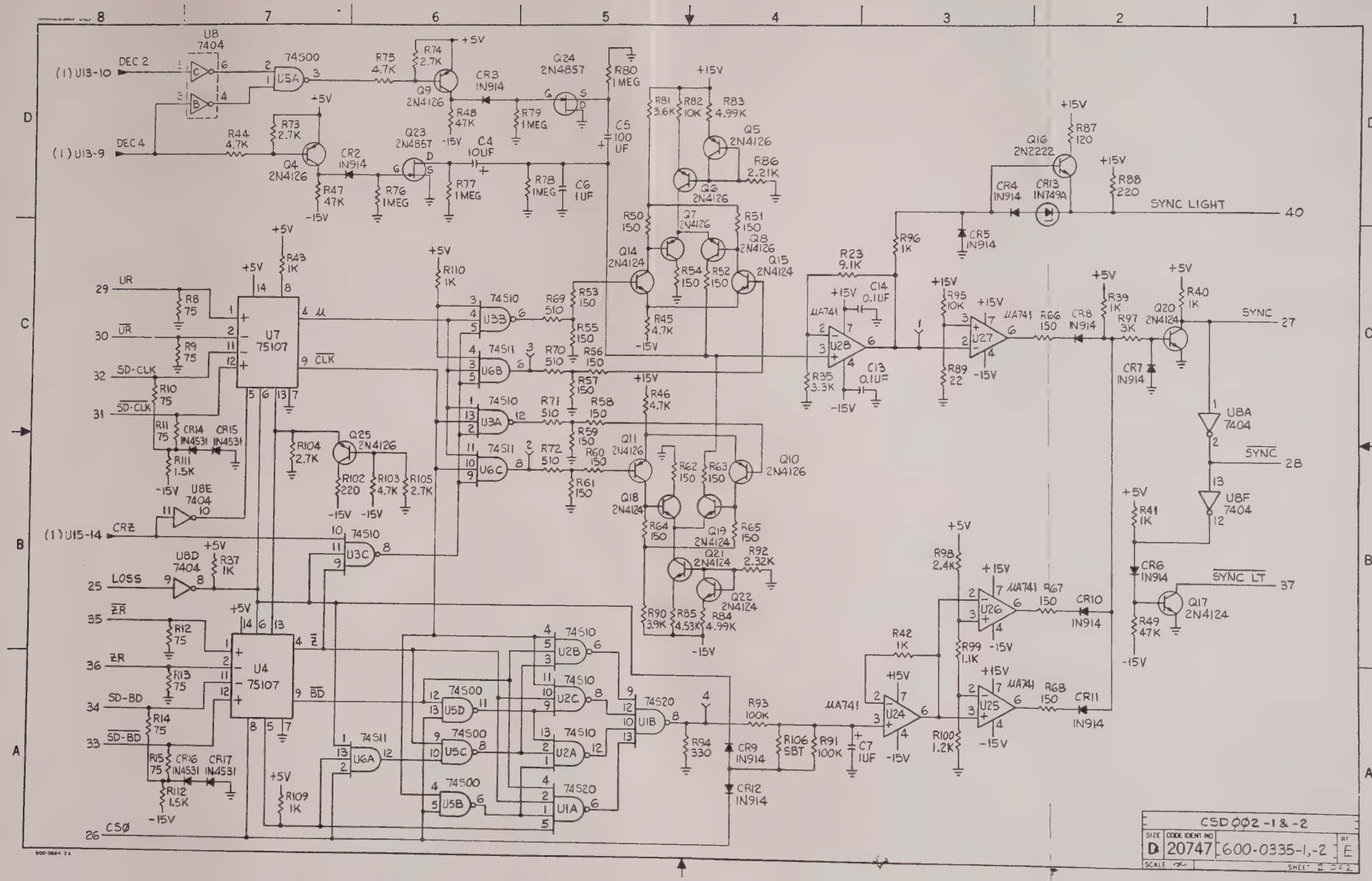

CSD002-1 & -2
SIZE D
CODE IDENT NO 20747
600-0335-1,-2
RF E
SCALE
SHEET 2 OF 2
DEC 2
DEC 4
(1) U13-10
(1) U13-9
(1) U15-14
UR
SD-CLK
CRZ
LOSS
ZR
SD-BD
CSØ
SYNC LIGHT
SYNC
SYNC LT
U7 75107
U4 75107
U8 7404
U8A 7404
U8B 7404
U8D 7404
U8E 7404
U8F 7404
74S00
74S10
74S11
74S20
Q24 2N4857
Q23 2N4857
Q16 2N2222
Q20 2N4124
Q17 2N4124
Q25 2N4126
Q21 2N4124
Q22 2N4124
Q18 2N4124
Q19 2N4124
Q10 2N4126
Q11 2N4126
Q14 2N4124
Q15 2N4124
Q9 2N4126
Q4 2N4126
Q5 2N4126
Q6 2N4126
Q7 2N4126
Q8 2N4126
CR3 1N914
CR2 1N914
CR4 1N914
CR13 1N749A
CR5 1N914
CR7 1N914
CR6 1N914
CR10 1N914
CR11 1N914
CR12 1N914
CR9 1N914
CR14 1N4531
CR15 1N4531
CR16 1N4531
CR17 1N4531
R80 1MEG
R81 3.6K
R82 10K
R83 4.99K
R86 2.21K
R87 120
R88 220
R96 1K
R23 9.1K
R35 3.3K
R95 10K
R89 22
R66 150
R39 1K
R97 3K
R40 1K
R41 1K
R49 47K
R98 2.4K
R99 1.1K
R100 1.2K
R42 1K
R67 150
R68 150
R93 100K
R106 SBT
R91 100K
R94 330
R92 2.32K
R84 4.99K
R85 4.53K
R90 3.9K
R64 150
R65 150
R62 150
R63 150
R46 4.7K
R45 4.7K
R54 150
R52 150
R50 150
R51 150
R53 150
R55 150
R56 150
R57 150
R58 150
R59 150
R60 150
R61 150
R69 510
R70 510
R71 510
R72 510
R110 1K
R109 1K
R104 2.7K
R102 220
R103 4.7K
R105 2.7K
R43 1K
R37 1K
R44 4.7K
R73 2.7K
R47 47K
R76 1MEG
R77 1MEG
R78 1MEG
R79 1MEG
R48 47K
R75 4.7K
R74 2.7K
R77 1MEG
C4 10UF
C5 100 UF
C6 1UF
C7 1UF
C13 0.1UF
C14 0.1UF

ZONE	LTR	DESCRIPTION	DATE	APPROVED
	B	REVISED PER ECO 08406		
	C	REV PER ECO 20446		R BROWN
	—	REV PER ECO 22416		R BROWN

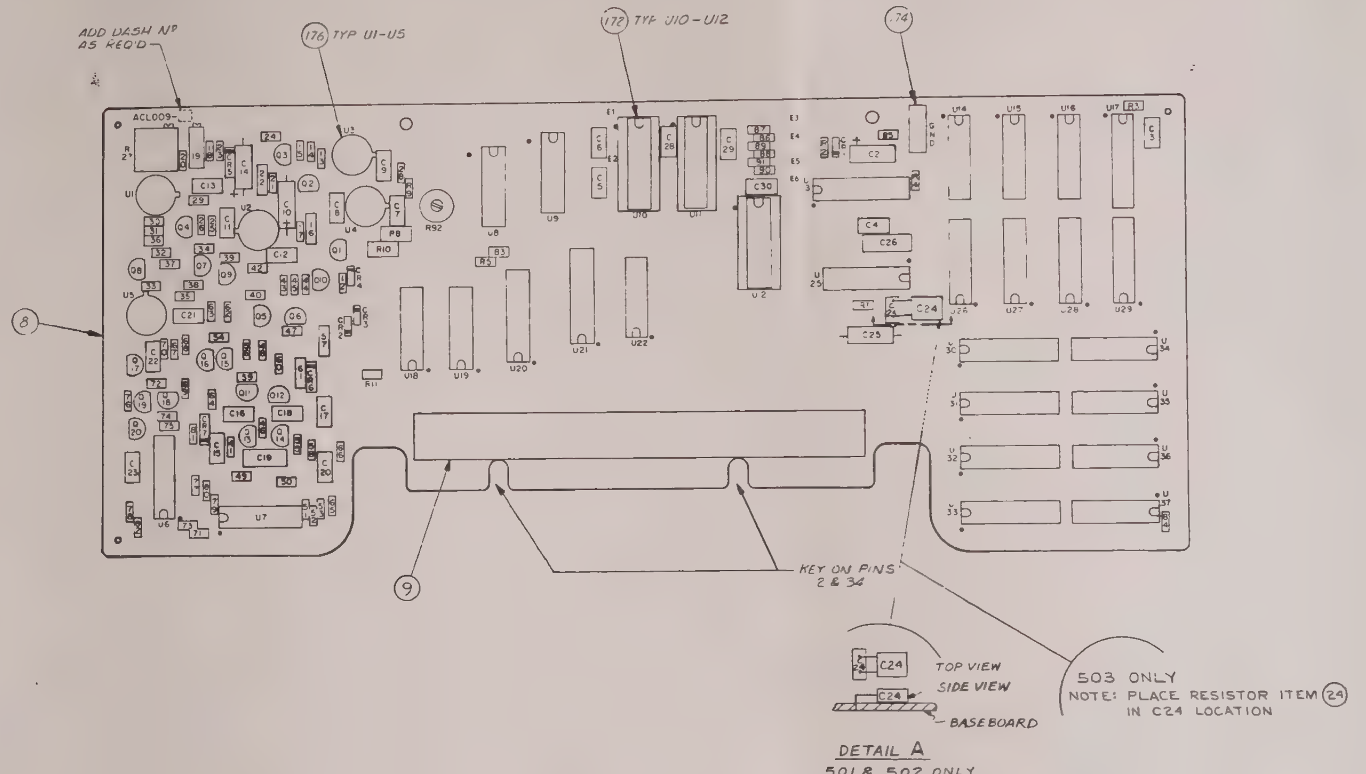

NOTES:

1. FOR GENERAL MANUFACTURING & ENGINEERING NOTES SEE DWG. Nº A)401-0010.

REVISION	C,	C	—
DASH NO.	-501	-502	-503

FOR PARTS LIST SEE PL 460-1823-□

AYDIN MONITOR SYSTEMS
PORT WASHINGTON, PENNA. 19034

CARD ASSEMBLY
AUTO CALIBRATION LOGIC
ACL009-□

DRAWN	J. S. GOODOLF	4-13-82
CHECKED		
DRAFTING		
ENGINEER		
MFG		
APPROVED		
APPROVED		

NEXT ASSY	USED ON
4972-20	
APPLICATION	

SIZE D | CODE IDENT NO. 20747 | 460-1823-□ | REV —

SCALE 2/1 | SHEET 1 OF 1

800-0884-18

REVISIONS

REV	DESCRIPTION	EFFECTIVE ON S/N	DATE	APPROVED
B	REVISE PER ECO 08406 WKH 5-2-83		10MAY83	RSVolz
C	REVISED PER ECO #08565 JSG		19AUG83	RSVolz
C1	ADDING REF. DOCUMENTS TO CMPTR		11-28-84	ES
D	REVISED PER ECO 14786		5/15/87	R.T. Gunn
E	REVISED PER ECO 15340		9/28/87	[illegible]
F	REVISED PER ECO 20446 PF		12/3/90	R BROWN

NOTES: 1. MAKE LEAD SPACING OF ITEM 14 .20
2. MAKE LEAD SPACING OF ITEM 16 .25

SHEET	1	2	3	4	5	6	7	8	9	10	11	12	13	14	15	16	17	18	19	20	21	22	23
REVISION																							

AYDIN MONITOR SYSTEMS
FORT WASHINGTON, PENNA. 19034

TITLE PARTS LIST
AUTO CALIBRATION LOGIC
TYPE ACL009-1

CODE IDENT 20747
CONTRACT NO. 4972-20

DRAWN	J.S. GOODOLF	3-26-82	ENGINEER	M. LEVY	2 AUG 82	DWG NO.	REV
CHECKED	R.L. Krotee	5 APR 82	APPROVED	[illegible]	2 AUG 82	PL460-1823-501	F
DRAFTING	[illegible]	3-2-82	MFG	[illegible]	[illegible]	SHEET 1 OF 5	

800-0068

PARTS LIST	DESIGN ACTIVITY IDENTIFICATION AYDIN COMPUTER AND MONITOR DIVISION HORSHAM, PA. 19044	CONTRACT NO. 9910	CAGE CODE 20747	PL460-1823-501	REV F
LIST TITLE ACL009-1		SUBCONTRACT NO.			SHEET NO. 2

FIND NO	QTY REQ	U/M	CAGE CODE	DOCUMENT NUMBER	PART OR IDENTIFYING NUMBER	NOMENCLATURE OR DESCRIPTION	NOTES
008	1	EA		400-1776	400-1776	PWB ACL009	
009	1	EA	91662	108-203-041	7022-041-000001	CONN FING BLOC 41 POS	
012	1	EA		102-366-003	T330D227M006AS	CAP 220UF 6V 20%	C2
014	2	EA		102-109-200	DM10200J	CAP 20PF 500V 5%	C3 C4
016	16	EA	71590	102-419-104	CK06BX104M	CAP .1UF 100V 20%	C5 C6 C7 C8 C9 C11 C12 C13 C15 C16 C17 C18 C20 C21 C22 C23
019	2	EA	56289	102-305-225	150D225X0020A2	CAP 2.2UF 20V 20%	C10 C14
021	1	EA		102-116-470	CD15ED470G03	MICA 47 PF 100V 2%	C19
024	1	EA	71590	102-432-001	CZ40C225M	CAP 2.2UF 50V 20%	C24
026	2	EA	14752	102-001-473	230B1B473	CAP .047UF 100V 20%	C25 C26
028	3	EA	71590	102-419-103	CZ15A103M	CAP .01UF 100V 20%	C28 C29 C30
033	4	EA	01295	104-503-014	1N4531	DIODE SIG MINIATURE	CR1 CR2 CR3 CR4
035	1	EA	04713	104-308-006	1N821A	DIODE ZENER SILICON	CR5
037	1	EA	04713	104-056-106	1N751A	DIODE ZENER CASE 51	CR6
039	1	EA	04713	104-056-105	1N753A	DIODE ZENER CASE 51	CR7
043	6	EA	04713	103-408-001	2N4124	TRANS SIL NPN TO-92	Q1 Q2 Q5 Q6 Q10 Q19
045	8	EA	04713	103-304-001	2N4126	TRANS SIL PNP TO-92	Q3 Q4 Q7 Q8 Q9 Q17 Q18 Q20
048	6	EA	12040	103-437-001	2N5770	TRANS SIL NPN TO-92	Q11 Q12 Q13 Q14 Q15 Q16
052	1	EA		100-038-680	CCF-50-68R0-F	MTFLM 68 OHM .125W 5%	R1
054	3	EA	91637	100-038-203	CCF-50-2002-F	MTFLM 20K .125W 5%	R2 R3 R4
056	11	EA	91637	100-038-152	CCF-50-1501-F	MTFLM 1.5K .125W 5%	R5 R11 R12 R24 R30 R31 R32 R33 R34 R35 R68
059	1	EA	91637	100-038-104	CCF-50-1003-F	MTFLM 100K .125W 5%	R13

RTS / IST	DESIGN ACTIVITY IDENTIFICATION AYDIN COMPUTER AND MONITOR DIVISION HORSHAM, PA. 19044	CONTRACT NO. 9910	CAGE CODE 20747	PL460-1823-501	REV F

LIST TITLE ACL009-1	SUBCONTRACT NO.		SHEET NO. 3

ND ID	QTY REQ	U/M	CAGE CODE	DOCUMENT NUMBER	PART OR IDENTIFYING NUMBER	NOMENCLATURE OR DESCRIPTION	NOTES
61	1	EA	20747	100-215-1273	100-215-1273	USE (100-255-1273)	R8
63	1	EA	20747	100-222-2371	100-222-2371	REPLACE W/100-046-2371	R9
65	1	EA	20747	100-215-1301	100-215-1301	USE (100-255-1301)	R10
67	3	EA	91637	100-038-331	CCF-50-3300-F	MTFLM 330 OHM.125W 5%	R14 R21 R70
69	2	EA	91637	100-038-512	CCF-50-5101-F	MTFLM 5.1K .125W 5%	R15 R17
71	2	EA	91637	100-037-471	CCF-07-471-J	MTFLM 470 OHM .25W 5%	R16 R22
73	5	EA	91637	100-038-102	CCF-50-1001-F	MTFLM 1K .125W 5%	R18 R75 R83 R84 R85
75	1	EA		101-121-307	3296X-1-102	CERMT POT 1K .5W 10%	R19
77	1	EA	20747	100-222-4531	100-222-4531	REPLACE W/100-046-4531	R20
79	1	EA	81349	100-222-4991	RN50C4991F	REPLACE W/100-046-4991	R23
81	1	EA	81349	100-222-1432	RN50C1432F	REPLACE W/100-046-1432	R25
83	1	EA	20747	100-222-6650	100-222-6650	REPLACE W/100-046-6650	R26
85	1	EA		101-101-001	3290P-1-101	WRE/WD POT 100K 1W 5%	R27
87	2	EA		100-038-912	CCF-50-9101-F	MTFLM 9.1K .125W 5%	R28 R66
89	2	EA	20747	100-222-1002	100-222-1002	REPLACE W/100-046-1002	R29 R36
91	1	EA	81349	100-222-2002	RN50C2002F	RES 20K 1/20W 1%	R37
93	1	EA	20747	100-222-4022	100-222-4022	REPLACE W/100-046-4022	R38
95	1	EA	81349	100-017-SBT	RC07GFSBTJ	RES SBT 1/8W 5%	R39
97	13	EA	91637	100-038-101	CFF-50-1000-F	MTFLM 100 OHM.125W 5%	R40 R42 R47 R48 R49 R50 R53 R54 R59 R72 R76 R79 R80
01	2	EA		100-038-681	CCF-50-6800-F	MTFLM 680 OHM.125W 5%	R41 R58
03	2	EA	91637	100-038-272	CCF-50-2701-F	MTFLM 2.7K .125W 5%	R43 R45
05	1	EA	91637	100-038-103	CCF-50-1002-F	MTFLM 10K .125W 5%	R44
07	2	EA	20747	100-222-1210	100-222-1210	REPLACE W/100-046-1210	R46 R55

PARTS LIST	DESIGN ACTIVITY IDENTIFICATION AYDIN COMPUTER AND MONITOR DIVISION HORSHAM, PA. 19044	CONTRACT NO. 9910	CAGE CODE 20747	PL460-1823-501	REV F

LIST TITLE ACL009-1	SUBCONTRACT NO.	SHEET NO. 4

FIND NO	QTY REQ	U/M	CAGE CODE	DOCUMENT NUMBER	PART OR IDENTIFYING NUMBER	NOMENCLATURE OR DESCRIPTION	NOTES
109	7	EA	20747	100-222-1000	100-222-1000	REPLACE W/100-046-1000	R51 R52 R56 R60 R71 R73 R77
112	1	EA	91637	100-037-182	CCF-07-182-J	MTFLM 1.8K .25W 5%	R57
114	1	EA	91637	100-037-561	CCF-07-561-J	MTFLM 560 OHM .25W 5%	R61
116	2	EA	91637	100-038-470	CCF-50-47R0-F	MTFLM 47 OHM .125W 5%	R62 R63
118	1	EA	91637	100-038-471	CCF-4700-F	MTFLM 470 OHM.125W 5%	R64
120	1	EA	91637	100-038-222	CCF-50-2201-F	MTFLM 2.2K .125W 5%	R65
122	1	EA	20747	100-222-1211	100-222-1211	REPLACE W/100-046-1211	R67
124	3	EA	81349	100-222-3011	RN50C3011F	REPLACE W/100-046-3011	R69 R88 R90
126	2	EA		100-038-750	CCF-50-75R0-5%	MTFLM 75 OHM .125W 5%	R78 R82
128	2	EA	20747	100-222-2001	100-222-2001	REPLACE W/100-046-2001	R74 R81
130	2	EA	80031	100-222-8871	MF3C	REPLACE W/100-046-8871	R86 R87
133	2	EA	81349	100-222-3091	RN50C3091F	REPLACE W/100-046-3091	R89 R91
134	1	EA	32997	101-156-501	3339P-1-501	CERMT RND 500 .5W 10%	R92
139	5	EA	51640	139-141-001	AD741KH	OP AMP 8 PN TO99 CAN	U1 U2 U3 U4 U5
141	2	EA	86684	139-209-002	CA3046	TRANS ARRAY	U6 U7
143	2	EA	01295	139-198-427	SN74LS27N	3 INPT POS NOR 14PIN	U8 U19
145	1	EA	01295	139-046-416	SN7416N	HEX INV.BUFFER/DR 14P	U9
147	1	EA	06665	139-593-002	DAC-08EP	8 BIT D/A CONV	U10
149	2	EA	06665	139-594-002	DAC-20CP	2 DIG BCD D/A CONV	U11 U12
151	2	EA	01295	139-198-123	SN74LS123N	DUAL MULTVIB W/CLR16P	U13 U17
153	1	EA	01295	139-198-410	SN74LS10N	3IN PNAND 14P	U14
155	5	EA	01295	139-198-490	SN74LS90N	DEC CTR 14P	U15 U34 U35 U36 U37
157	1	EA	01295	139-198-421	SN74LS21N	DUAL 4IN PAND 14P	U16
159	1	EA	01295	139-198-402	SN74LS02N	QUAD 2INPT POS NOR 14PIN	U18

ARTS LIST	DESIGN ACTIVITY IDENTIFICATION AYDIN COMPUTER AND MONITOR DIVISION HORSHAM, PA. 19044	CONTRACT NO. 9910	CAGE CODE 20747	PL460-1823-501	REV F

LIST TITLE ACL009-1	SUBCONTRACT NO.	SHEET NO. 5

IND NO	QTY REQ	U/M	CAGE CODE	DOCUMENT NUMBER	PART OR IDENTIFYING NUMBER	NOMENCLATURE OR DESCRIPTION	NOTES
161	2	EA	01295	139-198-191	SN74LS191N	UP/DWN CTR BIN 16P	U20 U21
163	3	EA	01295	139-198-404	SN74LS04N	HEX INVERTER 14P	U22 U25 U28
165	2	EA	01295	139-198-400	SN74LS00N	QUAD 2IN NAND 14P	U26 U27
167	1	EA	01295	139-198-474	SN74LS74AN	DUAL FF/PR/CLR 14P	U29
169	4	EA	01295	139-198-485	SN74LS85N	4BIT MAG COM 16P	U30 U31 U32 U33
172	3	EA	55322	108-935-003	ICO-316-SGT	SCKT DIP 16 PN .3CTR	
174	1	EA	30035	121-202-010	SPCJ-200-03	TEST POINT PC BLK	D. GND
176	5	EA	07047	131-017-001	10383 DAP	PAD IC TO5 8PIN	
				SD 600-0311		SCHEMATIC DIAGRAM - ACL009-1	
				AT 297-0780		ACCEPTANCE TEST PROCEDURE - ACL009	
				AD 460-1823-501		ASSEMBLY DRAWING - ACL009	

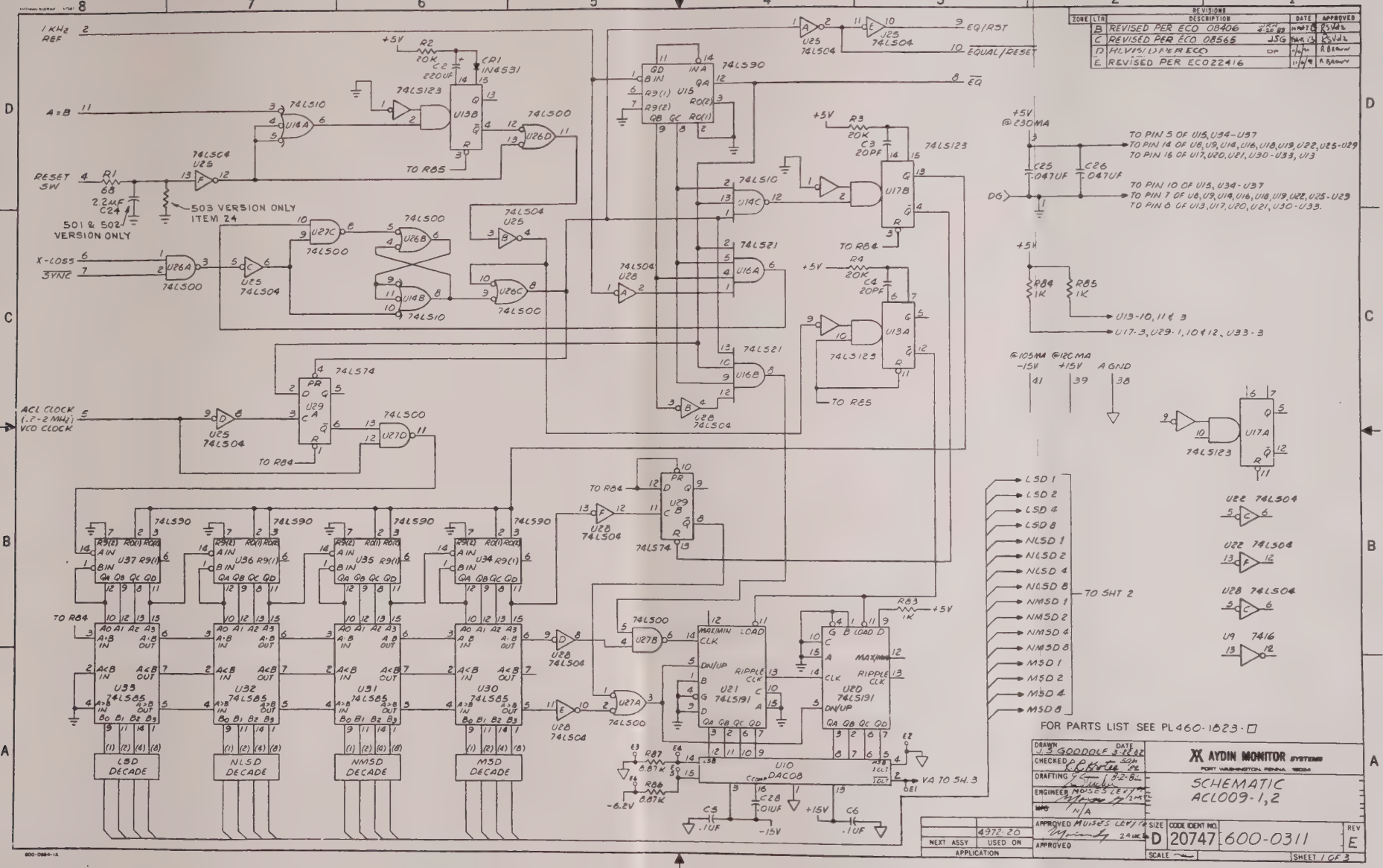
1 KHz REF
A=B
RESET SW
R1 68
2.2uF C24
501 & 502 VERSION ONLY
503 VERSION ONLY ITEM 24
X-LOSS
3VNC
ACL CLOCK (.2-2 MHz) VCO CLOCK
+5V
R2 20K
C2 220UF
CR1 IN4531
74LS123
74LS10
74LS00
74LS04
74LS74
74LS90
74LS85
74LS191
74LS21
74LS10
TO R85
TO R84
TO R83
TO R86
TO R87
TO R88
TO R89
TO R90
TO R91
TO R92
TO R93
TO R94
TO R95
TO R96
TO R97
TO R98
TO R99
TO R100
TO R101
TO R102
TO R103
TO R104
TO R105
TO

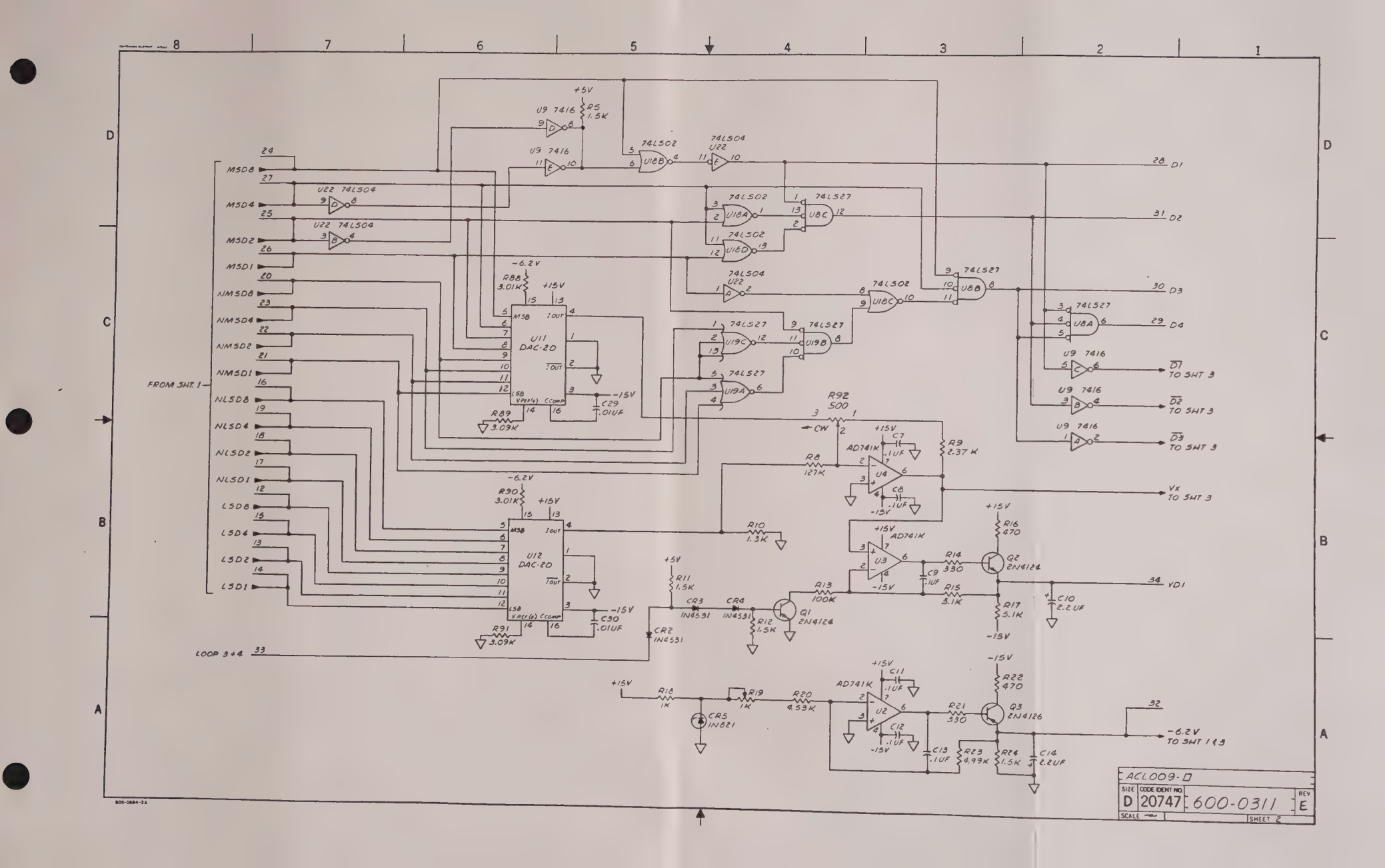
FROM SHT 1
MSD8
MSD4
MSD2
MSD1
NMSD8
NMSD4
NMSD2
NMSD1
NLSD8
NLSD4
NLSD2
NLSD1
LSD8
LSD4
LSD2
LSD1
LOOP 3+4
U11 DAC-20
U12 DAC-20
R88 3.01K
R89 3.09K
R90 3.01K
R91 3.09K
-6.2V
+15V
-15V
C29 .01UF
C30 .01UF
R92 500
CW
R8 127K
R9 2.37 K
R10 1.3K
C7 .1UF
C8 .1UF
U4 AD741K
U3 AD741K
R11 1.5K
R12 1.5K
R13 100K
R14 330
R15 5.1K
R16 470
R17 5.1K
C9 .1UF
C10 2.2 UF
Q1 2N4124
Q2 2N4124
CR2 IN4531
CR3 IN4531
CR4 IN4531
R18 1K
R19 1K
R20 4.53K
CR5 IN821
U2 AD741K
R21 330
R22 470
R23 4.99K
R24 1.5K
C11 .1UF
C12 .1UF
C13 .1UF
C14 2.2UF
Q3 2N4126
U9 7416
U22 74LS04
U18B 74LS02
U18A 74LS02
U16D 74LS02
U18C 74LS02
U19C 74LS27
U19B 74LS27
U19A 74LS27
U8C 74LS27
U8B 74LS27
U8A 74LS27
D1
D2
D3
D4
D1 TO SHT 3
D2 TO SHT 3
D3 TO SHT 3
Vx TO SHT 3
VD1
-6.2V TO SHT 1 & 3
ACL009-D
SIZE D
CODE IDENT NO. 20747
600-0311
REV E
SCALE
SHEET 2

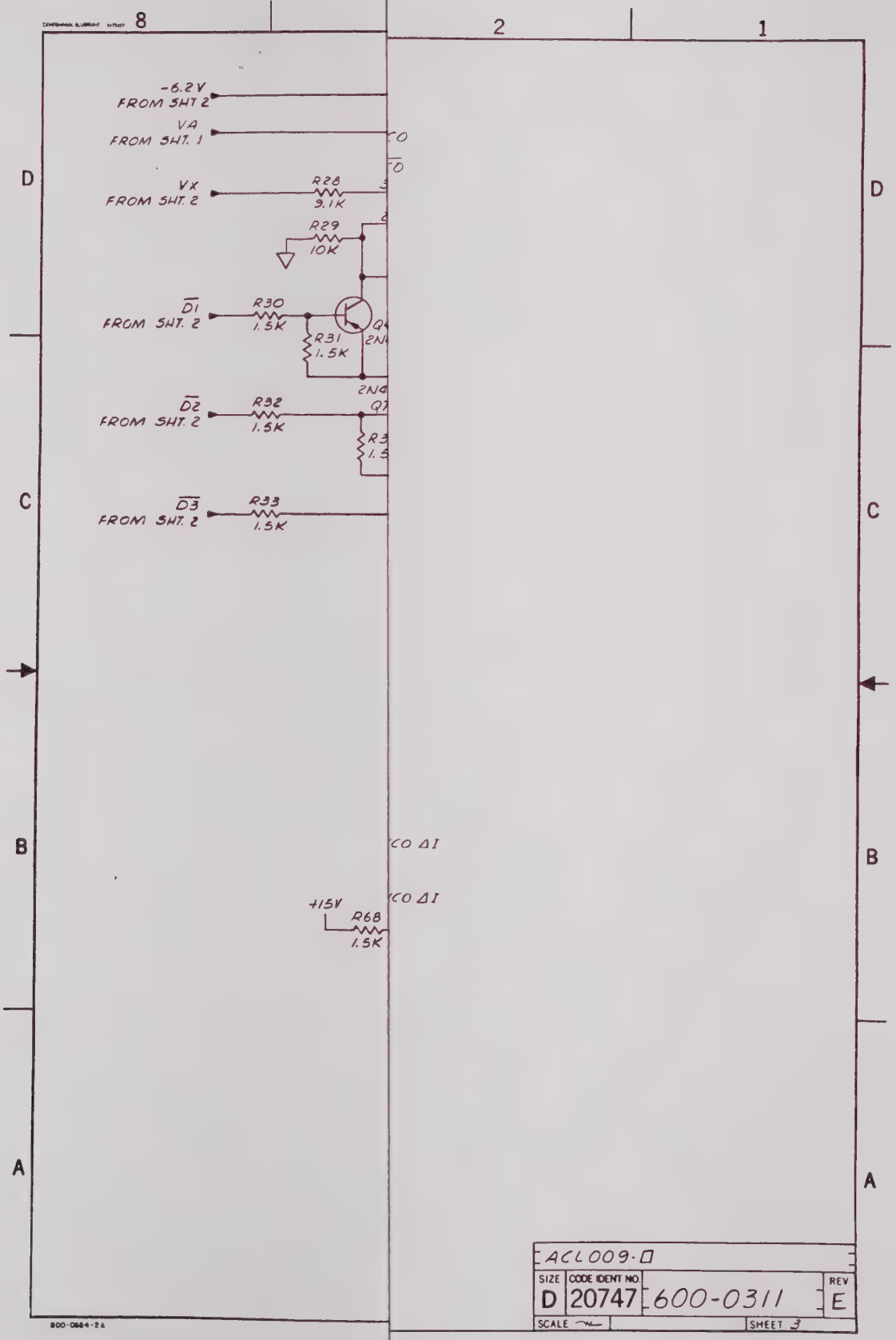
8
2
1
D
C
B
A
-6.2V
FROM SHT 2
VA
FROM SHT. 1
VX
FROM SHT. 2
R28
3.1K
R29
10K
D1
FROM SHT. 2
R30
1.5K
R31
1.5K
D2
FROM SHT. 2
R32
1.5K
D3
FROM SHT. 2
R33
1.5K
+15V
R68
1.5K
ACL009-D
SIZE
D
CODE IDENT NO.
20747
600-0311
REV
E
SCALE
SHEET 3

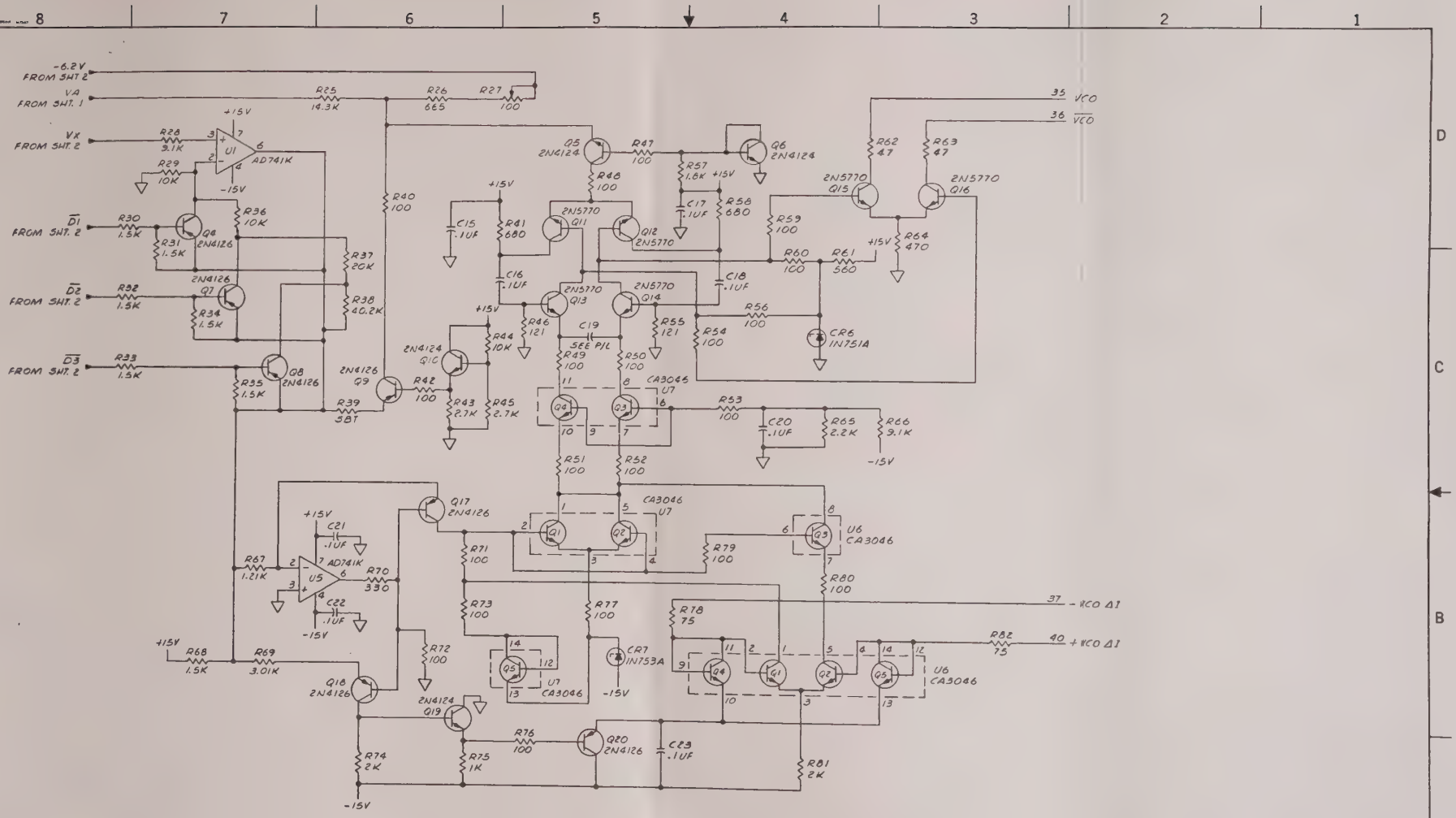
-6.2V FROM SHT 2
VA FROM SHT. 1
VK FROM SHT. 2
D1 FROM SHT. 2
D2 FROM SHT. 2
D3 FROM SHT. 2
+15V
-15V
U1 AD741K
Q4 2N4126
Q7 2N4126
Q8 2N4126
Q9 2N4126
Q10 2N4124
Q11 2N5770
Q12 2N5770
Q13 2N5770
Q14 2N5770
Q5 2N4124
Q6 2N4124
Q15 2N5770
Q16 2N5770
U7 CA3046
U6 CA3046
U5 AD741K
Q17 2N4126
Q18 2N4126
Q19 2N4124
Q20 2N4126
CR6 IN751A
CR7 IN753A
35 VCO
36 VCO
37 -VCO Δ1
40 +VCO Δ1
ACL009-D
SIZE D
CODE IDENT NO 20747
600-0311
REV E
SCALE
SHEET 3

REVISIONS			
ZONE	LTR	DESCRIPTION	DATE / APPROVED
	-	ADDED -503	5-88 J. LAYER

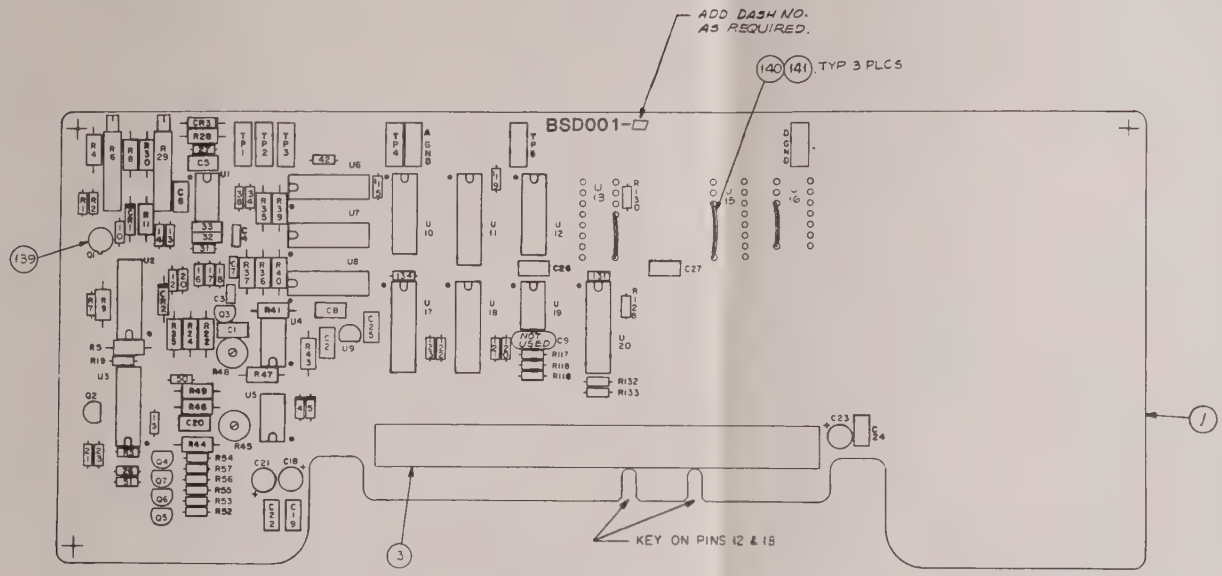

NOTES:

1. FOR GENERAL MANUFACTURING & ENGINEERING NOTES SEE DWG. Nº A)401-0010.

FOR PARTS LIST SEE PL460-1982-502,-503

DRAWN S.HORDESKI DATE 6-24-87	AYDIN MONITOR SYSTEMS	
CHECKED		
DRAFTING		CARD ASSEMBLY BSD001-2,-3
ENGINEER		
MFG		
APPROVED		
APPROVED		

NEXT ASSY	USED ON	SIZE	CODE IDENT NO.		REV
1048-72	APPLICATION	D	20747	AD460-1982-502 & 503	A
		SCALE 2:1		SHEET 1 OF 1	

REVISIONS				
REV	DESCRIPTION	EFFECTIVE ON S/N	DATE	APPROVED
B	[illegible]		2-.88	[illegible]

SHEET	1	2	3	4	5	6	7	8	9	10	11	12	13	14	15	16	17	18	19	20	21	22	23
REVISION																							

AYDIN MONITOR SYSTEMS
FORT WASHINGTON, PENNA. 19034

TITLE PARTS LIST
BSDØØ1-2

CODE IDENT 20747
CONTRACT NO. 1048-72

DRAWN	S.HORDESKI	6-24-87	ENGINEER	[illegible]	[illegible]	DWG NO.	REV
CHECKED	[illegible]		APPROVED	RSV 12	7-1-87	PL460-1982-502	B
DRAFTING	[illegible]	7-1-87				SHEET Ø OF 3	

800-0066

ASSEMBLY: 460-1982-502 REV: B

QPA	ITEM	MONITOR #	MFG PART NBR	DESCRIPTION	REF.DES
		460-1982-502		PARENT CARD ASSY BS D001-2	
1	001	400-1884	400-1884	PWB BSD001	
1	003	108-203-041	7022-041-000001	CONN FING BLOC 41 POS	
12	007	102-419-104	CK06BX104M	CAP .1UF 100V 20%	C
					C
					C
					C
					C
					C1
					C2
					C2
					C2
					C2
					C2
					C2
1	009	102-417-470	RPE110C0G470J10	MONO 47PF COG 5% RAD	C
2	011	102-419-102	CZ15A102M	CAP 1000PF 100V 20%	C
3	013	102-623-002	196D156X0020KA1	TANT DP 15UF 20V 20%	C1
2	018	104-056-115	1N756A	DIODE ZENER CASE 51	CR
1	020	104-308-006	1N821A	DIODE ZENER SILICON	CR
2	022	104-503-014	1N4531	DIODE SIG MINIATURE	CR
1	026	103-647-008	MPS351	TRANS DUAL PNP TO-52	Q
1	028	103-416-006	MPS6521	TRANS SIL NPN TO-92	Q
3	030	103-408-001	2N4124	TRANS SIL NPN TO-92	Q
2	032	103-304-001	2N4126	TRANS SIL PNP TO-92	Q
2	038	100-038-560	CCF-50-56R0-F	MTFLM 56 OHM.125W 5%	R
1	040	100-038-162	CCF-50-1601-F	MTFLM 1.6K .125W 5%	R
2	042	100-215-1401	RN55D1401F	RES 1.4K 1/8W 1%	R
2	044	100-215-2490	RN55D2490F	RES 249 OHMS 1/8W 1%	R
1	046	101-127-201	8417-200	POT 200 .75W 10%	R
1	048	100-038-201	CCF-50-2000-F	MTFLM 200 OHM.125W 5	R
1	050	100-215-1301	RN55D1301F	RES 1.3K 1/8W 1%	R
8	052	100-038-101	CFF-50-1000-F	MTFLM 100 OHM.125W 5%	R1
					R1
					R1
					R2
					R2
					R2
					R2
					R5
1	054	100-215-7680	RN55D7680F	RES 768 OHMS 1/8W 1%	R1
1	056	100-038-431	CCF-50-4300-F	MTFLM 430 OHM.125W 5%	R1
1	058	100-038-222	CCF-50-2201-F	MTFLM 2.2K .125W 5%	R1

ASSEMBLY: 460-1982-502 REV: B

QPA	ITEM	MONITOR #	MFG PART NBR	DESCRIPTION	REF.DES
2	060	100-038-182	CCF-50-1801-F	MTFLM 1.8K .125W 5%	R15
					R51
1	062	100-038-392	CMF-50-392-5%	MTFLM 3.9K .125W 5%	R16
1	064	100-038-470	CCF-50-47R0-F	MTFLM 47 OHM .125W 5%	R17
8	066	100-038-102	CCF-50-1001-F	MET FLM 1KOHM .125 5%	R18
					R27
					R34
					R38
					R42
					R52
					R53
					R54
2	067	100-215-7500	RN55D7500F.	RES 750 OHMS 1/8W 1%	R22
					R24
1	069	100-215-4421	RN55D4421F	RES 4.42K 1/8W 1%	R28
1	071	101-127-102	8417-1000	POT 1K .75W 10%	R29
7	073	100-215-1000	RN55D1000F	RES 100 OHMS 1/8W 1%	R30
					R35
					R36
					R37
					R39
					R40
					R41
1	075	100-038-512	CCF-50-5101-F	MTFLM 5.1K .125W 5%	R31
2	077	100-444-003	V53C1-10K-.1%	RES 10K .3W .1%	R32
					R33
2	079	100-215-4751	RN55D4751F	RES 4.75K 1/8W 1%	R43
					R44
2	081	101-156-501	3339P-1-501	POT 500 .5W 10%	R45
					R48
2	083	100-215-4991	RN55D4991F	RES 4.99K 1/8W 1%	R46
					R47
1	085	100-215-1431	RN55D1431F	RES 1.43K 1/8W 1%	R49
1	087	100-038-822	CCF-50-8201-F	MTFLM 8.2K .125W 5%	R55
1	089	100-038-123	CCF-50-1202-F	MTFLM 12K .125W 5%	R56
1	091	100-038-132	CCF-50-1301-F	MTFLM 1.3K .125W 5%	R57
6	093	100-038-272	CCF-50-2701-F	MTFLM 2.7K .125W 5%	R115
					R119
					R128
					R130
					R131
					R134
1	095	100-038-121	RG1/8-120OHM-5%	MTFLM 120 OHM.125W 5	R116
2	097	100-038-100	RG1/8-10-OHM-5%	MTFLM 10 OHM.125W 5%	R117
					R118
6	099	100-038-221	CFF-50-2200-F	MTFLM 220 OHM.125W 5%	R120
					R121
					R122
					R123
					R132
					R133
2	106	139-163-002	MC1458P	IC OP AMP 8 PIN DIP	U1
					U5
2	108	139-209-002	CA3046	TRANS ARRAY	U2
					U3

ASSEMBLY: 460-1982-502 REV: B

QPA	ITEM	MONITOR #	MFG PART NBR	DESCRIPTION	REF. DES
1	110	139-174-001	UA741CN	IC OP AMP 8 PIN DIP	L
3	112	139-232-001	NE521N	IC VOLT COMP 14 PIN	L
					L
1	114	139-572-001	LM79L05ACZ	VOLTAGE REG TO-92	L
2	116	139-152-400	SN74S00N	QUAD POS NAN 14P	L
					U1
3	118	139-152-175	SN74S175N	FLIP FLOP QUAD-D 16P	U1
					U1
					U1
1	124	139-542-003	UA9637ACP	IC LINE RECVR 8 PIN	U1
1	126	139-152-135	SN74S135N	EXC-OR/NOR GATE 16P	U2
5	133	121-202-005	SPCJ-200-05	TEST POINT PC GRN	TP
					TP
					TP
					TP
					TP
1	134	121-202-010	SPCJ-200-03	TEST POINT PC BLK	D GN
1	135	121-202-009	SPCJ-200-01	TEST POINT PC WHT	A GN
1	139	131-049-001	RC-TO18100-2A	PAD TRANS TO18 6PIN	
1	140	113-001-006	299/1	WIRE BUS 26 AWG	
1	141	114-001-006	6031 26 09 11	TUBING TEF 26 AWG WHT	
		AD460-1982-502	ASSEMBLY DRAWIN	BSD001-2	
		SD600-0397-502	SCHEMATIC DIAGR	BSD001-2	
		AT297-1165	ACCEPTANCE TEST	CHKOUT PRCD BSD001-2	

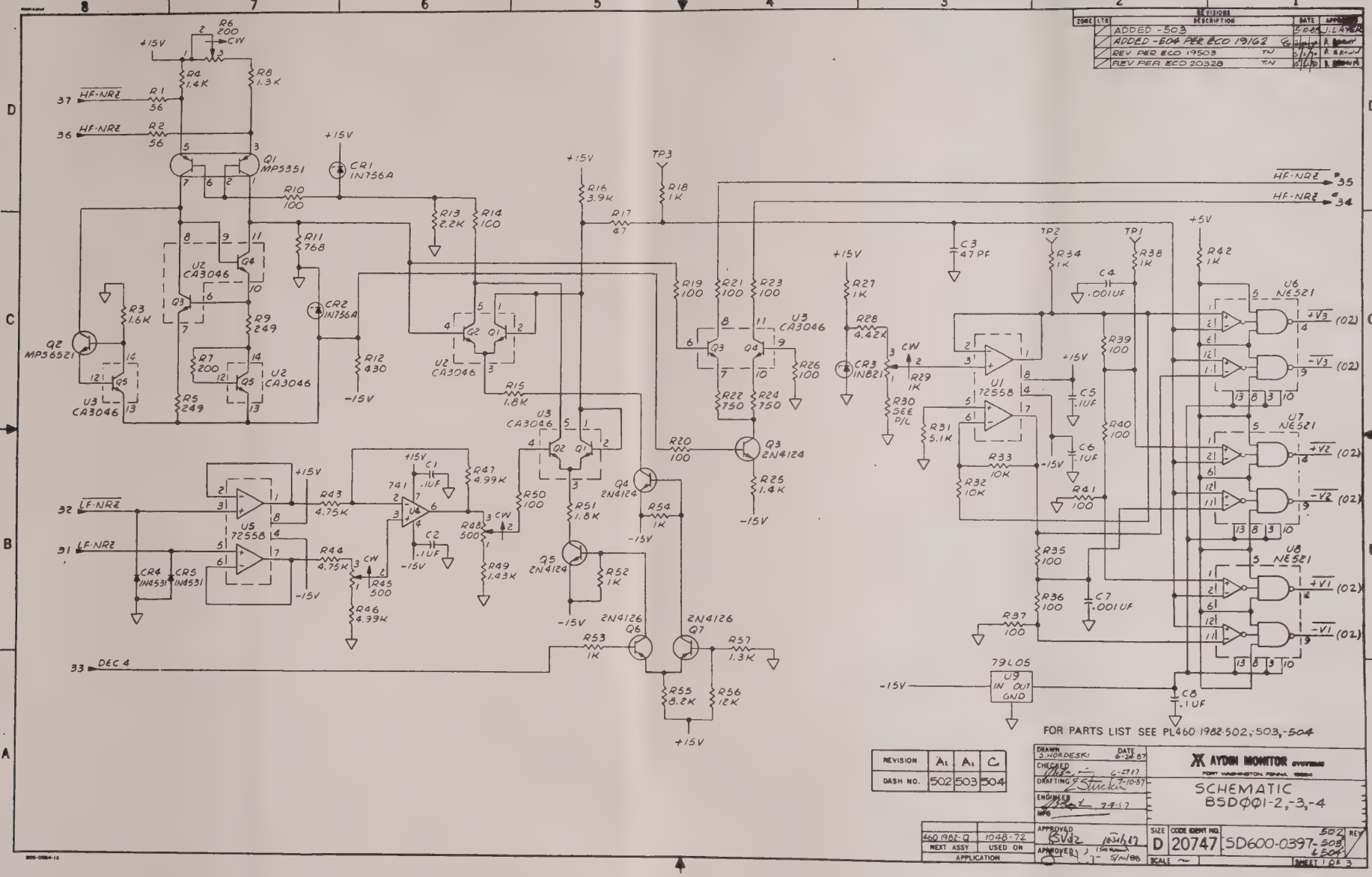

REVISIONS
ZONE LTR DESCRIPTION DATE APPROVED
ADDED -503 5-10-88 J. LAYER
ADDED -504 PER ECO 19162
REV PER ECO 19503 TN
REV PER ECO 20328 TN
HF-NRZ
LF-NRZ
DEC 4
Q1 MP5351
Q2 MP56521
U2 CA3046
U3 CA3046
U5 72558
U1 72558
U6 NE521
U7 NE521
U8 NE521
U9 79L05 IN OUT GND
Q3 2N4124
Q4 2N4124
Q5 2N4124
Q6 2N4126
Q7 2N4126
CR1 1N756A
CR2 1N756A
CR3 1N821
CR4 1N4531
CR5 1N4531
741
+15V
-15V
+5V
TP1
TP2
TP3
+V3 (02)
-V3 (02)
+V2 (02)
-V2 (02)
+V1 (02)
-V1 (02)
FOR PARTS LIST SEE PL460 1982-502,-503,-504
REVISION A1 A1 C
DASH NO. 502 503 504
DRAWN S. HORDESKI DATE 6-24-87
CHECKED 6-29-87
DRAFTING 7-10-87
ENGINEER 7-9-87
APPROVED 10-14-87
APPROVED 5/10/88
AYDIN MONITOR SYSTEMS
FORT WASHINGTON, PENNA.
SCHEMATIC
BSDØØ1-2,-3,-4
460 1982-Q 1048-72
NEXT ASSY USED ON
APPLICATION
SIZE D CODE IDENT NO. 20747 SD600-0397-502 503 & 504 REV
SCALE
SHEET 1 OF 3

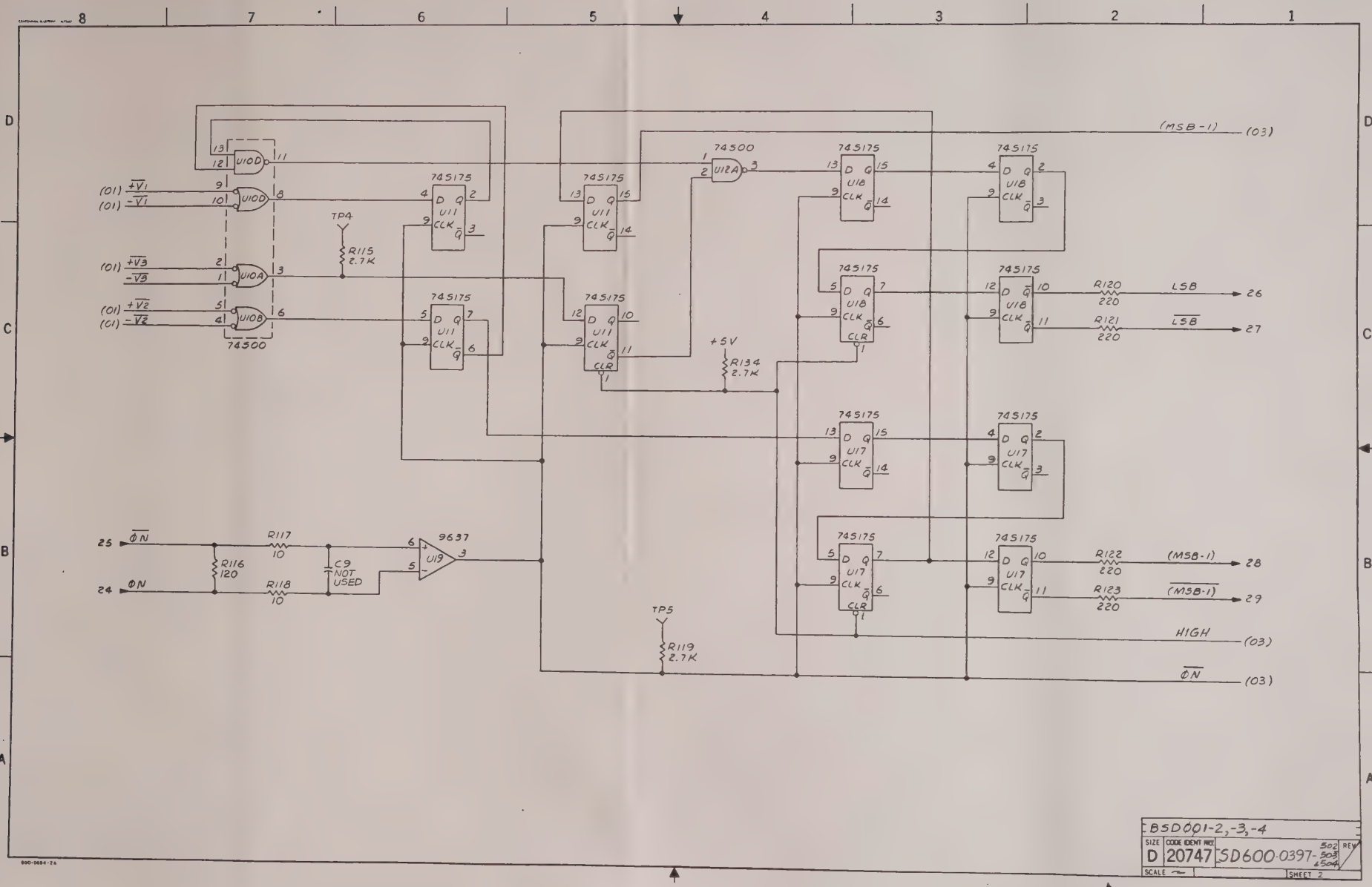
8
7
6
5
4
3
2
1
D
C
B
A
(MSB-1) (03)
74500
U12A
745175
U11
U18
U17
U10D
U10C
U10A
U10B
(01) +V1
(01) -V1
(01) +V3
-V3
(01) +V2
(01) -V2
TP4
R115 2.7K
+5V
R134 2.7K
TP5
R119 2.7K
25 ØN
24 ØN
R116 120
R117 10
R118 10
C9 NOT USED
9637
U19
R120 220
R121 220
R122 220
R123 220
LSB 26
LSB 27
(MSB-1) 28
(MSB-1) 29
HIGH (03)
ØN (03)
BSD001-2,-3,-4
SIZE D
CODE IDENT NO. 20747
SD600-0397-502 503 &504
REV
SCALE
SHEET 2

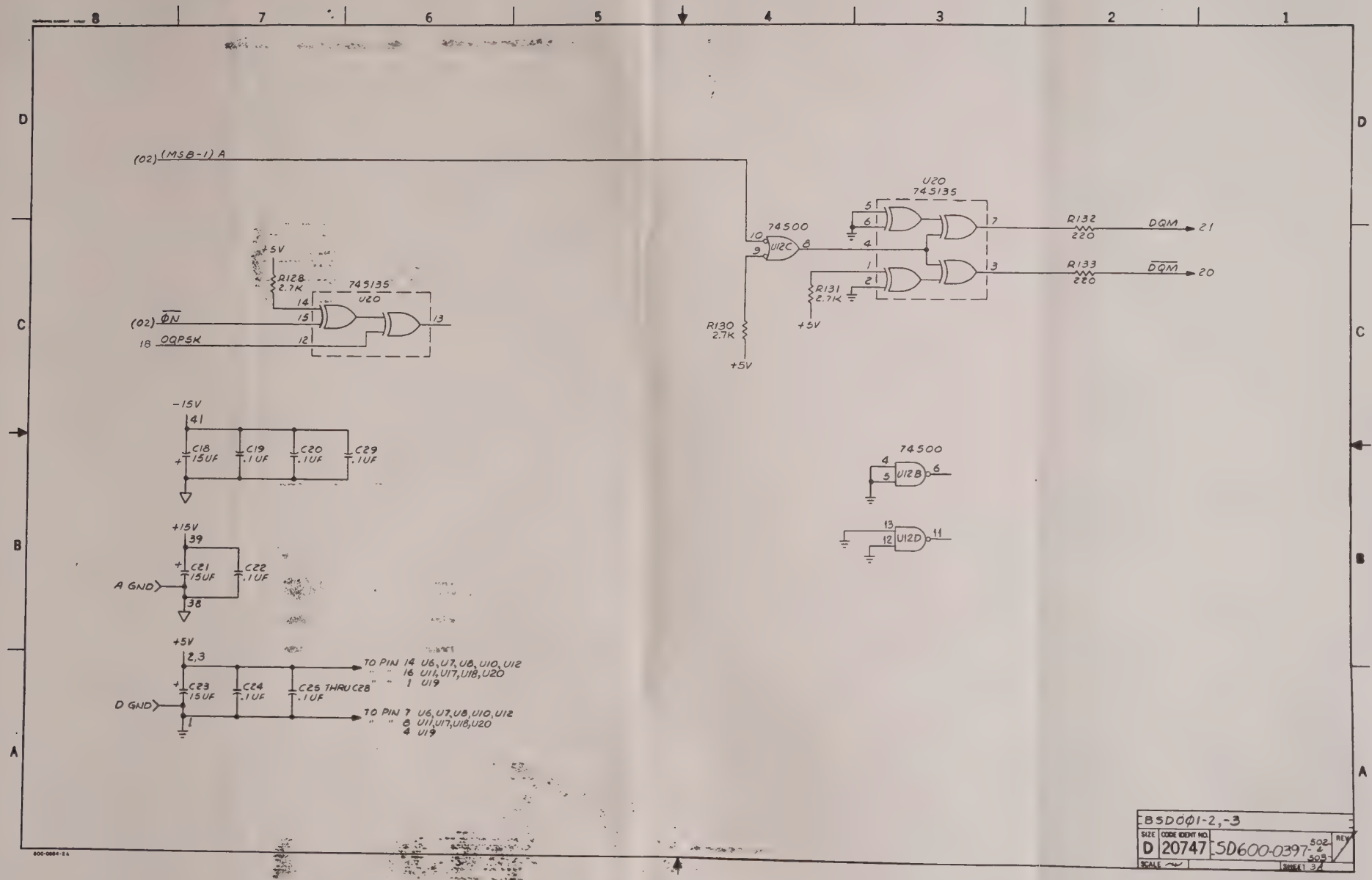
(02) (MSB-1) A
+5V
R128 2.7K
74S135
U20
14
15
13
(02) ØN
18 OQPSK
12
74S00
U12C
10
9
8
U20
74S135
5
6
7
4
1
3
2
R132 220
R133 220
DQM
21
DQM
20
R131 2.7K
+5V
R130 2.7K
+5V
-15V
41
C18 15UF
C19 .1UF
C20 .1UF
C29 .1UF
+15V
39
C21 15UF
C22 .1UF
A GND
38
74S00
4
5
U12B
6
13
12
U12D
11
+5V
2,3
C23 15UF
C24 .1UF
C25 THRU C28 .1UF
D GND
1
TO PIN 14 U6, U7, U8, U10, U12
" " 16 U11, U17, U18, U20
" " 1 U19
TO PIN 7 U6, U7, U8, U10, U12
" " 8 U11, U17, U18, U20
4 U19
B5D0Ø1-2,-3
SIZE D
CODE IDENT NO. 20747
SD600-0397-502 & 503
REV
SCALE
SHEET 3

ZONE	LTR	REVISIONS DESCRIPTION	DATE	APPROVED
	5	REVISED PER ECO 12102		
		ADDED -502		
		ADDED -504 ECO #22800		

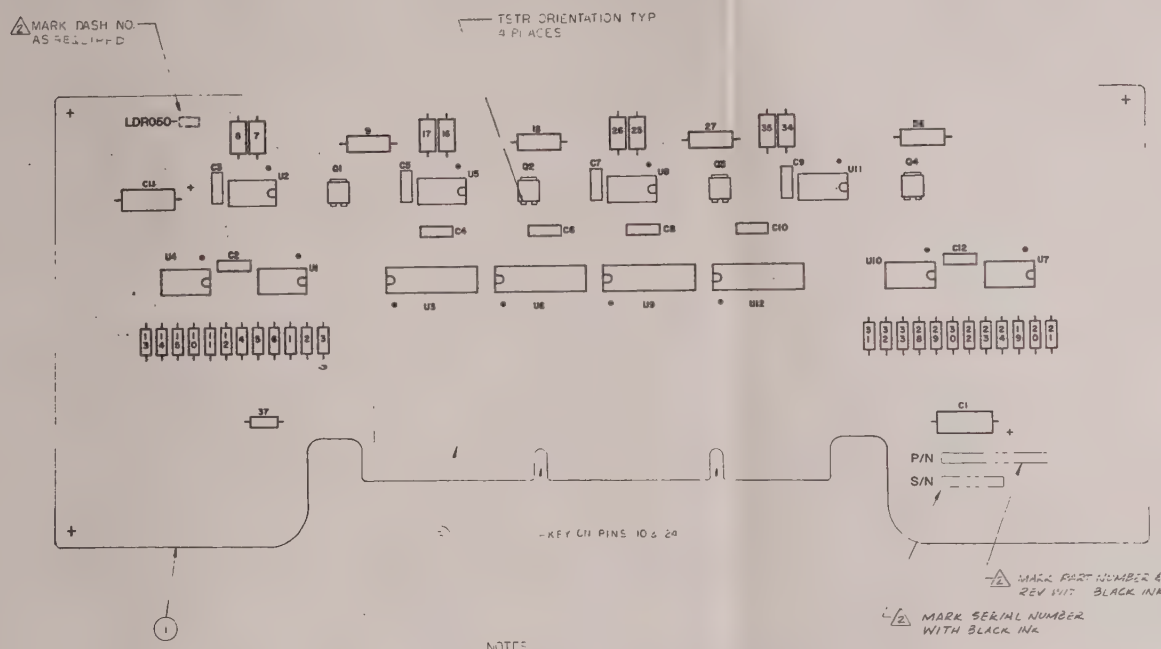

NOTES

1. FOR GENERAL MANUFACTURING & ENGINEERING NOTES SEE DWG NO. A1235-- 57

2. MARK IAW MARKING STANDARD 289-8004.

REVISION	B1	A1	N/A	—
DASH NO.	501	502	503	504

FOR PARTS LIST SEE PL460-1985-☐

DRAWN J.T. LUCKEY DATE 5/11/85	AYDIN MONITOR SYSTEMS FORT WASHINGTON, PENNA. 19034
CHECKED	CARD ASSEMBLY LDR050-☐
DRAFTING	
ENGINEER	
MFG	
APPROVED	SIZE D · CODE IDENT NO. 20747 · AD 460-1985-☐ · REV
APPROVED	SCALE 2:1 · SHEET 1 OF

NEXT ASSY	USED ON
	1134-91
APPLICATION	

800-0884-1A

DUPLICATE ORIGINAL

REVISIONS				
REV	DESCRIPTION	EFFECTIVE ON S/N	DATE	APPROVED
B	REVISED PER ECO 12102		10/29/85	
C	REVISED PER ECO 12397 KG		1/10/86	
D	REVISED PER ECO 132.04 CE		6/9/86	R.T.
E	REVISED PER ECO 18883		1-17-90	JAKE LAYER

SHEET	1	2	3	4	5	6	7	8	9	10	11	12	13	14	15	16	17	18	19	20	21	22	23
REVISION	—	—	—	—																			

AYDIN MONITOR SYSTEMS
FORT WASHINGTON, PENNA. 19034

TITLE PARTS LIST
LDR050-1

CODE IDENT 20747
CONTRACT NO. 1134-91

DRAWN	J.T. LUCKEY	9-25-85	ENGINEER		9/25/85	DWG NO.	REV
CHECKED	ES		APPROVED		9/25/85	PL460-1985-501	E
DRAFTING		10-3-85				SHEET 1 OF 2	

800-0066

PARTS LIST	DESIGN ACTIVITY IDENTIFICATION AYDIN COMPUTER AND MONITOR DIVISION HORSHAM, PA. 19044	CONTRACT NO.	CAGE CODE 20747	PL460-1985-501	REV
LIST TITLE LDR050-1		SUBCONTRACT NO.			SHEET NO. 2

FIND NO	QTY REQ	U/M	CAGE CODE	DOCUMENT NUMBER	PART OR IDENTIFYING NUMBER	NOMENCLATURE OR DESCRIPTION	NOTES
001	1	EA		400-1887	400-1887	PWB LDR050	
003	1	EA	91662	108-203-041	7022-041-000001	CONN FING BLOC 41 POS	
006	2	EA	56289	102-367-685	150D685X9035B2	CAP 6.8UF 35V 10%	C1 C11
008	6	EA	71590	102-419-104	CK06BX104M	CAP .1UF 100V 20%	C2 C3 C5 C7 C9 C12
010	4	EA		102-419-473	200-100-Z5U-473M	CAP .047UF 100V 20%	C4 C6 C8 C10
013	4	EA		103-513-001	IRFD123	TRANSISTOR N-CHANNEL	Q1 Q2 Q3 Q4
014	8	EA	91637	100-037-121	CCF-07-121-J	MTFLM 120 OHM .25W 5%	R2 R5 R11 R14 R20 R23 R29 R3
015	4	EA	20747	100-215-49R9	100-215-49R9	REPLACE W/ 100-255-49R9	R7 R16 R25 R34
016	4	EA	20747	100-215-4991	100-215-4991	USE 100-255-4991	R8 R17 R26 R35
019	4	EA	75042	100-314-002	BW-20.335%	RES 0.33 OHMS 1W 5%	R9 R18 R27 R36
020	1	EA	20747	100-003-470	100-003-470	OBSOL USE 100-037-470	R37
023	4	EA	01295	139-542-003	UA9637ACP	IC LINE RECVR 8 PIN	U1 U4 U7 U10
025	4	EA	18324	139-174-001	UA741CN	IC OP AMP 8 PIN DIP	U2 U5 U8 U11
027	4	EA	18324	139-598-3037	N74F3037N	IC LINE DRIVER 16 PIN	U3 U6 U9 U12
				AD 460-1985-501		ASSEMBLY DRAWING - LDR050-1	
				SD 600-0400		SCHEMATIC DIAGRAM - LDR050	
				AT 297-0995		ACCEPTANCE TEST PROCEDURE - LDR050	

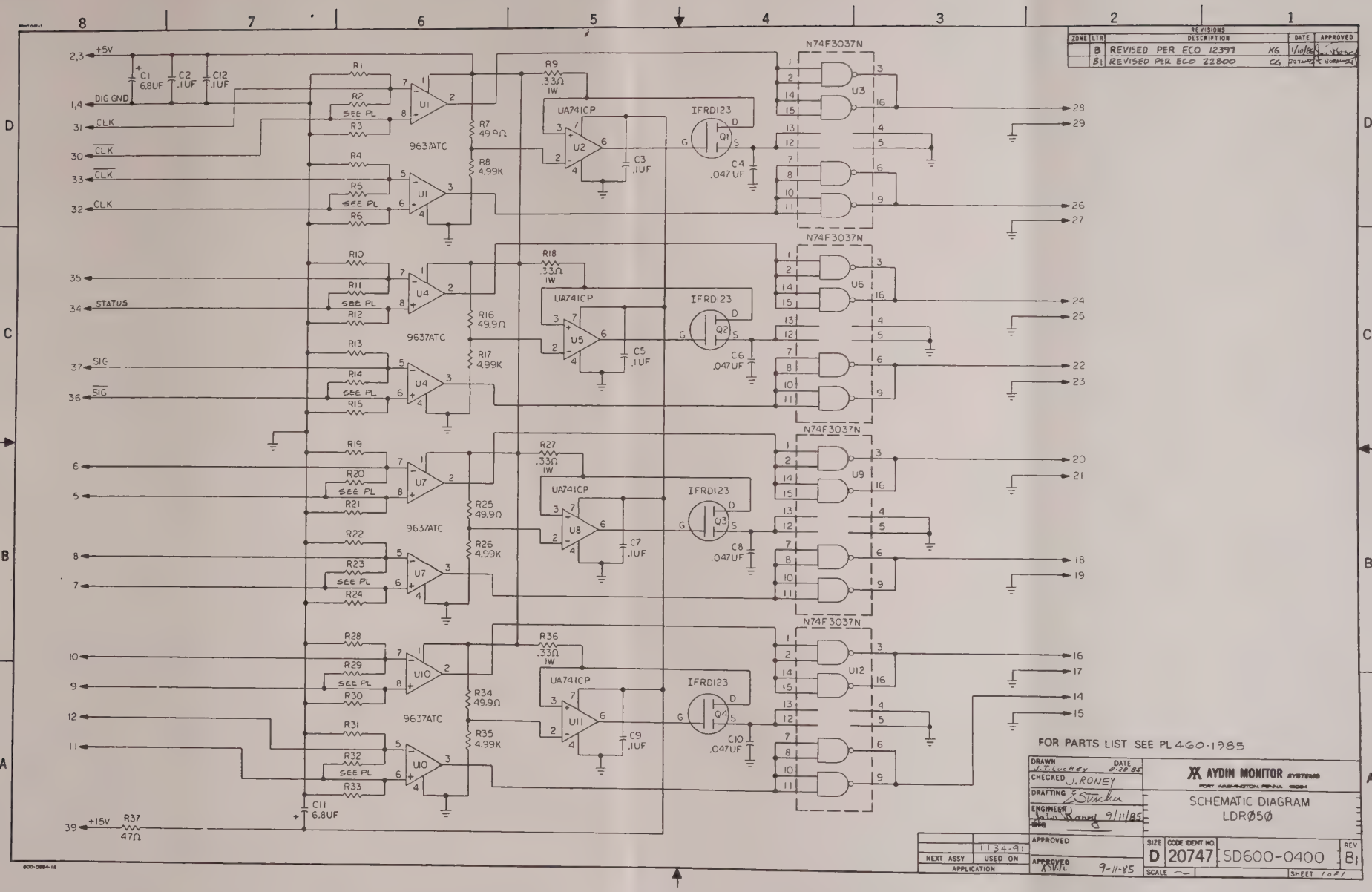

REVISIONS
ZONE LTR DESCRIPTION DATE APPROVED
B REVISED PER ECO 12397 KG 1/10/85
B1 REVISED PER ECO 22800 CG
+5V
DIG GND
CLK
STATUS
SIG
+15V
C1 6.8UF
C2 .1UF
C12 .1UF
C11 6.8UF
R37 47Ω
9637ATC
UA741CP
IFRD123
N74F3037N
SEE PL
R9 .33Ω 1W
R18 .33Ω 1W
R27 .33Ω 1W
R36 .33Ω 1W
R7 49.9Ω
R8 4.99K
R16 49.9Ω
R17 4.99K
R25 49.9Ω
R26 4.99K
R34 49.9Ω
R35 4.99K
C3 .1UF
C4 .047UF
C5 .1UF
C6 .047UF
C7 .1UF
C8 .047UF
C9 .1UF
C10 .047UF
FOR PARTS LIST SEE PL 460-1985
DRAWN J.T. Luckey DATE 8-28-85
CHECKED J. RONEY
DRAFTING E. Stucker
ENGINEER John Kanny 9/11/85
APPROVED
APPROVED RSV.R 9-11-85
AYDIN MONITOR SYSTEMS
FORT WASHINGTON, PENNA. 19034
SCHEMATIC DIAGRAM
LDR050
SIZE D CODE IDENT NO. 20747 SD600-0400 REV B1
SCALE ~ SHEET 1 OF 1
NEXT ASSY 1134-91 USED ON
APPLICATION

REVISIONS				
ZONE	LTR	DESCRIPTION	DATE	APPROVED
	B	REVISED PER E.C. 15036		
	C	REVISED PER ECO 15587		
	C1	REVISED PER ECO 15000		
	D	RELEASED		
	E	RELEASED		

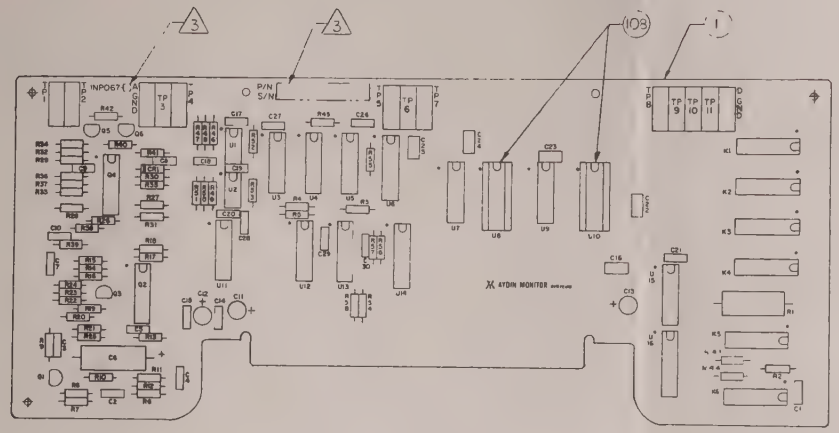

NOTES

1. FOR GENERAL MANUFACTURING WORKMANSHIP STANDARDS SEE DWG. NO. A) 285-8057.
2. MAXIMUM COMPONENT PROFILE IS .437.
3. MARK COMPLETE PART NO., LATEST REV LEVEL, DASH NO. AND SERIAL NO. IAW AYDIN STANDARD 299-9004, APPROX WHERE SHOWN.

REVISION	E	B	-
DASH NO.	501	502	503

FOR SCHEMATIC DIAGRAM SEE SD600-0461
FOR PARTS LIST SEE PL 460-2051-☐

DRAWN	WK HOUSEAL	DATE	5-16-86
CHECKED			
DRAFTING			
ENGINEER			
MFG			

AYDIN MONITOR SYSTEMS
FORT WASHINGTON PENNA. 19034

CARD ASSEMBLY
INP067-☐

		APPROVED	
	1368-82		
NEXT ASSY	USED ON	APPROVED	
APPLICATION			

SIZE	CODE IDENT NO		REV
D	20747	AD460-2051-☐	

SCALE 1½:1 SHEET 1 OF 1

REVISIONS

REV	DESCRIPTION	EFFECTIVE ON S/N	DATE	APPROVED
B	REVISED PER ECO 14264 PJC 2-3-87		2-4-87	
C	REVISED PER ECO 15587 WKH 11-9-87		11-13-87	
D	REVISED PER ECO 16391		4-15-88	
E	REVISED PER ECO 16518		5-17-89	
E1	DELETED 113-001-006		2-2-89	ES
F	REV IAW ECO 22503		11/8/91	R.S.Volz
G	REV PER ECO 22616		12/5/91	R.S.Volz

SHEET	1	2	3	4	5	6	7	8	9	10	11	12	13	14	15	16	17	18	19	20	21	22	23
REVISION																							

AYDIN MONITOR SYSTEMS
FORT WASHINGTON, PENNA. 19034

TITLE PARTS LIST
CARD ASSEMBLY
INP067-1

CODE IDENT 20747
CONTRACT NO. 1368-82

DRAWN	WK HOUSEAL	9-2-86	ENGINEER		10-14-86	DWG NO. PL 460-2051-501	REV E
CHECKED	ES		APPROVED		10-14-86		
DRAFTING	ES Tucker	10-14-86				SHEET 0 OF 3	

800-6000

PARTS LIST	DESIGN ACTIVITY IDENTIFICATION AYDIN COMPUTER AND MONITOR DIVISION HORSHAM, PA. 19044	CONTRACT NO.	CAGE CODE 20747	PL460-2051-501	REV G

LIST TITLE CARD ASSY INP067-1	SUBCONTRACT NO.		SHEET NO. 2

FIND NO	QTY REQ	U/M	CAGE CODE	DOCUMENT NUMBER	PART OR IDENTIFYING NUMBER	NOMENCLATURE OR DESCRIPTION	NOTES
001	1	EA	20747	400-1947	400-1947	PWB INP067	
004	1	EA	18796	102-419-474	RPE113Z5U474M100V	CAP .47UF 100V 20%	C1
005	25	EA	71590	102-419-104	CK06BX104M	CAP .1UF 100V 20%	C2 C3 C4 C5 C7 C8 C9 C10 C14 C15 C16 C17 C18 C19 C20 C21 C22 C23 C24 C25 C26 C27 C28 C29 C30
007	1	EA	56289	102-305-107	150D107X0020S2	CAP 100UF 20V 20%	C6
009	3	EA	56289	102-623-002	196D156X0020KA1	TANT DP 15UF 20V 20%	C11 C12 C13
012	1	EA	04713	104-056-106	1N751A	DIODE ZENER CASE 51	CR1
018	6	EA	94696	106-058-022	W171DIP-25	RELAY REED DIP	K1 K2 K3 K4 K5 K6
025	1	EA	13327	103-439-002	KK4392	TRANS FET TO-92	Q1
027	2	EA	86684	139-209-002	CA3046	TRANS ARRAY	Q2 Q4
029	2	EA	04713	103-408-001	2N4124	TRANS SIL NPN TO-92	Q3 Q6
031	1	EA	04713	103-304-001	2N4126	TRANS SIL PNP TO-92	Q5
038	1	EA	81349	100-009-510	RC42GF510J	RES 51 OHMS 2W 5%	R1
039	9	EA	11502	100-037-102	RG1/4-1K-5%	MTFLM 1K .25W 5%	R2 R10 R11 R15 R26 R27 R34 R46 R49
040	10	EA	91637	100-037-472	CCF-07-472-J	MTFLM 4.7K .25W 5%	R3 R42 R45 R52 R53 R54 R55 R56 R57 R58
041	4	EA	91637	100-037-222	CCF-07-222-J	MTFLM 2.2K .25W 5%	R4 R5 R35 R41
043	1	EA	91637	100-037-103	CCF-07-103-J	MTFLM 10K .25W 5%	R6
044	1	EA	81349	100-003-106	RC07GF106J	RES 10MEG 1/4W 5%	R7
045	7	EA	91637	100-037-101	CCF-07-101-J	MTFLM 100 OHM .25W 5%	R8 R16 R19 R21 R31 R32 R37

PARTS LIST	DESIGN ACTIVITY IDENTIFICATION AYDIN COMPUTER AND MONITOR DIVISION HORSHAM, PA. 19044	CONTRACT NO.	CAGE CODE 20747	 PL460-2051-501	REV G

LIST TITLE	SUBCONTRACT NO.		SHEET NO.
CARD ASSY INP067-1			3

FIND NO	QTY REQ	U/M	CAGE CODE	DOCUMENT NUMBER	PART OR IDENTIFYING NUMBER	NOMENCLATURE OR DESCRIPTION	NOTES
046	2	EA	91637	100-037-221	CCF-07-221-J	MTFLM 220 OHM .25W 5%	R9 R12
048	2	EA	91637	100-037-223	CCF-07-223-J	MTFLM 22K .25W 5%	R13 R25
049	2	EA	91637	100-037-682	CCF-07-682-J	MTFLM 6.8K .25W 5%	R14 R20
052	2	EA	91637	100-037-470	CCF-07-470-J	MTFLM 47 OHM .25W 5%	R17 R18
056	1	EA	91637	100-037-123	CCF-07-123-J	MTFLM 12K .25W 5%	R22
057	1	EA	91637	100-037-272	CCF-07-272-J	MTFLM 2.7K .25W 5%	R23
058	1	EA	91637	100-037-391	CCF-07-391-J	MTFLM 390 OHM .25W 5%	R24
061	3	EA	91637	100-037-153	CCF-07-153-J	MTFLM 15K .25W 5%	R28 R29 R36
062	1	EA	91637	100-037-911	CCF-07-911-J	MTFLM 910 OHM .25W 5%	R30
063	2	EA	81349	100-255-1502	RNC55H1502F	MTFLM 15K .1W 1%	R47 R51
065	1	EA	91637	100-037-152	CCF-07-152-J	MTFLM 1.5K .25W 5%	R33
067	1	EA	91637	100-037-203	CCF-07-203-J	MTFLM 20K .25W 5%	R38
068	1	EA	91637	100-037-105	CCF-07-105-J	MTFLM 1MEG .25W 5%	R39
069	1	EA	91637	100-037-332	CCF-07-332-J	MTFLM 3.3K .25W 5%	R40
070	2	EA	91637	100-037-220	CCF-07-220-J	MTFLM 22 OHM .25W 5%	R43 R44
071	2	EA	91637	100-037-242	CCF-07-242-J	MTFLM 2.4K .25W 5%	R48 R50
085	11	EA	30035	121-202-005	SPCJ-200-05	TEST POINT PC GRN	TP1 TP2 TP3 TP4 TP5 TP6 TP7 TP8 TP9 TP10 TP11
087	1	EA	30035	121-202-010	SPCJ-200-03	TEST POINT PC BLK	D GND
088	1	EA	30035	121-202-009	SPCJ-200-01	TEST POINT PC WHT	A GND
090	2	EA	27014	139-139-003	LM311N	IC VOLT COMP 8 PIN	U1 U2
092	1	EA	01295	139-198-432	SN74LS32N	QUAD 2 INPT POS OR 14PIN	U3
093	1	EA	01295	139-198-197	SN74LS197N	CTR/LATCH BIN 14P	U4
094	2	EA	01295	139-198-400	SN74LS00N	QUAD 2IN NAND 14P	U5 U13

PARTS LIST	DESIGN ACTIVITY IDENTIFICATION AYDIN COMPUTER AND MONITOR DIVISION HORSHAM, PA. 19044	CONTRACT NO.	CAGE CODE 20747	PL460-2051-501	REV G

LIST TITLE CARD ASSY INP067-1	SUBCONTRACT NO.		SHEET NO. 4

FIND NO	QTY REQ	U/M	CAGE CODE	DOCUMENT NUMBER	PART OR IDENTIFYING NUMBER	NOMENCLATURE OR DESCRIPTION	NOTES
095	2	EA	01295	139-198-283	SN74LS283N	4BIT BIN ADDR 16P	U6 U14
096	3	EA	01295	139-046-417	SN7417N	HEX BUFFER/DR 14P	U7 U11 U15
097	1	EA	20747	291-0427-502	291-0427-502	INP067-1 PROM 2	U8
098	1	EA	01295	139-046-416	SN7416N	HEX INV.BUFFER/DR 14P	U9
099	1	EA	20747	291-0427-501	291-0427-501	INP037-1 PROM 1	U10
103	1	EA	01295	139-198-404	SN74LS04N	HEX INVERTER 14P	U12
107	1	EA	01295	139-198-139	SN74LS139AN	2-4DEC/DEM 16P	U16
108	2	EA	91506	108-934-018	516-AG37D	SOCK PC 16 PIN	
				AD 460-2051-501		ASSEMBLY DRAWING - CARD ASSY INP067-1	
				SD 600-0461		SCHEMATIC DIAGRAM - INP067	
				AT 297-1113		ACCEPTANCE TEST PROCEDURE - INP067	

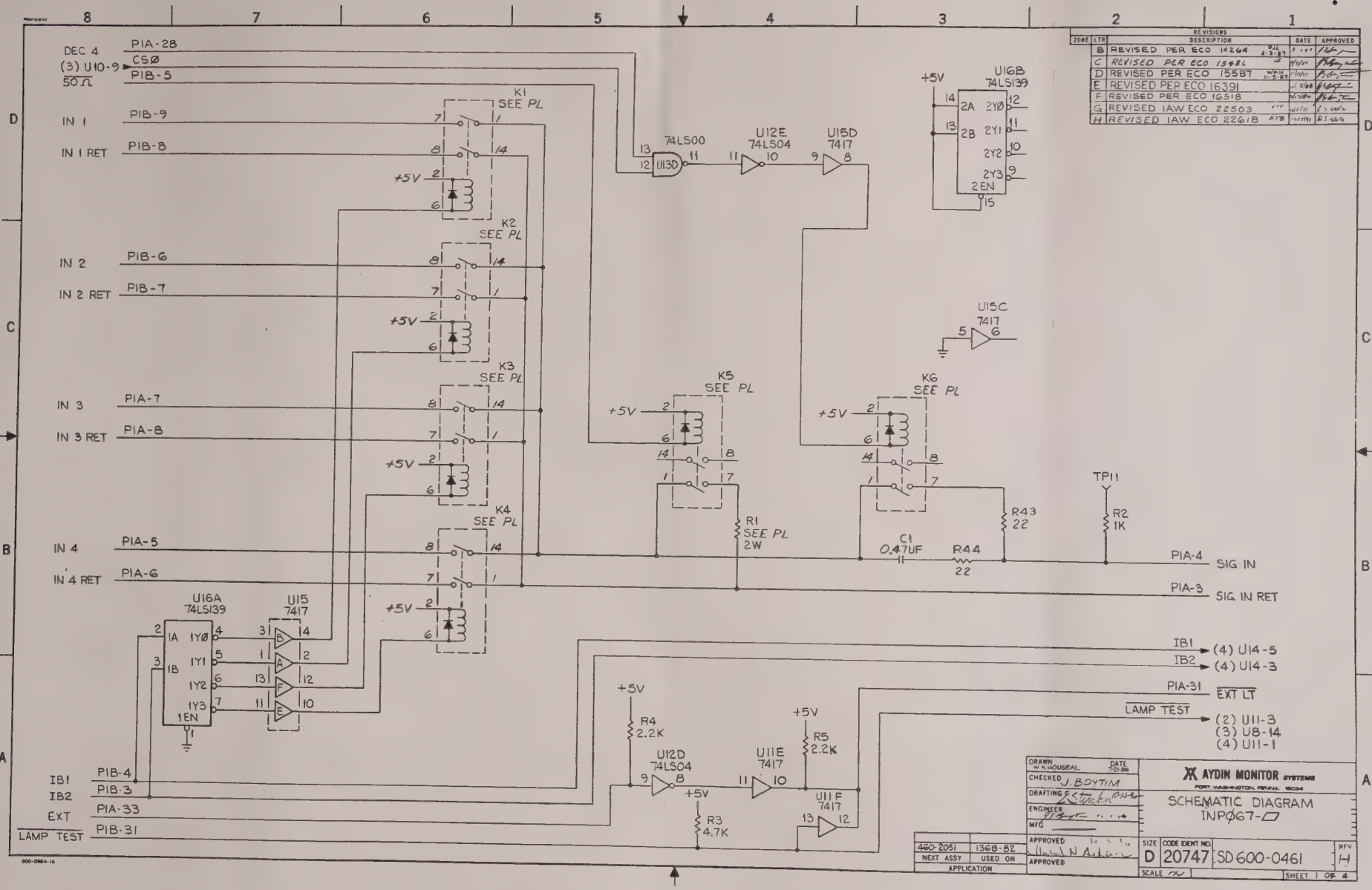
DEC 4
(3) U10-9
50Ω
CSØ
PIA-28
PIB-5
IN 1
PIB-9
IN 1 RET
PIB-8
IN 2
PIB-6
IN 2 RET
PIB-7
IN 3
PIA-7
IN 3 RET
PIA-8
IN 4
PIA-5
IN 4 RET
PIA-6
K1 SEE PL
K2 SEE PL
K3 SEE PL
K4 SEE PL
K5 SEE PL
K6 SEE PL
+5V
74LS00
U13D
U12E 74LS04
U15D 7417
U16B 74LS139
2A 2Y0
2B 2Y1
2Y2
2Y3
2EN
U15C 7417
U16A 74LS139
1A 1Y0
1B 1Y1
1Y2
1Y3
1EN
U15 7417
R1 SEE PL 2W
C1 0.47UF
R43 22
R44 22
TP11
R2 1K
PIA-4 SIG IN
PIA-3 SIG IN RET
IB1 (4) U14-5
IB2 (4) U14-3
PIA-31 EXT LT
LAMP TEST (2) U11-3 (3) U8-14 (4) U11-1
R4 2.2K
R5 2.2K
R3 4.7K
U12D 74LS04
U11E 7417
U11F 7417
IB1 PIB-4
IB2 PIB-3
EXT PIA-33
LAMP TEST PIB-31
REVISIONS
B REVISED PER ECO 14264
C REVISED PER ECO 15486
D REVISED PER ECO 15587
E REVISED PER ECO 16391
F REVISED PER ECO 16518
G REVISED IAW ECO 22503
H REVISED IAW ECO 22618
DRAWN W.K. HOUSEAL
CHECKED J. BOYTIM
DRAFTING
ENGINEER
MFG
APPROVED
APPROVED
AYDIN MONITOR SYSTEMS
PORT WASHINGTON, PENNA. 11050
SCHEMATIC DIAGRAM
INPØ67-Ø
460-2051
1368-82
NEXT ASSY
USED ON
APPLICATION
SIZE D
CODE IDENT NO. 20747
SD600-0461
REV H
SCALE
SHEET 1 OF 4

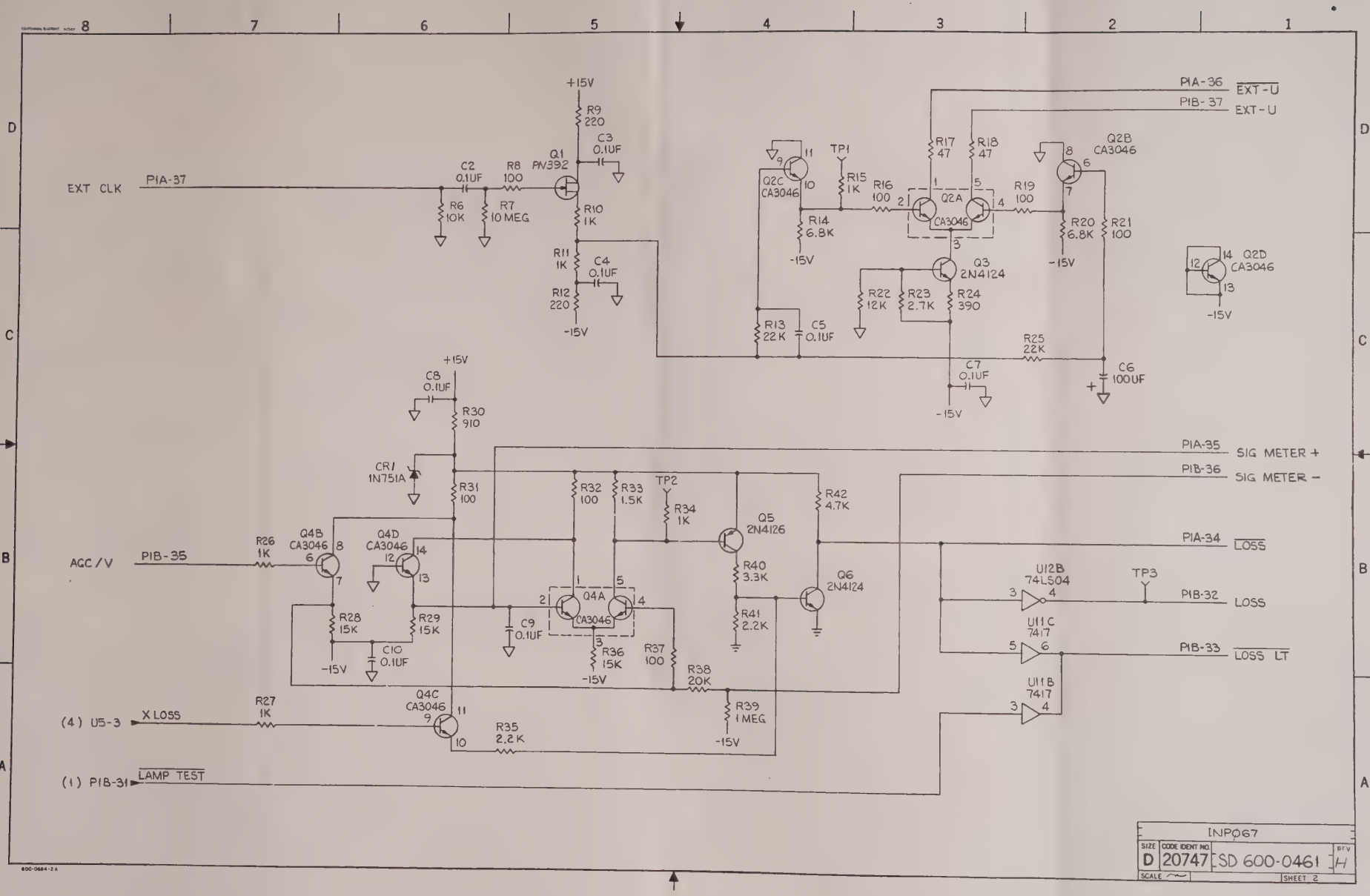
+15V
R9 220
C3 0.1UF
Q1 PN392
C2 0.1UF
R8 100
EXT CLK
PIA-37
R6 10K
R7 10 MEG
R10 1K
R11 1K
C4 0.1UF
R12 220
-15V
PIA-36 EXT-U
PIB-37 EXT-U
TP1
R15 1K
R16 100
R17 47
R18 47
Q2B CA3046
Q2C CA3046
Q2A CA3046
R19 100
R14 6.8K
R20 6.8K
R21 100
Q3 2N4124
R22 12K
R23 2.7K
R24 390
R13 22K
C5 0.1UF
R25 22K
C7 0.1UF
C6 100UF
Q2D CA3046
+15V
C8 0.1UF
R30 910
CR1 1N751A
R31 100
PIA-35 SIG METER +
PIB-36 SIG METER -
R32 100
R33 1.5K
TP2
R34 1K
Q5 2N4126
R42 4.7K
AGC/V
PIB-35
R26 1K
Q4B CA3046
Q4D CA3046
PIA-34 LOSS
U12B 74LS04
TP3
PIB-32 LOSS
Q4A CA3046
R40 3.3K
Q6 2N4124
R41 2.2K
R28 15K
R29 15K
C9 0.1UF
C10 0.1UF
R36 15K
R37 100
U11C 7417
PIB-33 LOSS LT
R38 20K
U11B 7417
R27 1K
Q4C CA3046
R39 1 MEG
(4) U5-3
X LOSS
R35 2.2K
(1) P1B-31
LAMP TEST
INP067
SIZE D
CODE IDENT NO. 20747
SD 600-0461
REV H
SCALE
SHEET 2

NOTICE TO PERSONS RECEIVING THIS DOCUMENT: THIS DOCUMENT IS THE EXCLUSIVE PROPERTY OF AYDIN CORPORATION. CONTAINS PROPRIETARY AND PRIVATE INFORMATION OF THE COMPANY, AND IS DELIVERED ON THE EXPRESS CONDITION THAT IT IS NOT TO BE DISCLOSED OR REPRODUCED (IN WHOLE OR IN PART) NOR USED FOR MANUFACTURE BY ANYONE OTHER THAN THE AYDIN CORPORATION, AND FURTHER NO RIGHT IS GRANTED TO DISCLOSE OR SO USE ANY INFORMATION CONTAINED IN THIS DOCUMENT

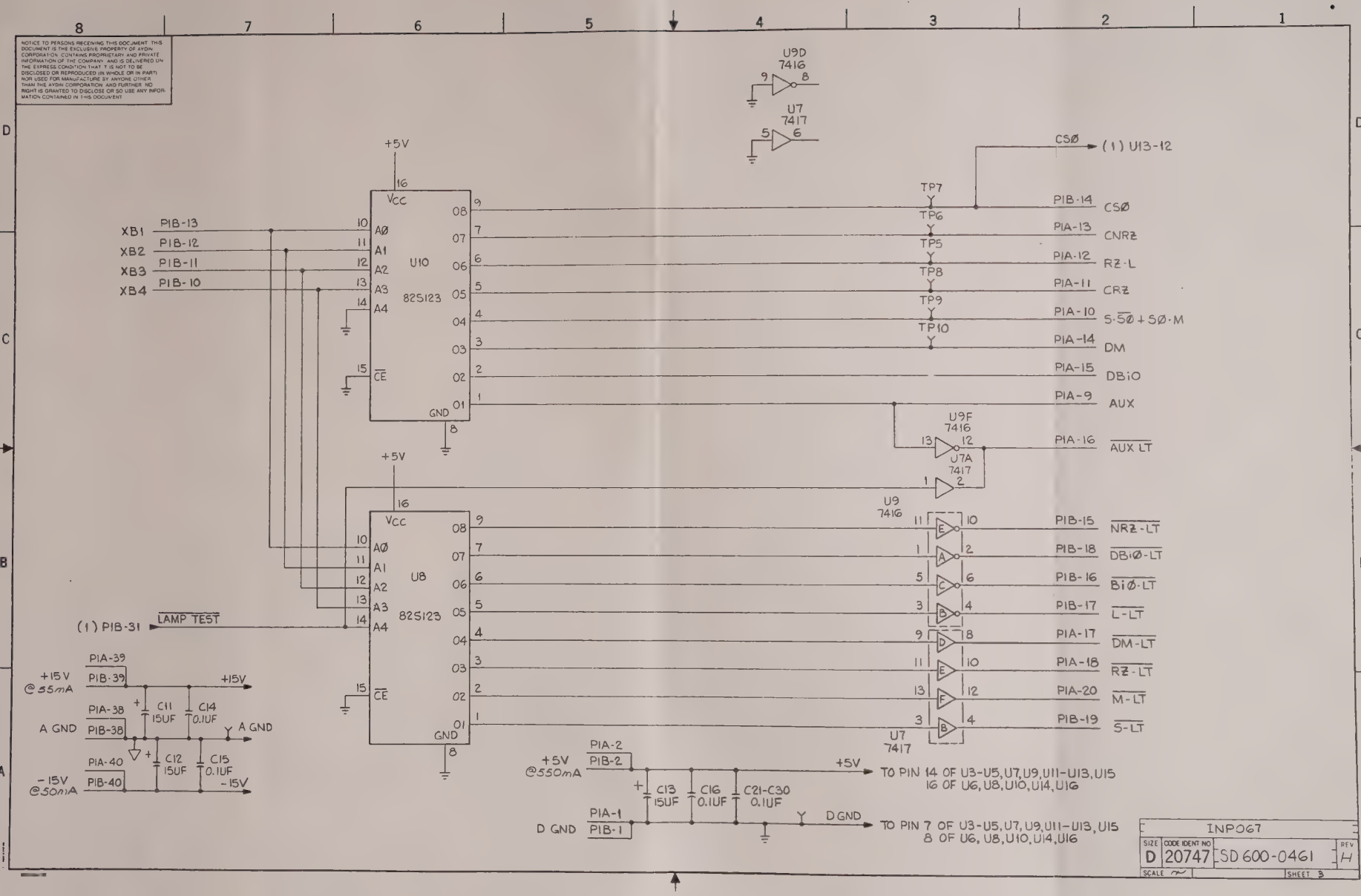

INP067			
SIZE D	CODE IDENT NO 20747	SD 600-0461	REV H
SCALE ~		SHEET 3	

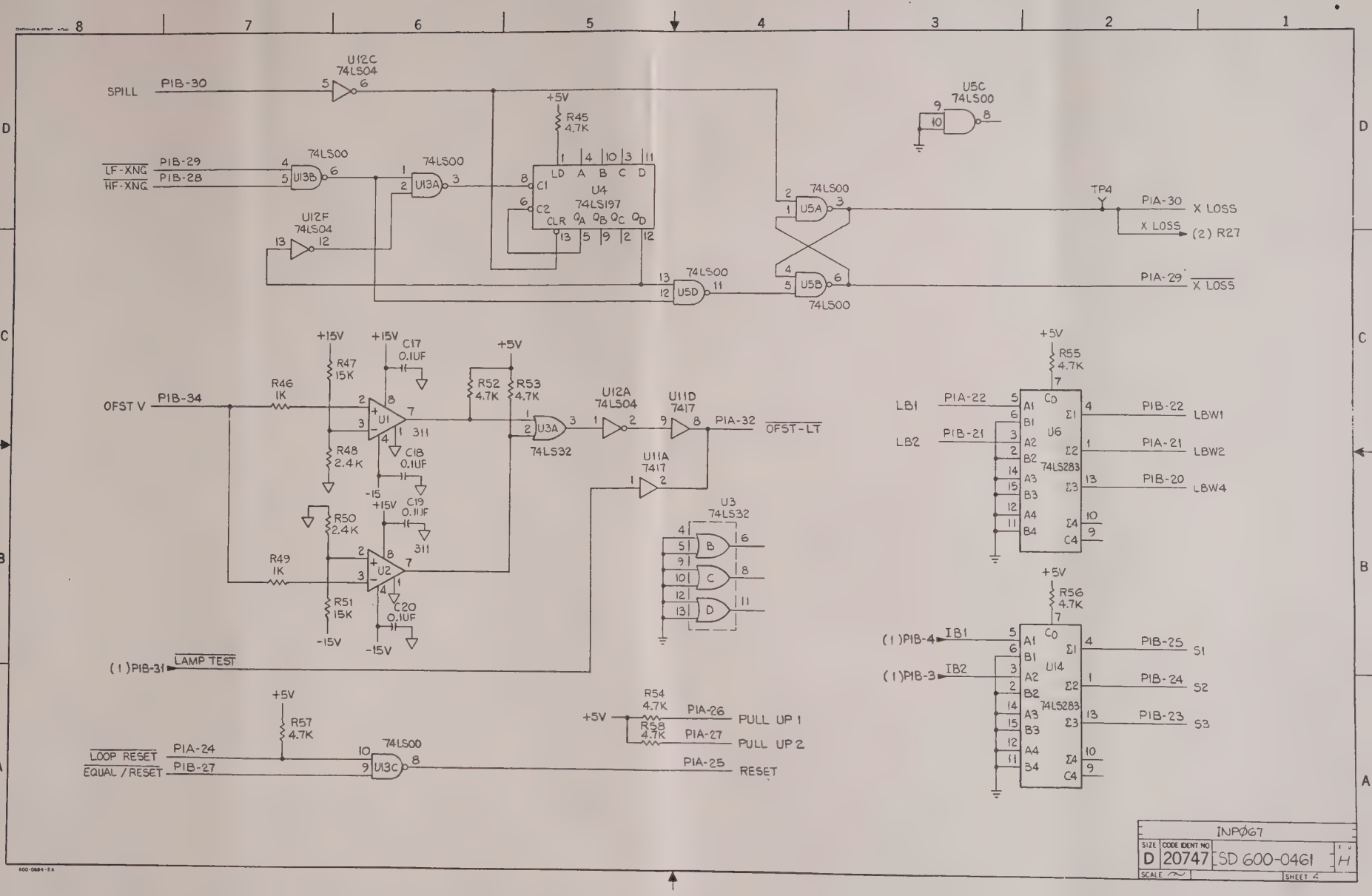

INPØG7

SIZE	CODE IDENT NO		
D	20747	SD 600-0461	H

SCALE ~ SHEET 4

ZONE	LTR	REVISIONS DESCRIPTION	DATE	APPROVED
	B	REVISED PER ECO 14404 & 4405	[illegible]	[illegible]
	C	REVISED PER ECO 15607 & 15670	[illegible]	[illegible]

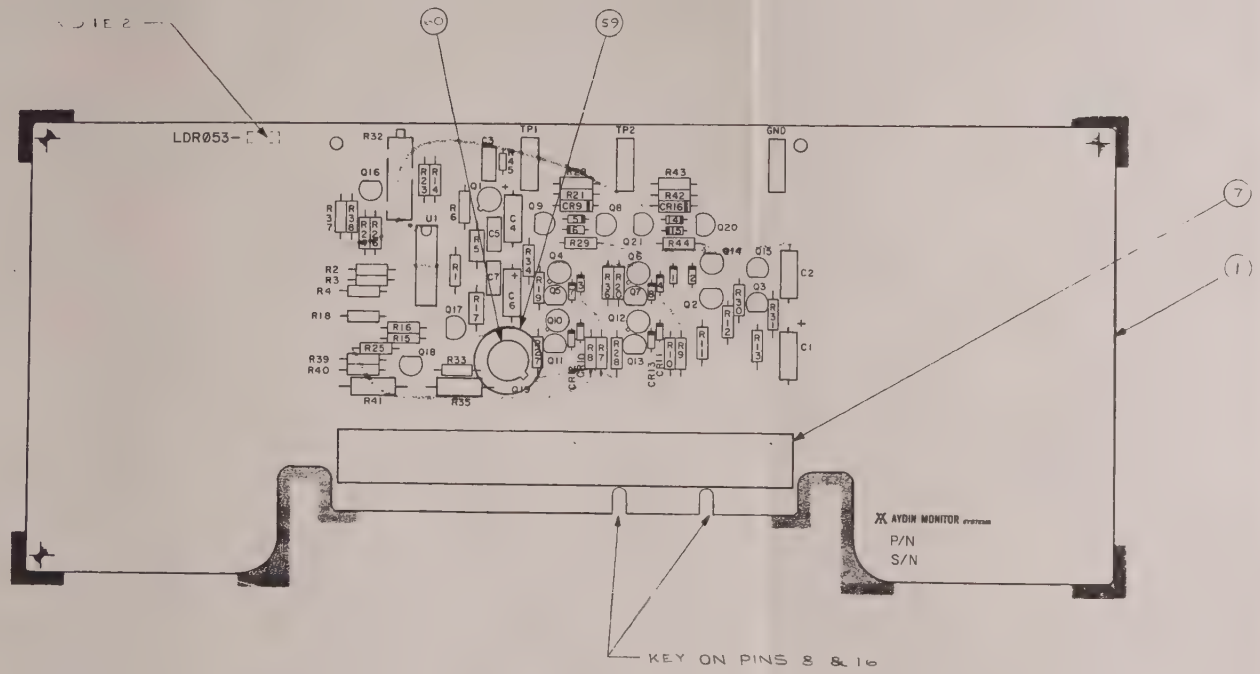

NOTES
1. FOR GENERAL MANUFACTURING AND ENGINEERING NOTES SEE DRAWING NO. A) 401-0010.
2. MARK COMPLETE TYPE NUMBER WHERE SHOWN.
3. MAXIMUM COMPONENT PROFILE IS .437

FOR SCHEMATIC SEE SD600-0468 (C SIZE)
FOR PARTS LIST SEE PL460-2058-▭

DRAWN J. DOERR DATE 8-27-86	AYDIN MONITOR SYSTEMS PORT WASHINGTON, PENNA. 18024
CHECKED ES	
DRAFTING [illegible]	CARD ASSEMBLY LINE DRIVER LDRØ53-1-2
ENGINEER [illegible]	
MFG WM REINHART 9-5-86	
APPROVED [illegible]	SIZE D · CODE IDENT NO. 20747 · AD460-2058-501 -502 · REV C C
APPROVED	SCALE 2/1 · SHEET

NEXT ASSY	USED ON
	1368-82
APPLICATION	

REVISIONS

REV	DESCRIPTION	EFFECTIVE ON S/N	DATE	APPROVED
B	REVISED PER ECO 14404 WJW 4-14-87		4/23/87	
C	REVISED PER ECO 15700		12-9-87	
C1	ADDED - R27, R28 REF DESG.		2/1/88	

SHEET	1	2	3	4	5	6	7	8	9	10	11	12	13	14	15	16	17	18	19	20	21	22	23
REVISION	+	+	+																				

AYDIN MONITOR SYSTEMS
FORT WASHINGTON, PENNA. 18034

TITLE PARTS LIST
CARD ASSEMBLY
LDR053-1

CODE IDENT 20747
CONTRACT NO. 1368-82

DRAWN	W. BARONOFSKY	8-15-86	ENGINEER			DWG NO.	PL460-2058-501	REV C1
CHECKED			APPROVED	J. [illegible]	1-5-88			
DRAFTING		2-3-88				SHEET 1 OF 1		

800-0066

ASSEMBLY: 460-2058-501 REV: C1

QPA	ITEM	MONITOR #	MFG PART NBR	DESCRIPTION	REF.DES
		460-2058-501		PARENT CARD ASSY LD R053-1	
1	001	400-1952	400-1952	PWB LDR053	
1	007	108-203-041	7022-041-000001	CONN FING BLOC 41 POS	
1	011	102-313-685	150D685X0006A2	CAP 6.8UF 6V 20%	C1
1	012	102-001-473	230B1B473	CAP .047UF 100V 20%	C2
3	013	102-419-104	CK06BX104M	CAP .1UF 100V 20%	C3
					C5
					C7
2	014	102-305-225	150D225X0020A2	CAP 2.2UF 20V 20%	C4
					C6
14	018	104-503-014	1N4531	DIODE SIG MINIATURE	CR1
					CR2
					CR3
					CR4
					CR5
					CR6
					CR7
					CR8
					CR10
					CR11
					CR12
					CR13
					CR14
					CR15
2	019	104-056-105	1N753A	DIODE ZENER CASE 51	CR1
					CR16
1	023	103-019-001	2N2222	TRANS SIL NPN TO-18	Q1
7	024	103-304-001	2N4126	TRANS SIL PNP TO-92	Q2
					Q3
					Q14
					Q15
					Q16
					Q17
					Q18
4	025	103-065-001	2N2369	TRAN SIL NPN TO-18	Q4
					Q6
					Q10
					Q12
8	026	103-408-001	2N4124	TRANS SIL NPN TO-92	Q5
					Q7
					Q8
					Q9
					Q11
					Q13
					Q20
					Q21
1	028	103-314-202	2N2905	TRANS SIL PNP TO-5	Q19
6	032	100-037-101	CCF-07-101-J	MTFLM 100 OHM .25W 5%	R1
					R3
					R13
					R31
					R38
					R40
2	033	100-037-562	CCF-07-562-J	MTFLM 5.6K .25W 5%	R3
					R39

*** SINGLE LEVEL BILL - BY ITEM ***

ASSEMBLY: 460-2058-501 REV: C1

QPA	ITEM	MONITOR #	MFG PART NBR	DESCRIPTION	REF. DES
2	034	100-037-822	CCF-07-822-J	MTFLM 8.2K .25W 5%	R4
2	035	100-003-8R2	RC07GF8R2J	RES 8.2 OHMS 1/4W 5%	R25 R19 R20
2	036	100-215-4991	RN55D4991F	RES 4.99K 1/8W 1%	R5 R17
2	037	100-037-220	CCF-07-220-J	MTFLM 22 OHM .25W 5%	R6 R33
2	038	100-037-202	CCF-07-202-J	MTFLM 2K .25W 5%	R7 R9
2	039	100-037-272	CCF-07-272-J	MTFLM 2.7K .25W 5%	R8 R10
1	040	100-037-103	CCF-07-103-J	MTFLM 10K .25W 5%	R11
2	041	100-037-132	CCF-07-132-J	MTFLM 1.3K .25W 5%	R12 R30
1	042	100-037-242	CCF-07-242-J	MTFLM 2.4K .25W 5%	R14
2	043	100-037-470	CCF-07-470-J	MTFLM 47 OHM .25W 5%	R15 R16
1	044	100-037-362	CCF-07-362-J	MTFLM 3.6K .25W 5%	R18
2	045	100-037-471	CCF-07-471-J	MTFLM 470 OHM .25W 5%	R21 R42
2	046	100-037-122	CCF-07-122-J	MTFLM 1.2K .25W 5%	R22 R43
2	047	100-037-221	CCF-07-221-J	MTFLM 220 OHM .25W 5%	R23 R26
1	048	100-037-432	CCF-07-432-J	MTFLM 4.3K .25W 5%	R24
2	049	100-003-7R5	RC07GF7R5J	RES 7.5 OHMS 1/4W 5%	R27 R28
4	050	100-037-102	CCF-07-102-J	MTFLM 1K .25W 5%	R29 R34 R36 R44
2	051	100-039-240	SMA-20-24R0-5%	MTFLM 24 OHM .5W 5%	R35 R41
1	052	100-037-392	CCF-07-392-J	MTFLM 3.9K .25W 5%	R37
1	053	101-115-102	3006-W-102	POT 1K .75W 10%	R32
1	057	139-209-002	CA3046	TRANS ARRAY	U1
1	059	116-002-003	TXBF-032-025B	HEAT SINK TRANS TO-5	
1	060	131-021-001	10076	PAD TRANS TO5 3PIN	
5	061	131-013-001	10047	PAD TRANS TO 18 4 PIN	Q1 Q4 Q6 Q10 Q12
2	063	121-202-005	SPCJ-200-05	TEST POINT PC GRN	TP1 TP2
1	064	121-202-010	SPCJ-200-03	TEST POINT PC BLK	GND
		AD460-2058-501	ASSEMBLY DRAWIN	LDR053-1	
		SD600-0468	SCHEMATIC DIAGR	LDR053	
		AT297-1100	ACCEPTANCE TEST	LDR053 TEST PROC	

ASSEMBLY: 460-2058-501 REV: C1

QPA	ITEM	MONITOR #	MFG PART NBR	DESCRIPTION	REF.DES
2	034	100-037-822	CCF-07-822-J	MTFLM 8.2K .25W 5%	R4
					R25
2	035	100-003-8R2	RC07GF8R2J	RES 8.2 OHMS 1/4W 5%	R19
					R20
2	036	100-215-4991	RN55D4991F	RES 4.99K 1/8W 1%	R5
					R17
2	037	100-037-220	CCF-07-220-J	MTFLM 22 OHM .25W 5%	R6
					R33
2	038	100-037-202	CCF-07-202-J	MTFLM 2K .25W 5%	R7
					R9
2	039	100-037-272	CCF-07-272-J	MTFLM 2.7K .25W 5%	R8
					R10
1	040	100-037-103	CCF-07-103-J	MTFLM 10K .25W 5%	R11
2	041	100-037-132	CCF-07-132-J	MTFLM 1.3K .25W 5%	R12
					R30
1	042	100-037-242	CCF-07-242-J	MTFLM 2.4K .25W 5%	R14
2	043	100-037-470	CCF-07-470-J	MTFLM 47 OHM .25W 5%	R15
					R16
1	044	100-037-362	CCF-07-362-J	MTFLM 3.6K .25W 5%	R18
2	045	100-037-471	CCF-07-471-J	MTFLM 470 OHM .25W 5%	R21
					R42
2	046	100-037-122	CCF-07-122-J	MTFLM 1.2K .25W 5%	R22
					R43
2	047	100-037-221	CCF-07-221-J	MTFLM 220 OHM .25W 5%	R23
					R26
1	048	100-037-432	CCF-07-432-J	MTFLM 4.3K .25W 5%	R24
2	049	100-003-7R5	RC07GF7R5J	RES 7.5 OHMS 1/4W 5%	R27
					R28
4	050	100-037-102	CCF-07-102-J	MTFLM 1K .25W 5%	R29
					R34
					R38
					R44
2	051	100-039-240	SMA-20-24R0-5%	MTFLM 24 OHM .5W 5%	R35
					R41
1	052	100-037-392	CCF-07-392-J	MTFLM 3.9K .25W 5%	R37
1	053	101-115-102	3006-W-102	POT 1K .75W 10%	R32
1	057	139-209-002	CA3046	TRANS ARRAY	U1
1	059	116-002-003	TXBF-032-025B	HEAT SINK TRANS TO-5	
1	060	131-021-001	10076	PAD TRANS TO5 3PIN	
5	061	131-013-001	10047	PAD TRANS TO 18 4 PIN	Q1
					Q4
					Q6
					Q10
					Q12
2	063	121-202-005	SPCJ-200-05	TEST POINT PC GRN	TP1
					TP2
1	064	121-202-010	SPCJ-200-03	TEST POINT PC BLK	GND
		AD460-2058-501	ASSEMBLY DRAWIN	LDR053-1	
		SD600-0468	SCHEMATIC DIAGR	LDR053	
		AT297-1100	ACCEPTANCE TEST	LDR053 TEST PROC	

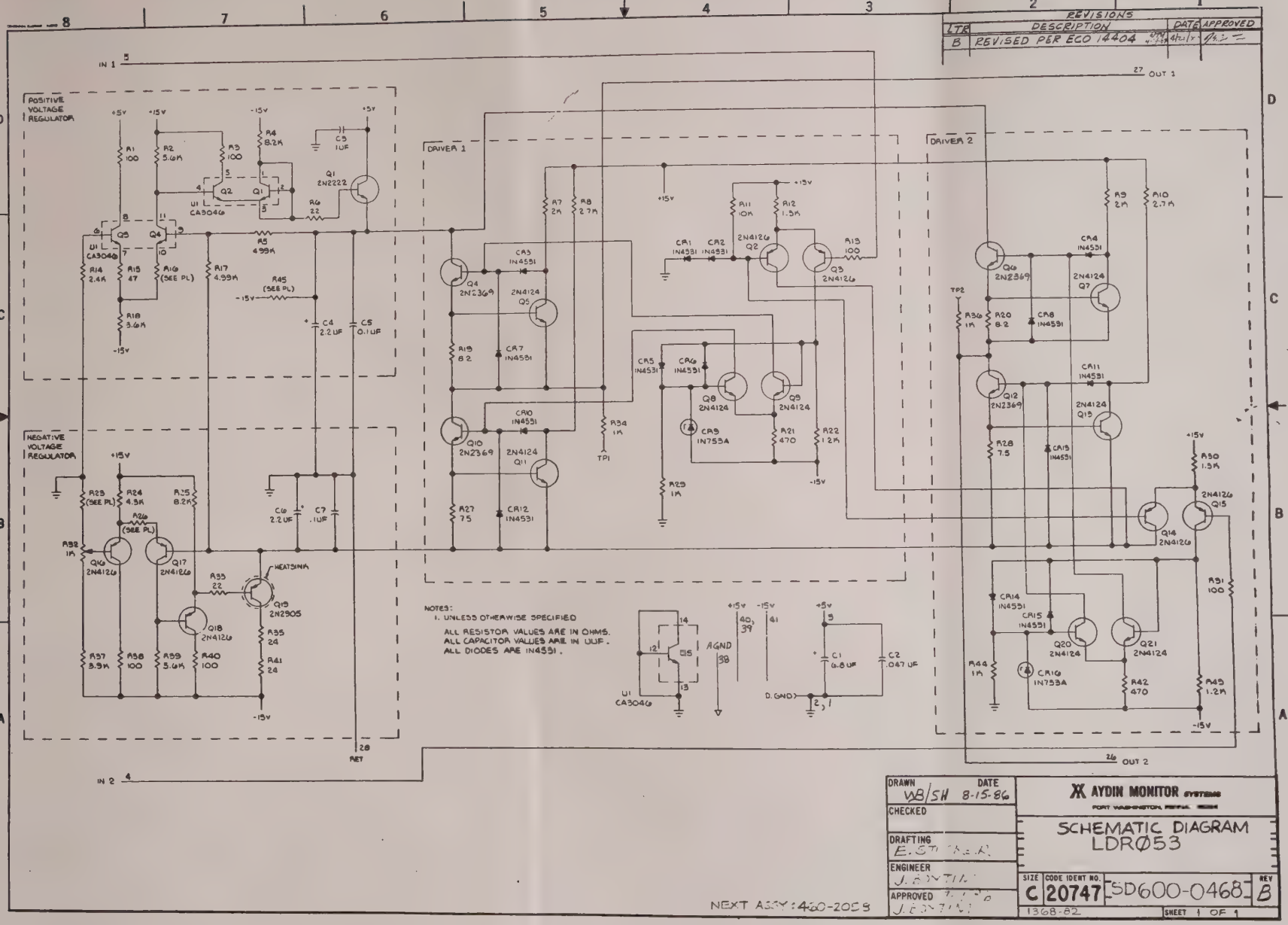
REVISIONS
LTR DESCRIPTION DATE APPROVED
B REVISED PER ECO 14404
IN 1
OUT 1
IN 2
OUT 2
POSITIVE VOLTAGE REGULATOR
NEGATIVE VOLTAGE REGULATOR
DRIVER 1
DRIVER 2
HEATSINK
NOTES:
1. UNLESS OTHERWISE SPECIFIED
ALL RESISTOR VALUES ARE IN OHMS.
ALL CAPACITOR VALUES ARE IN UUF.
ALL DIODES ARE IN4531.
AGND
D.GND
DRAWN WB/SH DATE 8-15-86
CHECKED
DRAFTING
ENGINEER
APPROVED
AYDIN MONITOR SYSTEMS
SCHEMATIC DIAGRAM
LDRØ53
SIZE C CODE IDENT NO. 20747 SD600-0468 REV B
1368-82
SHEET 1 OF 1
NEXT ASSY: 460-2058

ZONE	LTR	REVISIONS DESCRIPTION	DATE	APPROVED

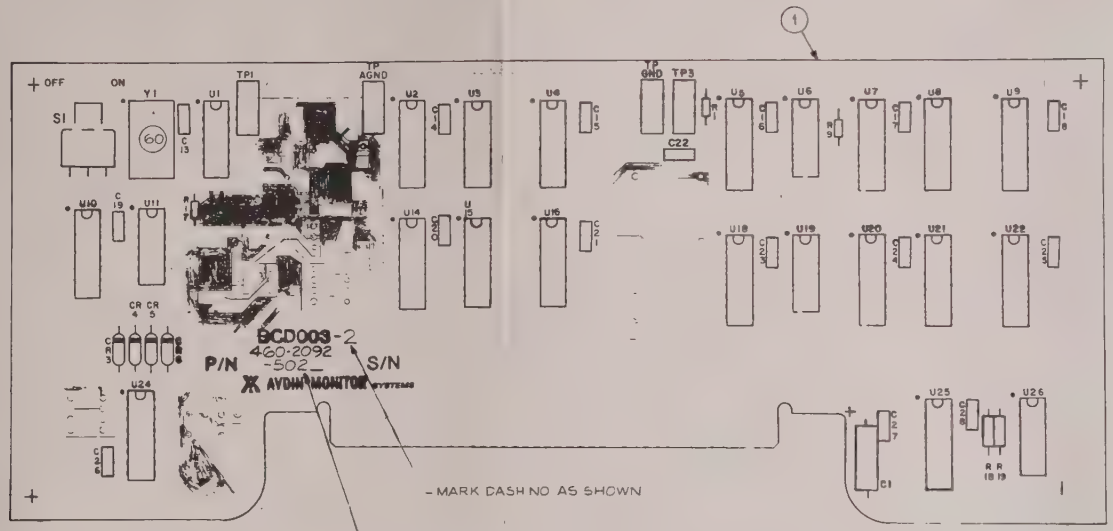

NOTES:
1. FOR GENERAL MANUFACTURING & ENGINEERING NOTES SEE DWG. NO. A) 401-0010.
2 MAXIMUM COMPONENT PROFILE IS .437.

FOR SCHEMATICS SEE SD600-0495-502
FOR PARTS LIST SEE PL 460-2092-502

DRAWN	JULY 5, 1989	AYDIN MONITOR SYSTEMS, FORT WASHINGTON, PENNA 19034
CHECKED	7-18-89	
DRAFTING	7-18-89	CARD ASSEMBLY BCDØØ3-2
ENGINEER	7-18-89	
MFG	7-19-89	
APPROVED QA	7/19/89	SIZE D / CODE IDENT NO 20747 / AD460-2092-502 / REV —
APPROVED PROGRAM	7/19/89	SCALE 2/1 / SHEET 1 OF 1
NEXT ASSY USED ON	9910-1252	
APPLICATION		

REVISIONS			
REV	DESCRIPTION	DATE	APPROVED

		CONTRACT NO.	AYDIN COMPUTER AND MONITOR Division 700 DRESHER ROAD HORSHAM, PA 19044
		DRAWN JULY 5 DATE 89	PARTS LIST BCDΦΦ3-2
		CHECKED 7-14-89	
		DRAFTING 7-13-89	
		APPROVED ENG 7-17-89	
	9910-1252	APPROVED MFG 7-19-89 / QA 7/19/89	SIZE A / CAGE CODE 20747 / DWG NO PL460-2092-502 / REV —
NEXT ASSY	USED ON	APPROVED PROGRAM 7/20/89	
APPLICATION		SCALE	SHEET 1 OF 3

800-0018E

LIST CHECK	DESIGN ACTIVITY IDENTIFICATION INTERNAL USE ONLY 09:12:39 18 JUL 1989	CONTRACT NO.	CAGE CODE 20747	PL460-2092-502	R -

LIST TITLE CARD ASSY BCD003-2	SUBCONTRACT NO.		SHEET NO. 2

FIND NO	QTY REQ	U/M	CAGE CODE	DOCUMENT NUMBER	PART OR IDENTIFYING NUMBER	NOMENCLATURE OR DESCRIPTION	NOTES
001	1	EA		400-2001	400-2001	PWB BCD003	
003	1	EA	56289	102-367-685	150D685X9035B2	CAP 6.8UF 35V 10%	C1
005	18	EA	71590	102-419-104	CK06BX104M	CAP .1UF 100V 20%	C13 C14 C15 C C17 C18 C19 C C21 C22 C23 C C25 C26 C27 C
010	4	EA	03877	104-014-001	1N914	DIODE SILICON DO-7	CR3 CR4 CR5 C
015	3	EA	91637	100-038-102	CCF-50-1001-F	MTFLM 1K .125W 5%	R1 R9 R17
026	2	EA	91637	100-037-390	CCF-07-390-J	MTFLM 39 OHM .25W 5%	R18 R19
028	1	EA	09353	107-205-001	7101MD9ABE	SW TGL SPDT	S1
030	2	EA	30035	121-202-005	SPCJ-200-05	TEST POINT PC GRN	TP1 TP3
031	1	EA	30035	121-202-009	SPCJ-200-01	TEST POINT PC WHT	TPAGND
032	1	EA	30035	121-202-010	SPCJ-200-03	TEST POINT PC BLK	TPGND
035	1	EA	01295	139-198-393	SN74LS393N	DUAL 4BIT BIN CTR 14P	U1
036	4	EA		139-598-583	74F583PC	4 BT BCD ADDER 16 PN	U2 U9 U14 U22
037	8	EA	01295	139-198-157	SN74LS157N	2-1DSEL/MUX MINV 16P	U3 U4 U7 U8 U U16 U20 U21
039	2	EA	01295	139-198-485	SN74LS85N	4BIT MAG COM 16P	U5 U18
040	2	EA	01295	139-198-495	SN74LS95BN	4 BIT SHIFT REG 14PN	U6 U19
042	1	EA	01295	139-198-390	SN74LS390N	DUAL DEC CTR 16P	U10
043	1	EA	01295	139-198-492	SN74LS92N	IC TTL 14 PIN	U11
050	1	EA	01295	139-198-283	SN74LS283N	4BIT BIN ADDR 16P	U24
054	1	EA	01295	139-198-366	SN74LS366AN	HEX BUS DRV 35 INV16P	U25
055	1	EA	01295	139-198-408	SN74LS08N	QUAD 2IN PAND 14P	U26
058	1	EA	01537	133-027-023	M1245-15.360MHZ	CRYSTAL OSC 15.360MHZ	Y1
060	1	EA	32559	131-053-001	814-030	MOUNT DIL 14 PIN	

LIST CHECK	DESIGN ACTIVITY IDENTIFICATION INTERNAL USE ONLY 09:14:37 18 JUL 1989	CONTRACT NO.	CAGE CODE 20747	PL460-2092-502	REV -

LIST TITLE CARD ASSY BCD003-2	SUBCONTRACT NO.		SHEET NO. 3

FIND NO	QTY REQ	U/M	CAGE CODE	DOCUMENT NUMBER	PART OR IDENTIFYING NUMBER	NOMENCLATURE OR DESCRIPTION	NOTES
				AT 297-1177		ACCEPTANCE TEST PROCEDURE - BCD003 CHKOUT PROCDR	
				AD 460-2092-502		ASSEMBLY DRAWING - BCD003-2	
				SD 600-0495-502		SCHEMATIC DIAGRAM - BCD003-2	

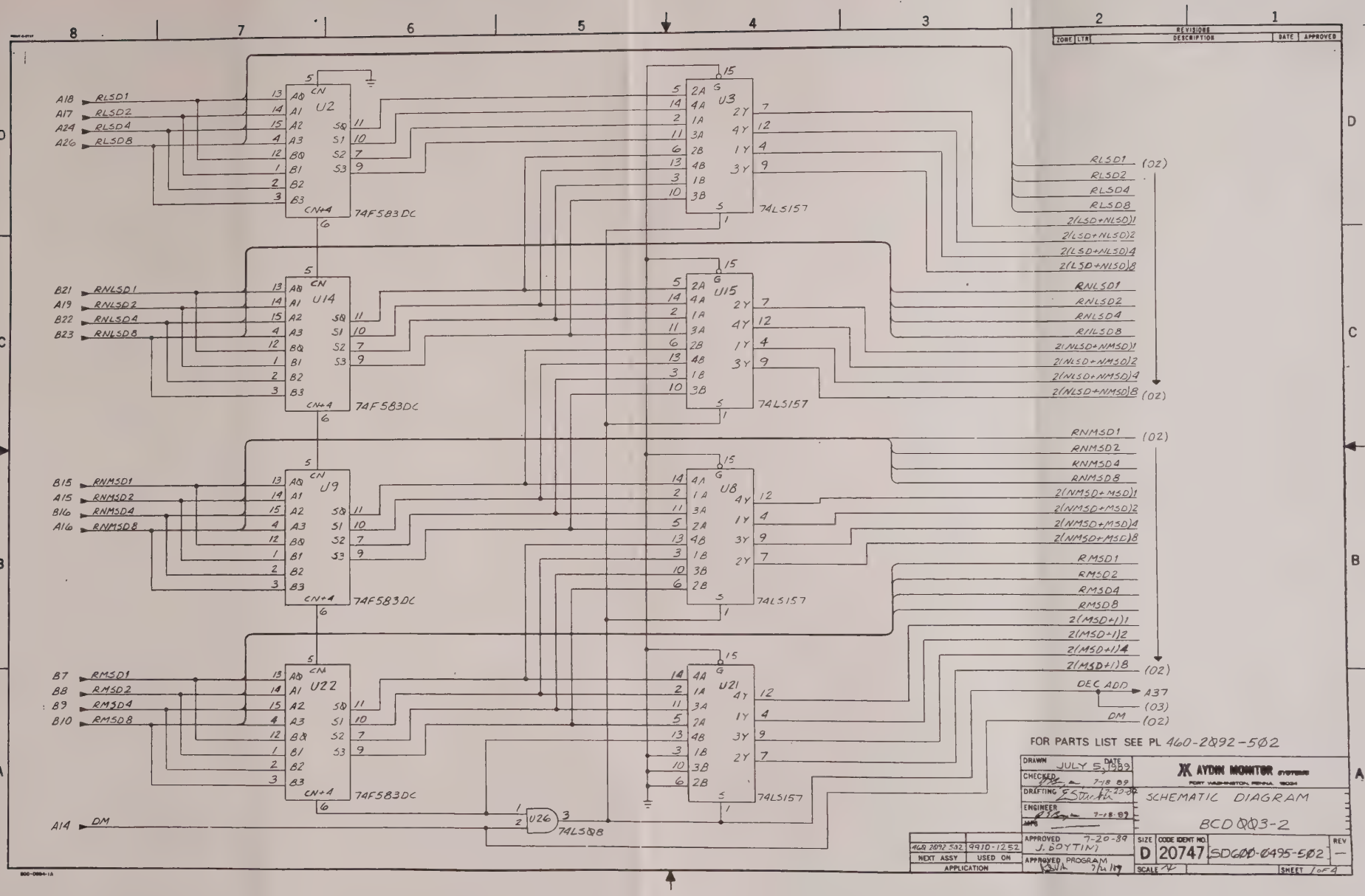
ZONE LTR REVISIONS DESCRIPTION DATE APPROVED
A1B RLSD1
A17 RLSD2
A24 RLSD4
A26 RLSD8
U2
74F583DC
U3
74LS157
B21 RNLSD1
A19 RNLSD2
B22 RNLSD4
B23 RNLSD8
U14
74F583DC
U15
74LS157
B15 RNMSD1
A15 RNMSD2
B16 RNMSD4
A16 RNMSD8
U9
74F583DC
U8
74LS157
B7 RMSD1
B8 RMSD2
B9 RMSD4
B10 RMSD8
U22
74F583DC
U21
74LS157
A14 DM
U26
74LS08
RLSD1 (02)
RLSD2
RLSD4
RLSD8
2(LSD+NLSD)1
2(LSD+NLSD)2
2(LSD+NLSD)4
2(LSD+NLSD)8
RNLSD1
RNLSD2
RNLSD4
RNLSD8
2(NLSD+NMSD)1
2(NLSD+NMSD)2
2(NLSD+NMSD)4
2(NLSD+NMSD)8 (02)
RNMSD1 (02)
RNMSD2
RNMSD4
RNMSD8
2(NMSD+MSD)1
2(NMSD+MSD)2
2(NMSD+MSD)4
2(NMSD+MSD)8
RMSD1
RMSD2
RMSD4
RMSD8
2(MSD+1)1
2(MSD+1)2
2(MSD+1)4
2(MSD+1)8 (02)
DEC ADD A37
(03)
DM (02)
FOR PARTS LIST SEE PL 460-2092-502
DRAWN JULY 5, 1989
CHECKED 7-18-89
DRAFTING 7-18-89
ENGINEER 7-18-89
APPROVED 7-20-89 J. BOYTIN
APPROVED PROGRAM 7/21/89
AYDIN MONITOR SYSTEMS
FORT WASHINGTON, PENNA. 19034
SCHEMATIC DIAGRAM
BCD 003-2
460 2092 502
9910-1252
NEXT ASSY
USED ON
APPLICATION
SIZE D
CODE IDENT NO. 20747
SD600-0495-502
REV —
SCALE NONE
SHEET 1 OF 4

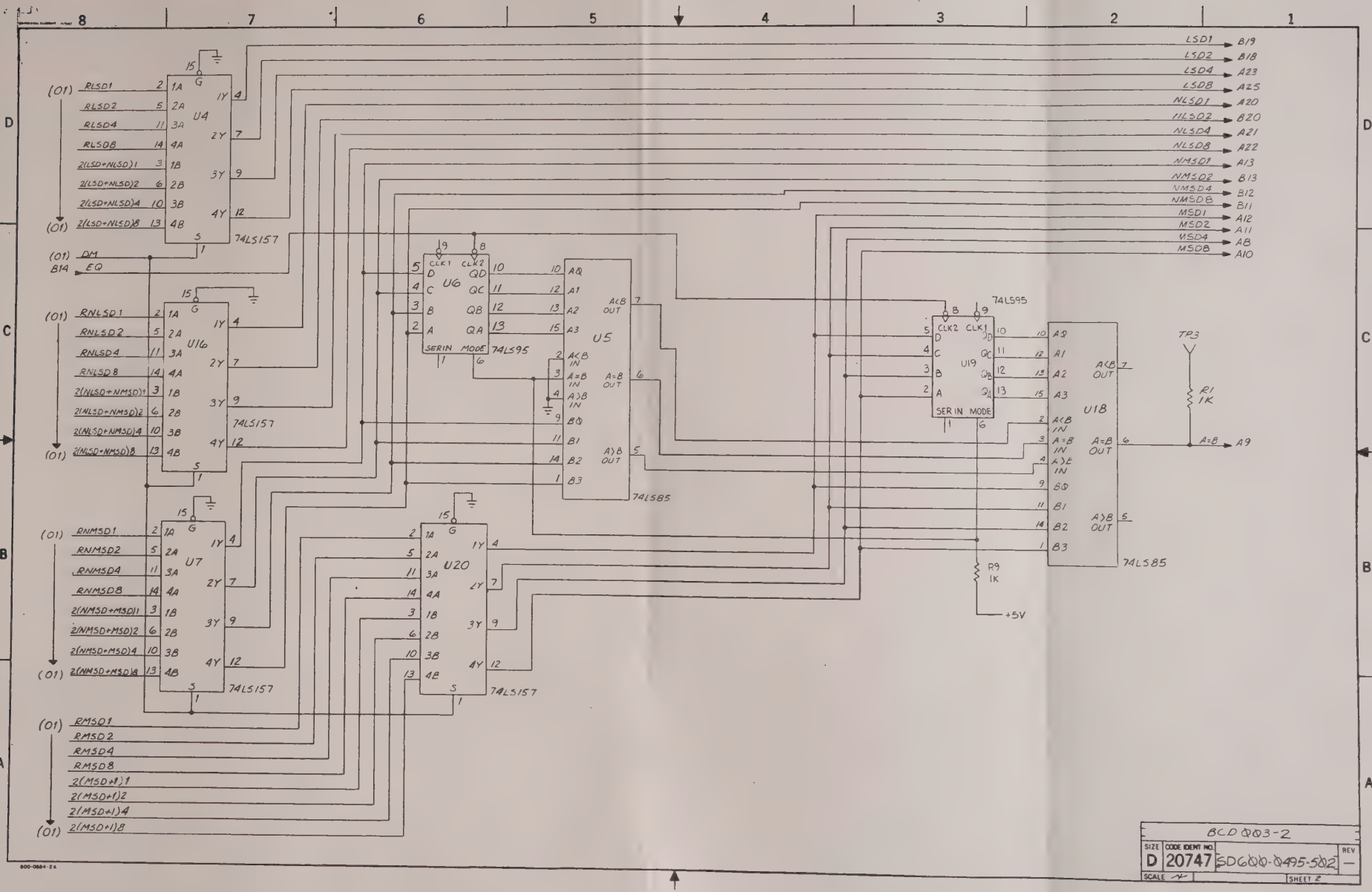

BCD 003-2

SIZE	CODE IDENT NO.		REV
D	20747	SD600-0495-502	—
SCALE		SHEET 2	

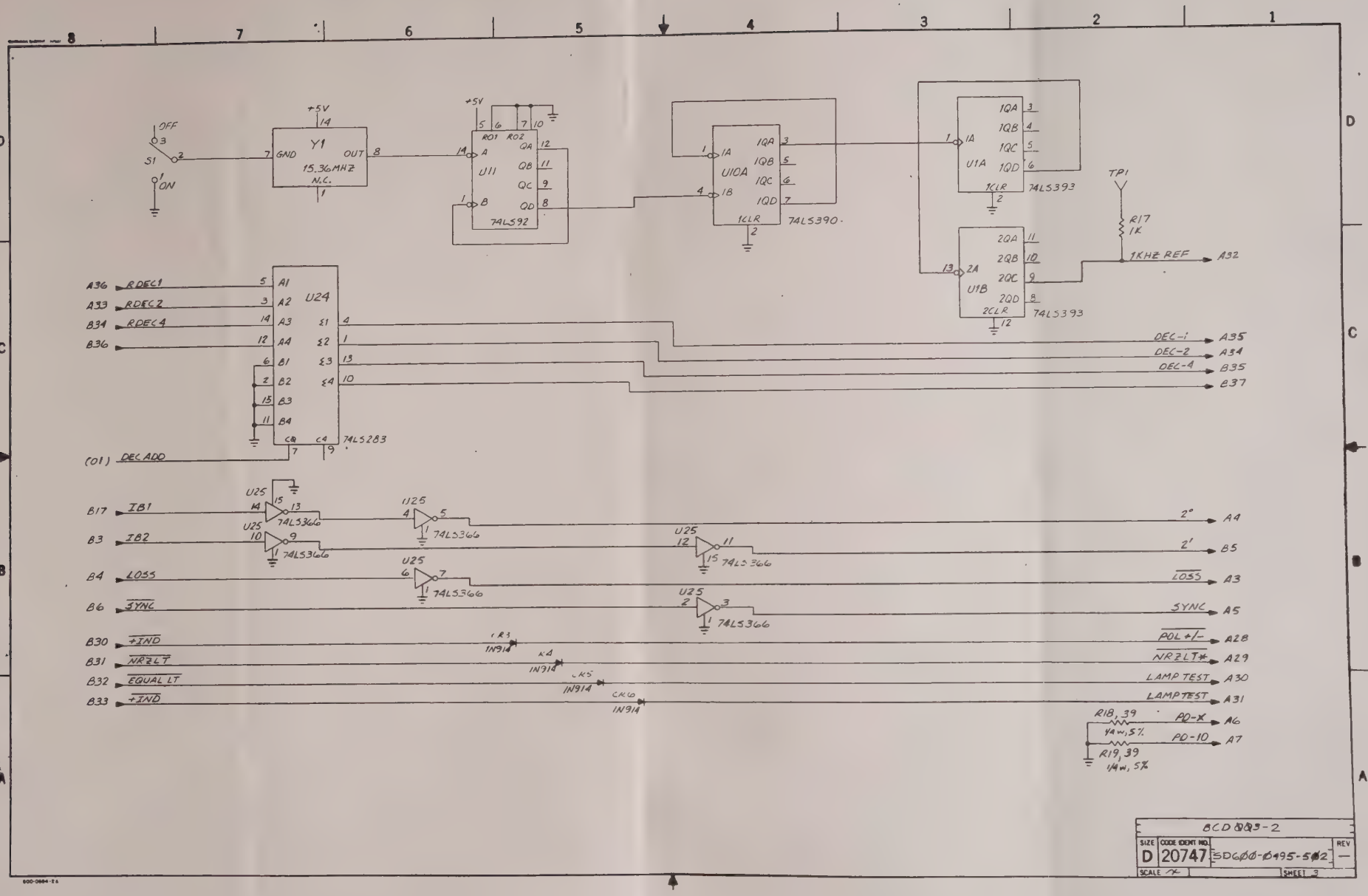

OFF
S1
ON
+5V
Y1
15.36MHZ
N.C.
GND
OUT
U11
74LS92
RO1
RO2
U10A
74LS390
U1A
74LS393
U1B
74LS393
TP1
R17
1K
1KHZ REF
A32
U24
74LS283
A36 RDEC1
A33 RDEC2
B34 RDEC4
B36
(01) DEC ADD
DEC-1 A35
DEC-2 A34
DEC-4 B35
B37
U25
74LS366
B17 IB1
B3 IB2
B4 LOSS
B6 SYNC
B30 +IND
B31 NRZLT
B32 EQUAL LT
B33 +IND
2° A4
2' B5
LOSS A3
SYNC A5
POL +/- A28
NRZLT* A29
LAMP TEST A30
LAMP TEST A31
R18, 39
1/4w, 5%
R19, 39
1/4w, 5%
PD-X A6
PD-10 A7
BCD 003-2
SIZE D
CODE IDENT NO. 20747
SD600-0495-502
REV —
SCALE
SHEET 3

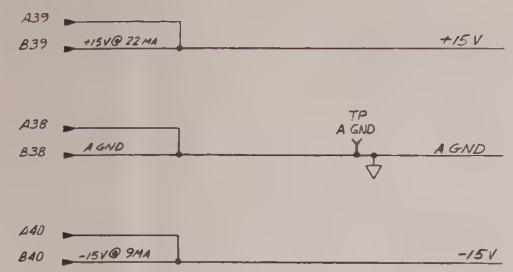

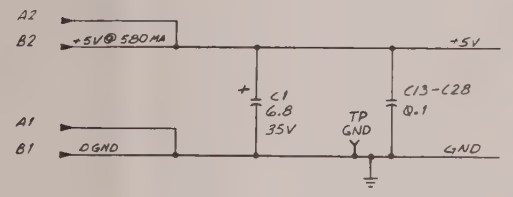

TO PIN 14 OF U1, U6, U19, U26, Y1
TO PIN 16 OF U2, U3, U4, U5, U7, U8, U9, U10, U14, U15, U16, U18, U20, U21, U22, U24, U25
TO PIN 5 OF U11

TO PIN 8 OF U23

TO PIN 7 OF U1, U6, U19, U26
TO PIN 8 OF U2, U3, U4, U5, U7, U8, U9, U10, U14, U15, U16, U18, U20, U21, U22, U24, U25
TO PIN 10 OF U11

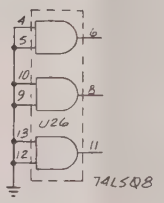

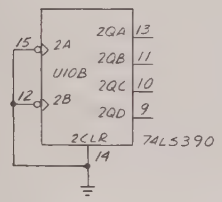

SPARES

NOTES:
1. UNLESS OTHERWISE SPECIFIED,
ALL CAPACITOR VALUES ARE IN MICROFARADS.
ALL RESISTOR VALUES ARE IN OHMS, 1/8W, 5%.

BCD003-2			
SIZE D	CODE IDENT NO. 20747	SDG00-0495-502	REV —
SCALE		SHEET 4	

NOTICE TO PERSONS RECEIVING THIS DOCUMENT THIS DOCUMENT IS THE EXCLUSIVE PROPERTY OF AYDIN CORPORATION CONTAINS PROPRIETARY AND PRIVATE INFORMATION OF THE COMPANY AND IS DELIVERED ON THE EXPRESS CONDITION THAT IT IS NOT TO BE DISCLOSED OR REPRODUCED (IN WHOLE OR IN PART) NOR USED FOR MANUFACTURE BY ANYONE OTHER THAN THE AYDIN CORPORATION AND FURTHER NO RIGHT IS GRANTED TO DISCLOSE OR SO USE ANY INFORMATION CONTAINED IN THIS DOCUMENT

REVISIONS				
ZONE	LTR	DESCRIPTION	DATE	APPROVED
	B	REVISED PER ECO 16262	5/09/88	[illegible]
	B1	REVISED PER ECO 20626 DP	11/4/88	[illegible]
	B2	REVISED PER ECO 21542 TN	4/29/91	D. Dunlap II

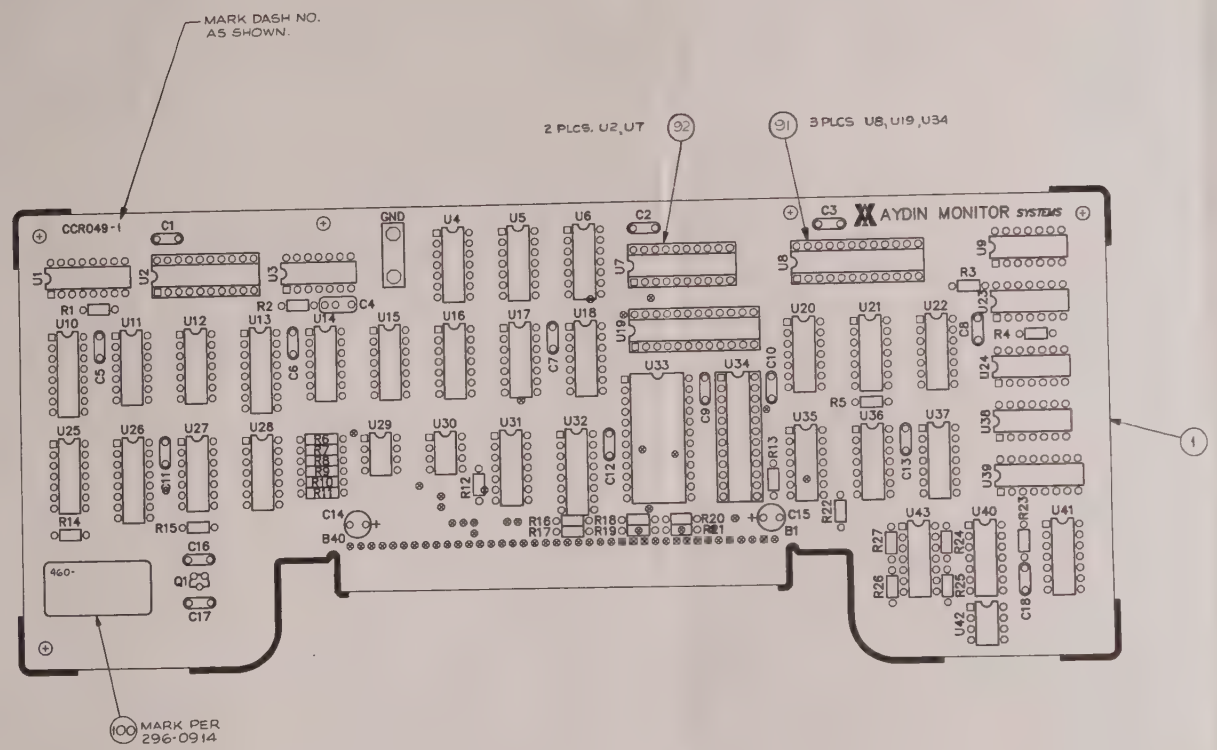

NOTES:

1. FOR GENERAL MANUFACTURING & ENGINEERING NOTES SEE DWG. NO. A)401-0010.
2. MAXIMUM COMPONENT PROFILE IS .437

FOR PARTS LIST SEE PL 460-2134-501

DRAWN G KALAMON	DATE 1-5-88
CHECKED R BROWN	
DRAFTING E. STUCKER	1-6-88
ENGINEER ROGER A. BROWN	1-5-88
MFG WM REINHART	1-6-88
APPROVED R S VOLZ	1-5-88
APPROVED	

AYDIN MONITOR SYSTEMS
FORT WASHINGTON, PENNA. 19034

CARD ASSEMBLY
CCRØ49-1

NEXT ASSY	USED ON
	1133-90
APPLICATION	

SIZE	CODE IDENT NO.		REV
D	20747	AD460-2134-501	B2
SCALE 2/1		SHEET 1 OF 1	

REVISIONS

REV	DESCRIPTION	EFFECTIVE ON S/N	DATE	APPROVED
B	REVISED PER ECO 16062		3/15/88	R Brown
C	REVISED PER ECO 16353		4/7/88	R Brown
D	REVISED PER ECO 20785		11-26-90	Halladin
E	REVISED PER ECO 22938		3/4/92	R BROWN

SHEET	1	2	3	4	5	6	7	8	9	10	11	12	13	14	15	16	17	18	19	20	21	22	23
REVISION	—																						

AYDIN MONITOR SYSTEMS
FORT WASHINGTON, PENNA. 19034

TITLE PARTS LIST
CCRØ49-1

CODE IDENT 20747
CONTRACT NO. 1133-90

DRAWN	S. HORDESKI	12/31/87	ENGINEER	Roger A Brown	1/5/88	DWG NO. PL460-2134-501	REV E
CHECKED	R. BROWN		APPROVED	RSVd2	1/5/88		
DRAFTING	E Stucker	1-6-88				SHEET 1 OF 3	

800-0066

PARTS LIST	DESIGN ACTIVITY IDENTIFICATION AYDIN COMPUTER AND MONITOR DIVISION HORSHAM, PA. 19044	CONTRACT NO.	CAGE CODE 20747	PL460-2134-501	REV E

LIST TITLE	SUBCONTRACT NO.		SHEET NO.
CARD ASSY CCR049-1			2

FIND NO	QTY REQ	U/M	CAGE CODE	DOCUMENT NUMBER	PART OR IDENTIFYING NUMBER	NOMENCLATURE OR DESCRIPTION	NOTES
001	1	EA		400-2022	400-2022	PWB CCR049	
003	2	EA	56289	102-623-001	196D156X9020KA1	TANT DP 15UF 20V 10%	C14 C15
005	15	EA	71590	102-419-104	CK06BX104M	CAP .1UF 100V 20%	C1 C2 C3 C5 C6 C7 C8 C9 C10 C11 C12 C13 C16 C17 C18
008	1	EA	84171	102-101-471	DM15471J	MICA 470 PF 500V 5%	C4
018	1	EA	27014	139-572-001	LM79L05ACZ	VOLTAGE REG TO-92	Q1
020	6	EA	91637	100-037-750	CCF-07-750-J	MTFLM 75 OHM .25W 5%	R6 R7 R8 R9 R10 R11
024	1	EA	91637	100-038-201	CCF-50-2000-F	MTFLM 200 OHM.125W 5%	R2
026	16	EA	91637	100-038-102	CCF-50-1001-F	MTFLM 1K .125W 5%	R1 R3 R4 R5 R12 R14 R15 R18 R19 R20 R21 R23 R24 R25 R26 R27
031	4	EA	75042	100-038-510	RG1/8-510HM-5%	MTFLM 51 OHM.125W 5%	R13 R16 R17 R22
036	1	EA	30035	121-202-010	SPCJ-200-03	TEST POINT PC BLK	TPGND
039	1	EA	20747	290-0129-501	290-0129-501	MILLERZ DECODER	U2
042	2	EA	01295	139-198-490	SN74LS90N	DEC CTR 14P	U4 U14
044	4	EA	27014	139-598-400	74F00PC	IC QUAD NAND 14 PIN	U3 U5 U37 U38
047	1	EA	01295	139-198-495	SN74LS95BN	4 BIT SHIFT REG 14PN	U6
049	1	EA	20747	290-0225-501	290-0225-501	290-0225-501 PAL20S10	U19
050	1	EA	20747	290-0222-501	290-0222-501	290-0222-501 PAL16L8	U7
051	1	EA	20747	290-0223-501	290-0223-501	290-0223-501 PAL20RA	U34
052	1	EA	20747	290-0224-501	290-0224-501	290-0224-501 PAL20RA	U8
054	2	EA	27014	139-598-404	74F04PC	HEX INVERTER 14 PIN	U18 U35
056	1	EA	01295	139-198-404	SN74LS04N	HEX INVERTER 14P	U12

PARTS LIST	DESIGN ACTIVITY IDENTIFICATION AYDIN COMPUTER AND MONITOR DIVISION HORSHAM, PA. 19044	CONTRACT NO.	CAGE CODE 20747	PL460-2134-501	REV E

LIST TITLE CARD ASSY CCR049-1	SUBCONTRACT NO.		SHEET NO. 3

FIND NO	QTY REQ	U/M	CAGE CODE	DOCUMENT NUMBER	PART OR IDENTIFYING NUMBER	NOMENCLATURE OR DESCRIPTION	NOTES
058	2	EA	01295	139-658-163	SN74ALS163BN	SYN 4-BIT DEC CTR 16P	U1 U10
060	2	EA	27014	139-598-157	74F157APC	IC QUAD 2IN MUX 16PN	U13 U26
062	1	EA	01295	139-198-393	SN74LS393N	DUAL 4BIT BIN CTR 14P	U15
064	1	EA	01295	139-198-493	SN74LS93N	4 BT BINARY CNTR 14P	U16
067	2	EA	27014	139-598-486	74F86PC	IC QUAD 2IN XOR 14PN	U17 U41
069	4	EA	01295	139-658-474	SN74ALS74AN	DUAL "D" FLP/FLP 14 P	U11 U25 U31 U40
071	1	EA	01295	139-046-150	SN74150N	DATA SELEC/MUX 24 P	U33
072	1	EA	01295	139-658-402	SN74ALS02N	QUAD 2IN NOR 14P	U20
074	2	EA	01295	139-198-113	SN74LS113AN	DUAL JK FF W/PR 14 PN	U21 U36
077	4	EA	27014	139-598-164	74F164PC	IC SHIFT REGIS 14 PIN	U9 U22 U23 U24
078	1	EA	18324	139-598-438	N74F38N	IC QUAD 2IN"NAND"14P	U43
079	1	EA	27014	139-598-583	74F583PC	4 BT BCD ADDER 16 PN	U32
082	3	EA	07263	139-274-001	UA9638TC	IC LINE DRIVER 8 PIN	U29 U30 U42
084	1	EA	27014	139-598-153	74F153PC	IC DUAL 4-1 MUX 16PN	U39
086	2	EA	01295	139-085-107	SN75107AN	IC LINE RECVR 14 PIN	U27 U28
091	3	EA	06776	108-934-033	ICA-243-S-TG30	SOC DIP 24PIN .3 CNTR	
092	2	EA	06776	108-934-017	ICA-203-S-TG30	SCKT DIP 20P PC MT	
100	AR	EA	85480	124-035-011	DAT-18-502-1	LABL VNYL CLTH .5X1.0	
				SD 600-0502		SCHEMATIC DIAGRAM - CCR049	
				AD 460-2134-501		ASSEMBLY DRAWING - CARD ASSY CCR049-1	
				AT 297-1163		ACCEPTANCE TEST PROCEDURE - CHECKOUT PROCD CCR049	

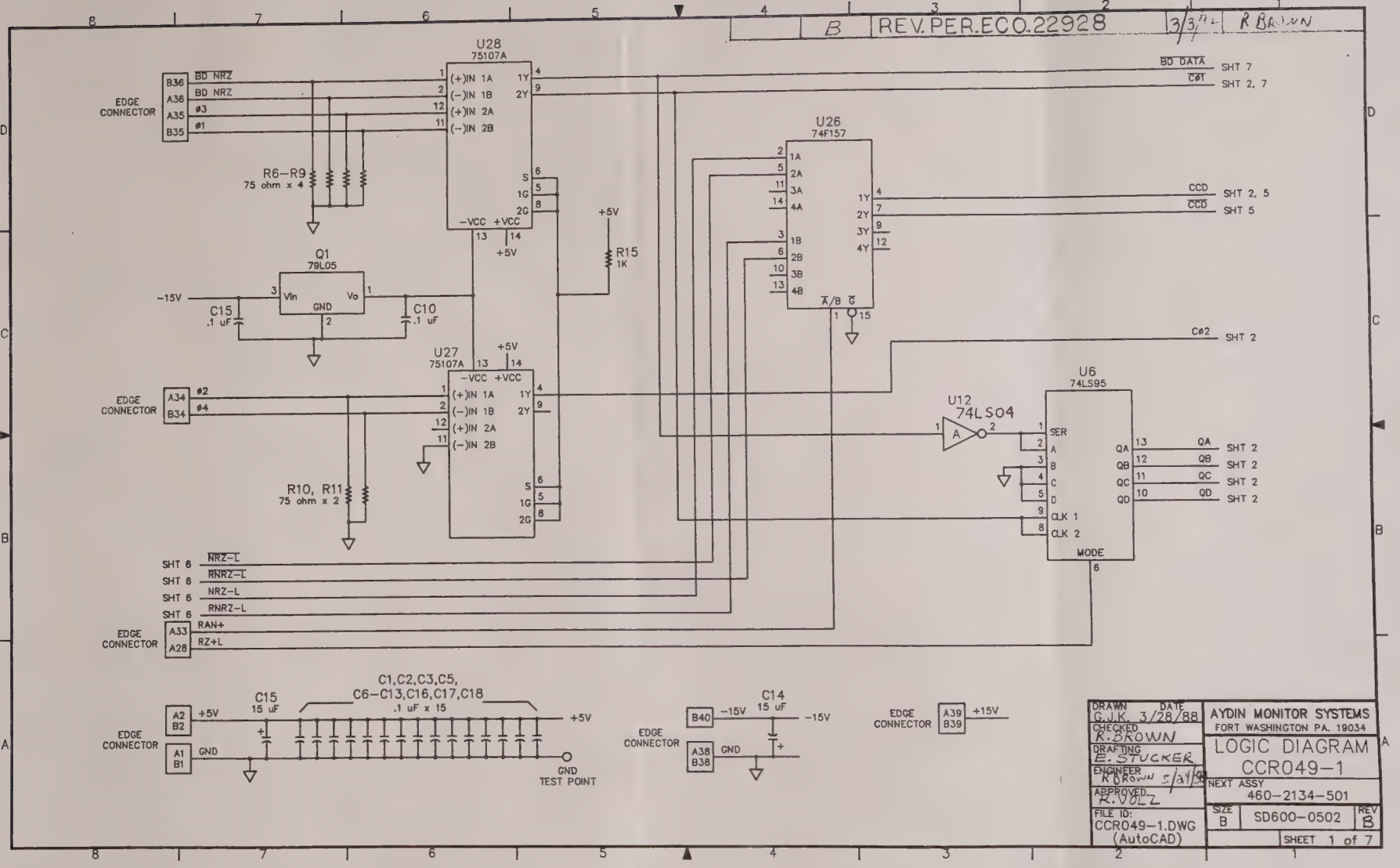

B
REV. PER. ECO. 22928
3/3/88
R BROWN
U28
75107A
(+)IN 1A
(−)IN 1B
(+)IN 2A
(−)IN 2B
1Y
2Y
S
1G
2G
−VCC
+VCC
+5V
EDGE CONNECTOR
B36
A36
A35
B35
BD NRZ
BD NRZ
ø3
ø1
R6−R9
75 ohm x 4
Q1
79L05
Vin
Vo
GND
−15V
C15
.1 uF
C10
.1 uF
R15
1K
U27
75107A
A34
B34
ø2
ø4
R10, R11
75 ohm x 2
U26
74F157
1A
2A
3A
4A
1B
2B
3B
4B
A/B
G
BD DATA
SHT 7
CØ1
SHT 2, 7
CCD
SHT 2, 5
CCD
SHT 5
CØ2
SHT 2
U12
74LS04
U6
74LS95
SER
A
B
C
D
CLK 1
CLK 2
MODE
QA
QB
QC
QD
SHT 2
SHT 6
NRZ−L
RNRZ−L
RAN+
RZ+L
A33
A28
A2
B2
A1
B1
+5V
GND
C15
15 uF
C1,C2,C3,C5,
C6−C13,C16,C17,C18
.1 uF x 15
GND
TEST POINT
B40
A38
B38
C14
15 uF
A39
B39
+15V
DRAWN G.J.K. DATE 3/28/88
CHECKED R. BROWN
DRAFTING E. STUCKER
ENGINEER R BROWN 5/24/88
APPROVED R. VOLZ
FILE ID: CCR049−1.DWG (AutoCAD)
AYDIN MONITOR SYSTEMS
FORT WASHINGTON PA. 19034
LOGIC DIAGRAM
CCR049−1
NEXT ASSY 460−2134−501
SIZE B
SD600−0502
REV B
SHEET 1 of 7

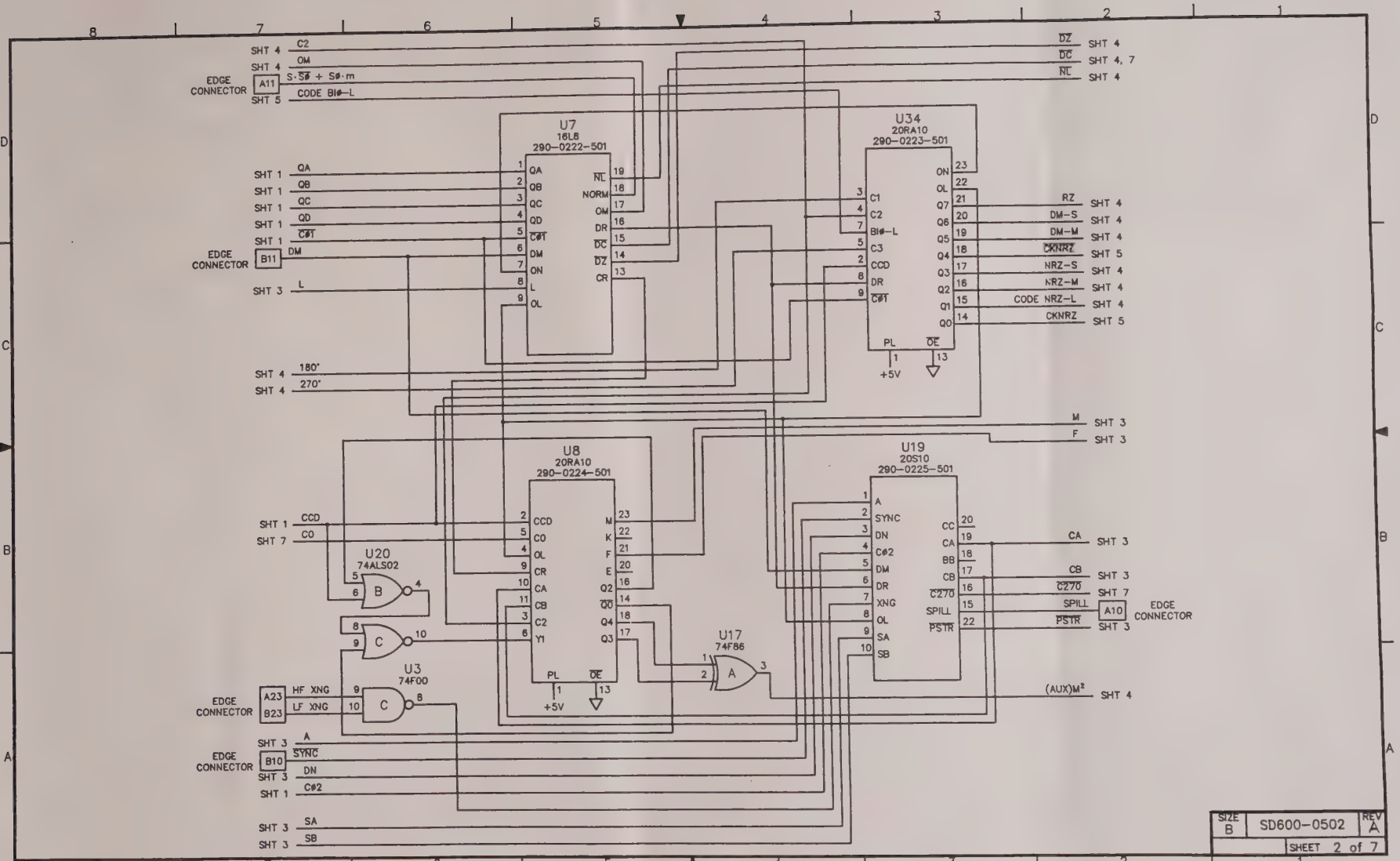
U7
16L8
290-0222-501
U34
20RA10
290-0223-501
U8
20RA10
290-0224-501
U19
20S10
290-0225-501
U20
74ALS02
U3
74F00
U17
74F86
EDGE CONNECTOR
A11
B11
B10
A23
B23
A10
SHT 4 C2
SHT 4 OM
S·S∅ + S∅·m
SHT 5 CODE BI∅-L
SHT 1 QA
SHT 1 QB
SHT 1 QC
SHT 1 QD
SHT 1 C∅T
DM
SHT 3 L
SHT 4 180°
SHT 4 270°
SHT 1 CCD
SHT 7 CO
SHT 3 A
SYNC
SHT 3 DN
SHT 1 C∅2
SHT 3 SA
SHT 3 SB
HF XNG
LF XNG
DZ SHT 4
DC SHT 4, 7
NL SHT 4
RZ SHT 4
DM-S SHT 4
DM-M SHT 4
CKNRZ SHT 5
NRZ-S SHT 4
NRZ-M SHT 4
CODE NRZ-L SHT 4
CKNRZ SHT 5
M SHT 3
F SHT 3
CA SHT 3
CB SHT 3
C270 SHT 7
SPILL
PSTR SHT 3
(AUX)M² SHT 4
+5V
SIZE B
SD600-0502
REV A
SHEET 2 of 7

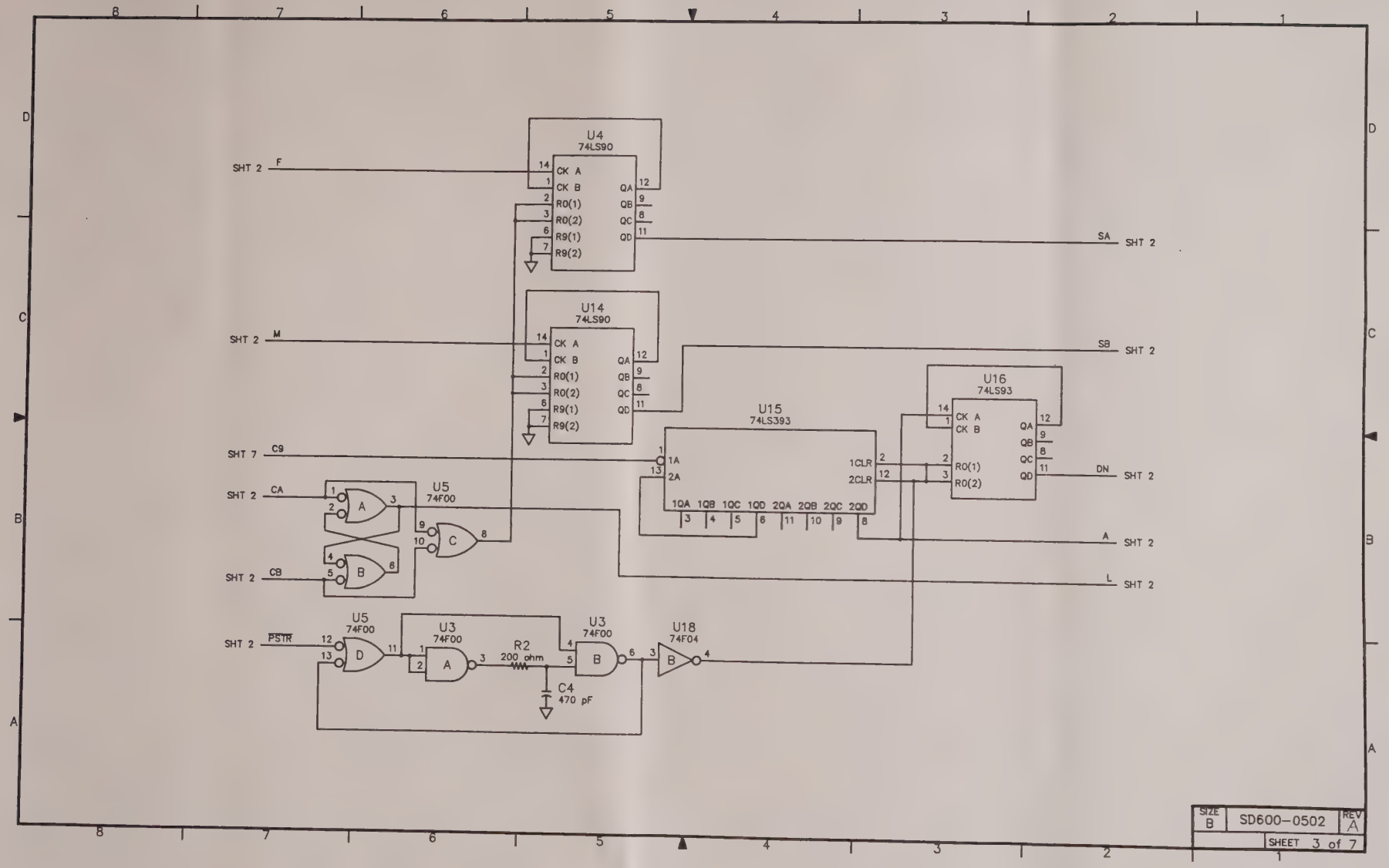
U4
74LS90
SHT 2 F
CK A
CK B
R0(1)
R0(2)
R9(1)
R9(2)
QA
QB
QC
QD
SA SHT 2
U14
74LS90
SHT 2 M
SB SHT 2
U15
74LS393
SHT 7 C9
1A
2A
1CLR
2CLR
1QA 1QB 1QC 1QD 2QA 2QB 2QC 2QD
U16
74LS93
DN SHT 2
A SHT 2
L SHT 2
U5
74F00
SHT 2 CA
SHT 2 CB
A
B
C
D
U3
74F00
R2
200 ohm
C4
470 pF
U18
74F04
SHT 2 PSTR
SIZE B
SD600-0502
REV A
SHEET 3 of 7

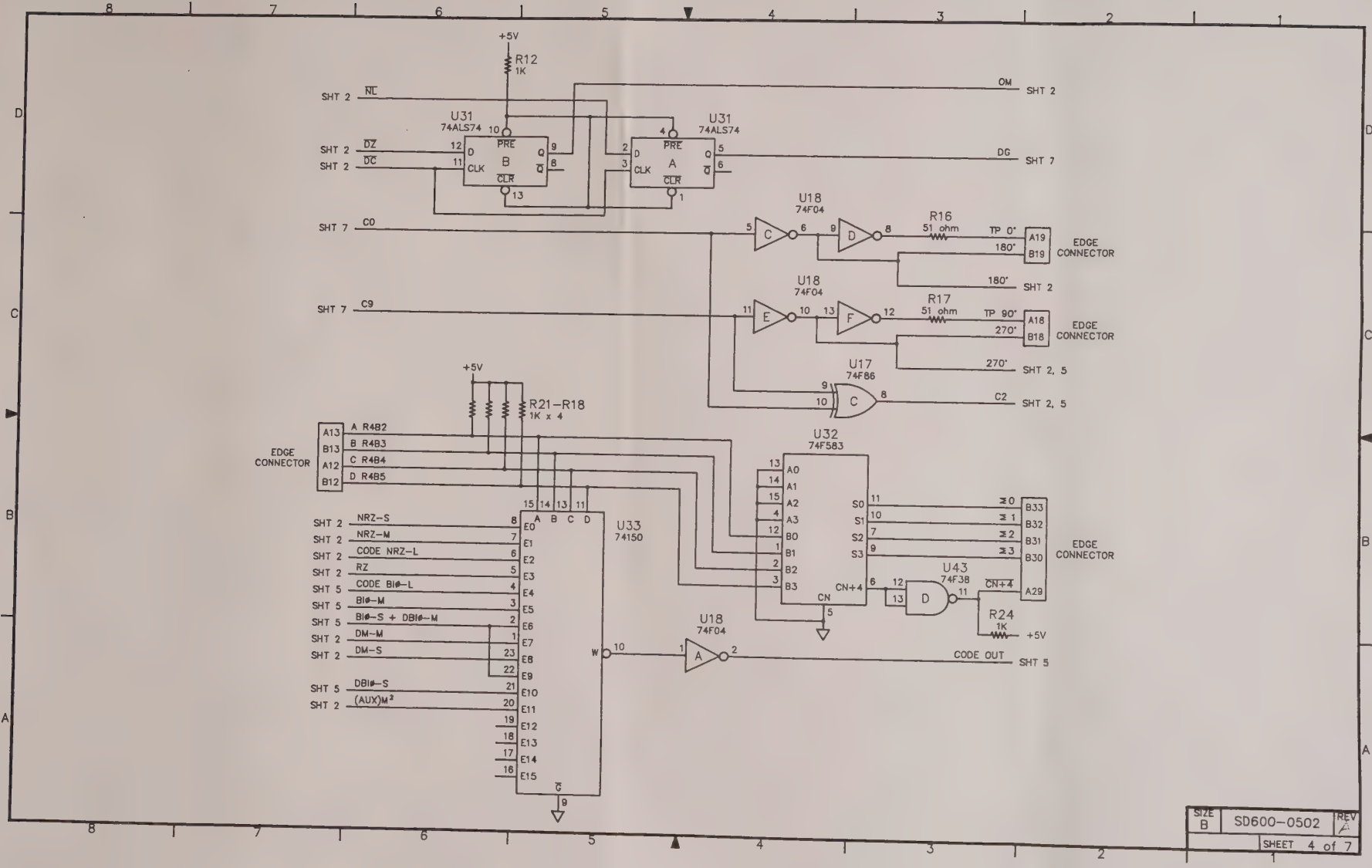

SIZE		REV
B	SD600–0502	A
	SHEET 4 of 7	

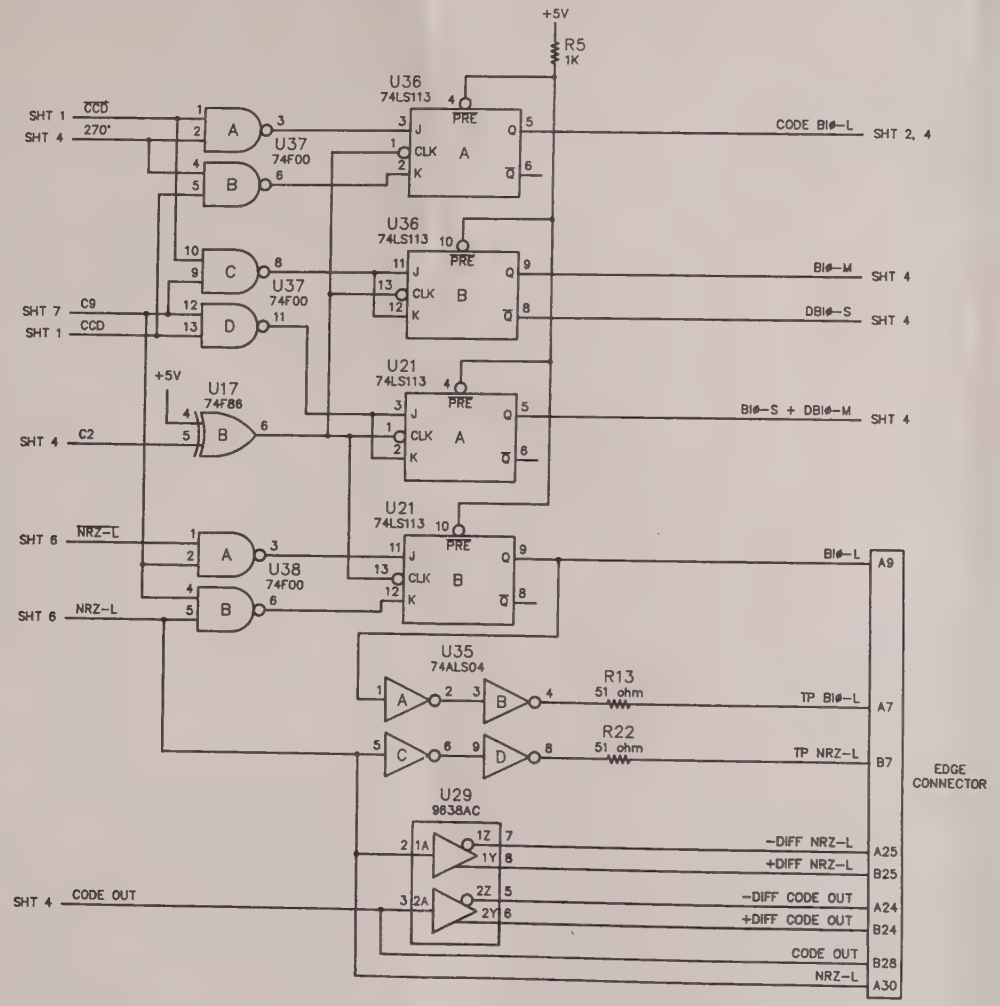

SIZE		REV
B	SD600–0502	A
	SHEET 5 of 7	

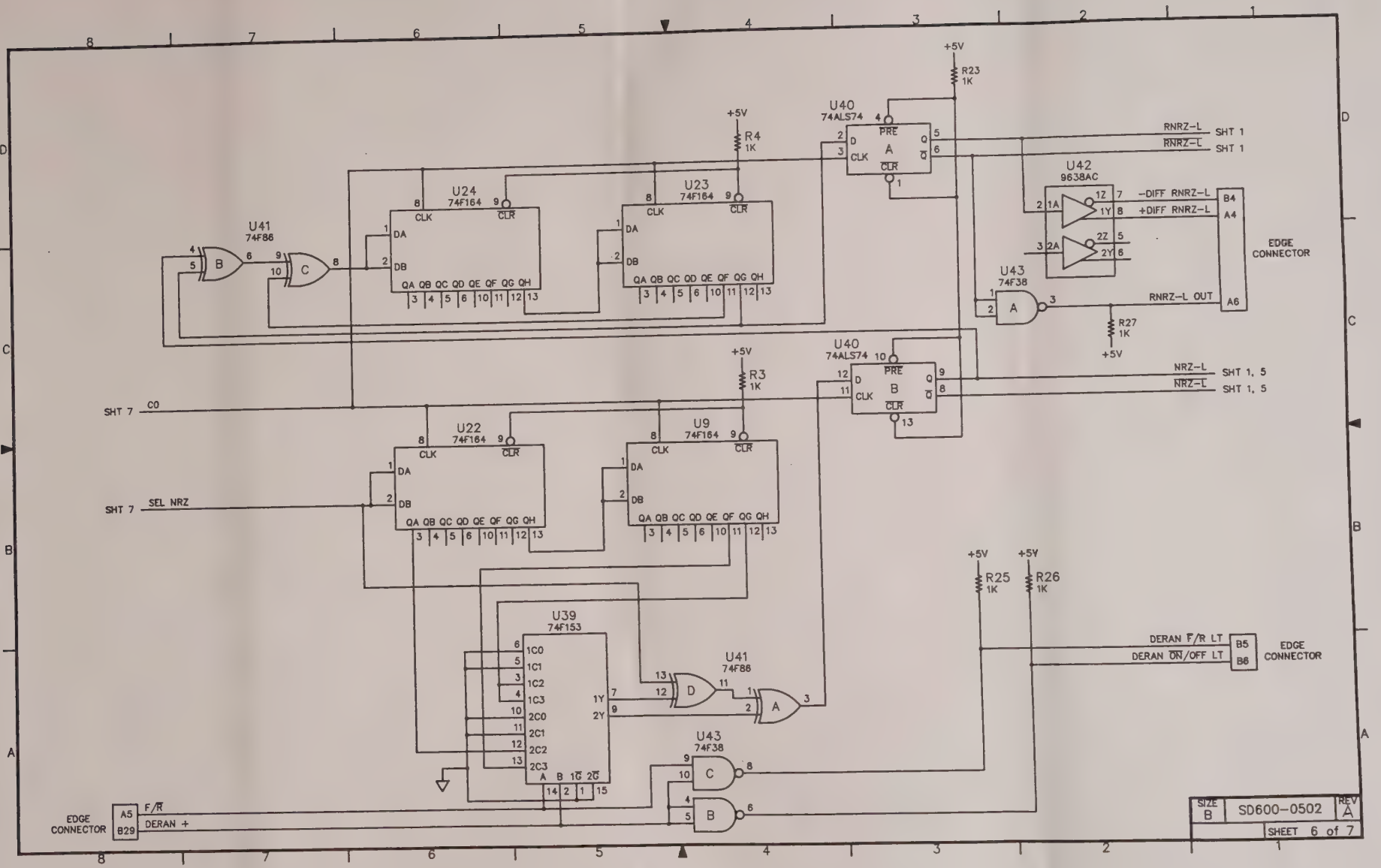
+5V
R23 1K
U40 74ALS74
RNRZ-L SHT 1
RNRZ-L SHT 1
R4 1K
U24 74F164
U23 74F164
U42 9638AC
-DIFF RNRZ-L
+DIFF RNRZ-L
EDGE CONNECTOR
U41 74F86
U43 74F38
RNRZ-L OUT
R27 1K
R3 1K
U40 74ALS74
NRZ-L SHT 1, 5
NRZ-L SHT 1, 5
SHT 7 CO
U22 74F164
U9 74F164
SHT 7 SEL NRZ
R25 1K
R26 1K
U39 74F153
DERAN F/R LT
DERAN ON/OFF LT
EDGE CONNECTOR
EDGE CONNECTOR A5 B29 F/R DERAN +
SIZE B SD600-0502 REV A
SHEET 6 of 7

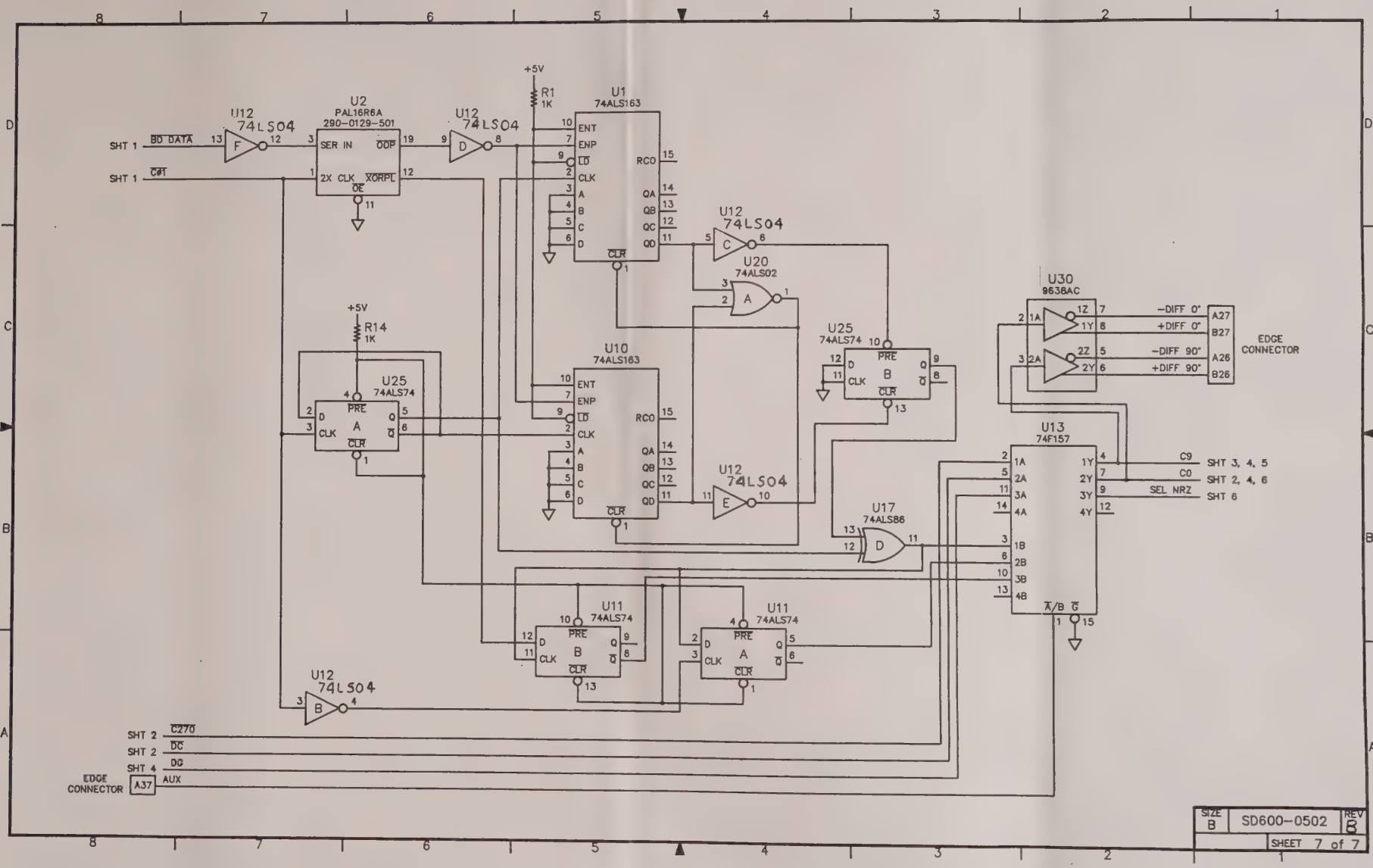
U12 74LS04
U2 PAL16R6A 290-0129-501
U1 74ALS163
U10 74ALS163
U20 74ALS02
U25 74ALS74
U30 9638AC
U13 74F157
U17 74ALS86
U11 74ALS74
R1 1K
R14 1K
+5V
SHT 1 BD DATA
SHT 1 C0T
SER IN
2X CLK
XORPL
ENT
ENP
LD
CLK
RCO
QA
QB
QC
QD
CLR
PRE
EDGE CONNECTOR
-DIFF 0°
+DIFF 0°
-DIFF 90°
+DIFF 90°
C9
C0
SEL NRZ
SHT 3, 4, 5
SHT 2, 4, 6
SHT 6
SHT 2 C270
SHT 2 DC
SHT 4 DG
A37 AUX
SIZE B
SD600-0502
REV B
SHEET 7 of 7

NOTICE TO PERSONS RECEIVING THIS DOCUMENT. THIS DOCUMENT IS THE EXCLUSIVE PROPERTY OF AYDIN CORPORATION. CONTAINS PROPRIETARY AND PRIVATE INFORMATION OF THE COMPANY AND IS DELIVERED ON THE EXPRESS CONDITION THAT IT IS NOT TO BE DISCLOSED OR REPRODUCED (IN WHOLE OR IN PART) NOR USED FOR MANUFACTURE BY ANYONE OTHER THAN THE AYDIN CORPORATION AND FURTHER NO RIGHT IS GRANTED TO DISCLOSE OR SO USE ANY INFORMATION CONTAINED IN THIS DOCUMENT

REVISIONS			
ZONE	LTR	DESCRIPTION	DATE	APPROVED

MARK APPROPRIATE DASH NO. AS REQUIRED

MARK COMPLETE PART NUMBER, CURRENT REVISION & SERIAL NUMBER ON CARD WITH WHITE INK

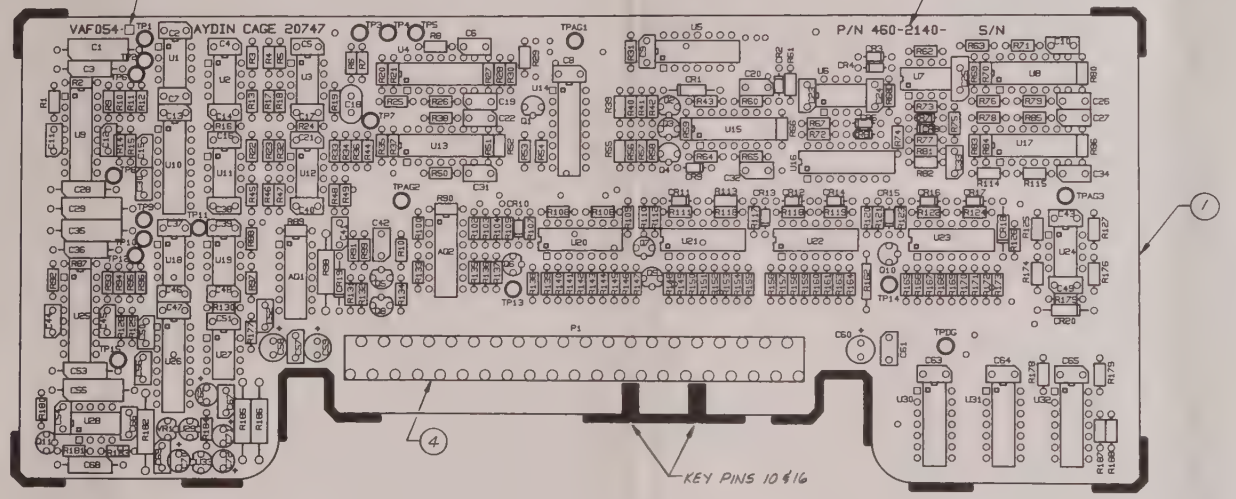

NOTES:

1. FOR GENERAL MANUFACTURING & ENGINEERING NOTES SEE DWG NO. A) 401-0001.

FOR PARTS LIST SEE PL460-2140-501

DRAWN	W. WARD	DATE 4-17-89
CHECKED		
DRAFTING		
ENGINEER		
MFG		
APPROVED	J. BYTIM	
APPROVED		

AYDIN MONITOR SYSTEMS
PORT WASHINGTON, PENNSYLVANIA

CARD ASSEMBLY
VAF054

NEXT ASSY	USED ON
1245-8000	
APPLICATION	

SIZE	CODE IDENT NO.		REV
D	20747	AD460-2140-501	-
SCALE 2:1		SHEET 1 OF 1	

REVISIONS			
REV	DESCRIPTION	DATE	APPROVED
A	REV PER ECO 17917 D.H.	10-2 87	
B	REV PER ECO 18808 "	11-2-90	
C	REV PER ECO 20327 P.F.	10/2/90	R BROWN

		CONTRACT NO.	AYDIN COMPUTER AND MONITOR Division 700 DRESHER ROAD HORSHAM. PA 19044
		DRAWN W. WARD DATE 4-17-89	PARTS LIST VAFØ54
		CHECKED	
		DRAFTING	
		APPROVED	
	1245-8000	APPROVED	SIZE A / CAGE CODE 20747 / DWG NO PL460-2140-501 / REV C
NEXT ASSY	USED ON		
APPLICATION		APPROVED 4/21/89	SCALE ∝ / SHEET 1 OF 7

800-0015E

PARTS LIST	DESIGN ACTIVITY IDENTIFICATION AYDIN COMPUTER AND MONITOR DIVISION HORSHAM, PA. 19044	CONTRACT NO. 9910	CAGE CODE 20747	PL460-2140-501	REV C

LIST TITLE PARENT VAF054-1	SUBCONTRACT NO.		SHEET NO. 2

FIND NO	QTY REQ	U/M	CAGE CODE	DOCUMENT NUMBER	PART OR IDENTIFYING NUMBER	NOMENCLATURE OR DESCRIPTION	NOTES
001	1	EA		400-2060	400-2060	PWB VAF054	
004	1	EA	91662	108-203-041	7022-041-000001	CONN FING BLOC 41 POS	P1
010	4	EA	14752	102-049-105	625B1A105	CAP 1UF 50V 2%	C1 C29 C35 C55
012	5	EA	14752	102-047-103	625B1B103G	CAP .01UF 100V 2%	C3 C28 C36 C53 C68
014	52	EA	71590	102-419-104	CK06BX104M	CAP .1UF 100V 20%	C2 C4 C5 C6 C7 C8 C9 C10 C11 C12 C14 C15 C16 C17 C19 C20 C21 C22 C23 C24 C26 C27 C30 C31 C32 C33 C34 C37 C38 C39 C40 C41 C42 C43 C44 C45 C46 C48 C49 C50 C51 C52 C54 C56 C57 C61 C63 C64 C65 C66 C67 C69
015	2	EA	72982	102-417-332	CRC230C0G332J100	MONO 3.3K PF COG 5%	C13 C47
016	1	EA		102-109-151	DM101151J	CAP 150PF 500V 5%	C18
018	1	EA	71590	102-422-105	K105M30Z5UFVCXD	CAP 1UF 50V 20%	C25
020	3	EA	56289	102-623-002	196D156X0020KA1	TANT DP 15UF 20V 20%	C58 C59 C60
022	4	EA	56289	102-623-011	196D225X0025HA1	TANT DP 2.2UF 25V 20%	C62 C70 C71 C72
030	1	EA	04713	104-056-105	1N753A	DIODE ZENER CASE 51	CR1
032	16	EA	01295	104-503-014	1N4531	DIODE SIG MINIATURE	CR2 CR3 CR4 CR5 CR6 CR7 CR8 CR9 CR10 CR11 CR12 CR13 CR14 CR15 CR16 CR17
034	1	EA		104-056-104	1N757A	DIODE ZENER CASE 51	CR18
036	1	EA		104-056-110	1N755A	DIODE ZENER CASE 51	CR19
040	1	EA	04713	104-308-006	1N821A	DIODE ZENER SILICON	CR20
050	3	EA	04713	103-408-001	2N4124	TRANS SIL NPN TO-92	Q1 Q6 Q10

PARTS LIST	DESIGN ACTIVITY IDENTIFICATION AYDIN COMPUTER AND MONITOR DIVISION HORSHAM, PA. 19044	CONTRACT NO. 9910	CAGE CODE 20747	PL460-2140-501	REV C

LIST TITLE PARENT VAF054-1	SUBCONTRACT NO.		SHEET NO. 3

FIND NO	QTY REQ	U/M	CAGE CODE	DOCUMENT NUMBER	PART OR IDENTIFYING NUMBER	NOMENCLATURE OR DESCRIPTION	NOTES
052	7	EA	04713	103-304-001	2N4126	TRANS SIL PNP TO-92	Q2 Q3 Q4 Q5 Q7 Q8 Q9
055	1	EA	03508	103-319-004	2N3904	TRANS SIL NPN TO-92	Q11
056	2	EA	86684	139-209-002	CA3046	TRANS ARRAY	A01 A02
060	3	EA		100-222-2802	RN50C2802F	REPLACE W/100-046-2802	R2 R11 R14
068	16	EA	20747	100-222-1002	100-222-1002	REPLACE W/100-046-1002	R3 R5 R17 R22 R32 R33 R47 R61 R68 R82 R88 R127 R174 R176 R177 R181
070	1	EA		100-222-1272	RN50C1272F	REPLACE W/100-046-1272	R4
072	1	EA		100-222-4121	RN50C4121F	REPLACE W/100-046-4121	R6
074	2	EA		100-222-7871	RN50C7871F	REPLACE W/100-046-7871	R7 R183
076	3	EA		100-222-2493	RN50C2493F	REPLACE W/ 100-046-2493	R1 R12 R15
078	1	EA	81349	100-222-1742	RN50C1742F	REPLACE W/100-046-1742	R9
080	1	EA	20747	100-222-1583	100-222-1583	REPLACE W/100-046-1583	R10
082	1	EA		100-222-6651	RN50C6651F	REPLACE W/100-046-6651	R13
084	2	EA		100-222-2801	RN50C2801F	REPLACE W/100-046-2801	R16 R130
086	1	EA	81349	100-222-1542	RN50C1542F	REPLACE W/100-046-1542	R18
088	2	EA	81349	100-222-3012	RN50C3012F	REPLACE W/100-046-3012	R19 R24
090	3	EA	81349	100-222-2490	RN50C2490F	REPLACE W/100-046-2490	R20 R69 R83
094	3	EA	81349	100-222-4990	RN50C4990F	REPLACE W/100-046-4990	R8 R71 R76
096	1	EA	81349	100-222-1692	RN50C1692F	REPLACE W/100-046-1692	R23
098	14	EA		100-038-201	CCF-50-2000-F	MTFLM 200 OHM.125W 5%	R25 R26 R35 R38 R43 R50 R52 R60 R64 R65 R78 R85 R114 R115

PARTS LIST	DESIGN ACTIVITY IDENTIFICATION AYDIN COMPUTER AND MONITOR DIVISION HORSHAM, PA. 19044	CONTRACT NO. 9910	CAGE CODE 20747	PL460-2140-501	REV C

LIST TITLE PARENT VAF054-1	SUBCONTRACT NO.		SHEET NO. 4

FIND NO	QTY REQ	U/M	CAGE CODE	DOCUMENT NUMBER	PART OR IDENTIFYING NUMBER	NOMENCLATURE OR DESCRIPTION	NOTES
100	16	EA	91637	100-038-102	CCF-50-1001-F	MTFLM 1K .125W 5%	R29 R30 R31 R36 R42 R44 R54 R55 R105 R147 R166 R178 R179 R180 R187 R188
102	3	EA	75042	100-038-161	RG1/8-160-OHM-5%	MTFLM 160 OHM.125W 5%	R28 R63 R79
106	1	EA	81349	100-222-4871	RN50C4871F	REPLACE W/100-046-4871	R62
108	1	EA	91637	100-038-203	CCF-50-2002-F	MTFLM 20K .125W 5%	R34
112	2	EA	91637	100-038-471	CCF-4700-F	MTFLM 470 OHM.125W 5%	R39 R41
114	2	EA	91637	100-038-222	CCF-50-2201-F	MTFLM 2.2K .125W 5%	R40 R110
116	2	EA		100-222-3921	RN50C3921F	REPLACE W/100-046-3921	R45 R97
118	1	EA		100-222-1182	RN50C1182F	MTFLM 11.8K .05W 1%	R46
120	1	EA	20747	100-222-1472	100-222-1472	REPLACE W/100-046-1472	R48
121	1	EA	20747	100-222-1541	100-222-1541	REPLACE W/100-046-1541	R49
122	3	EA	91637	100-038-153	CCF-50-1502-F	MTFLM 15K .125W 5%	R53 R107 R121
124	5	EA	91637	100-038-682	CCF-50-6801-F	MTFLM 6.8K .125W 5%	R56 R67 R72 R138 R165
126	1	EA	91637	100-038-152	CCF-50-1501-F	MTFLM 1.5K .125W 5%	R57
128	1	EA	81349	100-017-SBT	RC07GFSBTJ	RES SBT 1/8W 5%	R58
130	2	EA		100-038-681	CCF-50-6800-F	MTFLM 680 OHM.125W 5%	R73 R81
131	8	EA	91637	100-038-272	CCF-50-2701-F	MTFLM 2.7K .125W 5%	R74 R77 R106 R119 R124 R142 R159 R169
132	1	EA	81349	100-017-126	RC05GF126J	RES 12MEG 1/8W 5%	R75
134	3	EA	81349	100-222-1502	RN50C1502F	REPLACE W/100-046-1502	R87 R95 R128
136	2	EA	81349	100-222-1000	RN50C1000F	REPLACE W/100-046-1000	R89 R91
138	2	EA	81349	100-222-1501	RN50C1501F	REPLACE W/100-046-1501	R90 R100
140	3	EA		100-222-1333	RN50C1333F	REPLACE W/100-046-1333	R92 R96 R129

PARTS LIST	DESIGN ACTIVITY IDENTIFICATION AYDIN COMPUTER AND MONITOR DIVISION HORSHAM, PA. 19044	CONTRACT NO. 9910	CAGE CODE 20747	PL460-2140-501	REV C

LIST TITLE PARENT VAF054-1	SUBCONTRACT NO.		SHEET NO. 5

FIND NO	QTY REQ	U/M	CAGE CODE	DOCUMENT NUMBER	PART OR IDENTIFYING NUMBER	NOMENCLATURE OR DESCRIPTION	NOTES
142	1	EA		100-222-2552	RN50C2552F	REPLACE W/100-046-2552	R93
144	1	EA		100-222-2323	RN50C2323F	REPLACE W/100-046-2323	R94
146	1	EA		100-039-471	RG1/2-470-OHM5%	MTFLM 470 OHM.5W 5%	R98
148	2	EA	91637	100-038-332	CCF-50-3301-F	MTFLM 3.3K .125W 5%	R99 R104
150	2	EA		100-038-680	CCF-50-68R0-F	MTFLM 68 OHM .125W 5%	R101 R134
151	2	EA	91637	100-038-472	CCF-50-4701-F	MTFLM 4.7K .125W 5%	R102 R184
152	7	EA	91637	100-038-103	CCF-50-1002-F	MTFLM 10K .125W 5%	R21 R27 R59 R66 R70 R80 R103
154	34	EA	91637	100-038-101	CFF-50-1000-F	MTFLM 100 OHM.125W 5%	R108 R109 R111 R112 R118 R120 R123 R126 R133 R135 R136 R137 R139 R140 R141 R143 R144 R145 R146 R148 R149 R153 R157 R158 R160 R161 R163 R164 R167 R168 R170 R171 R172 R173
156	3	EA		100-038-123	CCF-50-1202-F	MTFLM 12K .125W 5%	R113 R122 R156
158	2	EA		100-038-750	CCF-50-75R0-5%	MTFLM 75 OHM .125W 5%	R116 R152
160	2	EA		100-038-221	CFF-50-2200-F	MTFLM 220 OHM.125W 5%	R117 R151
162	1	EA	81349	100-222-1211	RN50C1211F	REPLACE W/100-046-1211	R125
163	1	EA	20747	100-222-1001	100-222-1001	REPLACE W/100-046-1001	R131
164	5	EA	91637	100-038-512	CCF-50-5101-F	MTFLM 5.1K .125W 5%	R37 R51 R84 R86 R132
166	1	EA		100-038-182	CCF-50-1801-F	MTFLM 1.8K .125W 5%	R150
168	2	EA	91637	100-038-470	CCF-50-47R0-F	MTFLM 47 OHM .125W 5%	R154 R155
170	1	EA		100-222-1101	RN50C1101F	REPLACE W/100-046-1101	R175
171	1	EA		100-039-681	SMA20-680 OHM5%	MTFLM 680 OHM .5W 5%	R182

PARTS LIST	DESIGN ACTIVITY IDENTIFICATION: AYDIN COMPUTER AND MONITOR DIVISION, HORSHAM, PA. 19044	CONTRACT NO. 9910	CAGE CODE 20747	PL460-2140-501	REV C

LIST TITLE: PARENT VAF054-1	SUBCONTRACT NO.		SHEET NO. 6

FIND NO	QTY REQ	U/M	CAGE CODE	DOCUMENT NUMBER	PART OR IDENTIFYING NUMBER	NOMENCLATURE OR DESCRIPTION	NOTES
172	1	EA	11502	100-039-221	RG1/2 220 OHM5%	MTFLM 220 OHM .5W 5%	R185
174	1	EA		100-039-750	SMA20-75R0-5%	MTFLM 75 OHM .5W 5%	R186
175	1	EA	91637	100-037-471	CCF-07-471-J	MTFLM 470 OHM .25W 5%	R162
195	19	EA	71279	118-006-002	160-1558-02-01	TERMINAL TURRET SLDR	TP1 TP2 TP3 TP4 TP5 TP6 TP7 TP8 TP9 TP10 TP11 TP12 TP13 TP14 TP15 TPAG1 TPAG2 TPAG3 TPDG
200	6	EA	12040	139-930-001	LF412CN	IC DUAL OP AMP 8 PIN	U1 U3 U7 U12 U18 U24
202	5	EA	01295	139-513-001	TL082CP	IC OP AMP 8 PIN	U2 U6 U11 U19 U27
204	5	EA	12040	139-230-003	LM319N	IC DUAL COMP 14 PIN	U4 U8 U13 U15 U17
206	1	EA	01295	139-046-416	SN7416N	HEX INV.BUFFER/DR 14P	U5
208	3	EA	34371	139-546-001	HI1-0201-5	IC CMOS SWITCH 16 PIN	U9 U16 U25
210	2	EA	51640	139-652-001	AD539JD	IC LOG LIN MULT 16 PIN	U10 U26
212	1	EA	01295	139-198-151	SN74LS151N	1-8DSEL/MULTPLX 16P	U14
213	4	EA	86684	139-209-009	CA3054	TRANS/DIODE ARRAY	U20 U21 U22 U23
214	1	EA	06665	139-913-001	OP07DP	IC OP AMP 8 PIN	U28
216	1	EA	12040	139-572-001	LM79L05ACZ	VOLTAGE REG TO-92	U29
218	1	EA	01295	139-198-404	SN74LS04N	HEX INVERTER 14P	U30
220	1	EA	01295	139-198-400	SN74LS00N	QUAD 2IN NAND 14P	U31
222	1	EA	01295	139-198-432	SN74LS32N	QUAD 2 INPT POS OR 14PIN	U32
224	1	EA		139-698-013	UA78L05AWC	IC VOLT REG TO-92 5V	U33
230	1	EA	01295	139-1264-431	TL431CLP	IC PREC SHNT REG 3PN	VR1
				AD 460-2140-501		ASSEMBLY DRAWING - VAF054-1	

PARTS LIST	DESIGN ACTIVITY IDENTIFICATION AYDIN COMPUTER AND MONITOR DIVISION HORSHAM, PA. 19044	CONTRACT NO. 9910	CAGE CODE 20747	PL460-2140-501	REV C

LIST TITLE PARENT VAF054-1	SUBCONTRACT NO.		SHEET NO. 7

FIND NO	QTY REQ	U/M	CAGE CODE	DOCUMENT NUMBER	PART OR IDENTIFYING NUMBER	NOMENCLATURE OR DESCRIPTION	NOTES
			SD	600-0536		SCHEMATIC DIAGRAM - VAF054	
			AT	297-1245		ACCEPTANCE TEST PROCEDURE - ATP VAF054-1	

SD 5536

REVISIONS				
ZONE	LTR	DESCRIPTION	DATE	APPROVED
	A	REVISED PER ECO 17917	10-2-89	J. BOYTIM
	B	REVISED PER ECO 18808	1-9-90	[illegible]
	C	REVISED PER ECO #20327	10/4/90	R BROWN

VAF054.S00

VAF054.S01 | VAF054.S02 | VAF054.S03

VAF054.S04 | VAF054.S05 | VAF054.S06

VAF054.S07 | VAF054 SHEET 8 | VAF054.S09

SHEET	46	47	48	49	50	51	52	53	54	55	56	57	58	59	60
REV.															
SHEET	31	32	33	34	35	36	37	38	39	40	41	42	43	44	45
REV.															
SHEET	16	17	18	19	20	21	22	23	24	25	26	27	28	29	30
REV.															
SHEET	1	2	3	4	5	6	7	8	9	10	11	12	13	14	15
REV.	C	C	—	A	B	—	—	—	—						

460-2140 NEXT ASSY. | 1245-80 USED ON

APPLICATION

DRAWN R.C.	DATE 10-24-88
CHECKED	
DRAFTING G.J.K.	4/6/89
ENGINEER J. BOYTIM	
APPROVED	
MAGNETIC MEDIA	

AYDIN COMPUTER AND MONITOR DIVISION
700 DRESHER ROAD
HORSHAM, PA 19044

VAF054-1

SIZE	CAGE CODE	DOCUMENT NO.	REV.
B	20747	SD 600-0536	C

SHEET NO. 00 OF 9

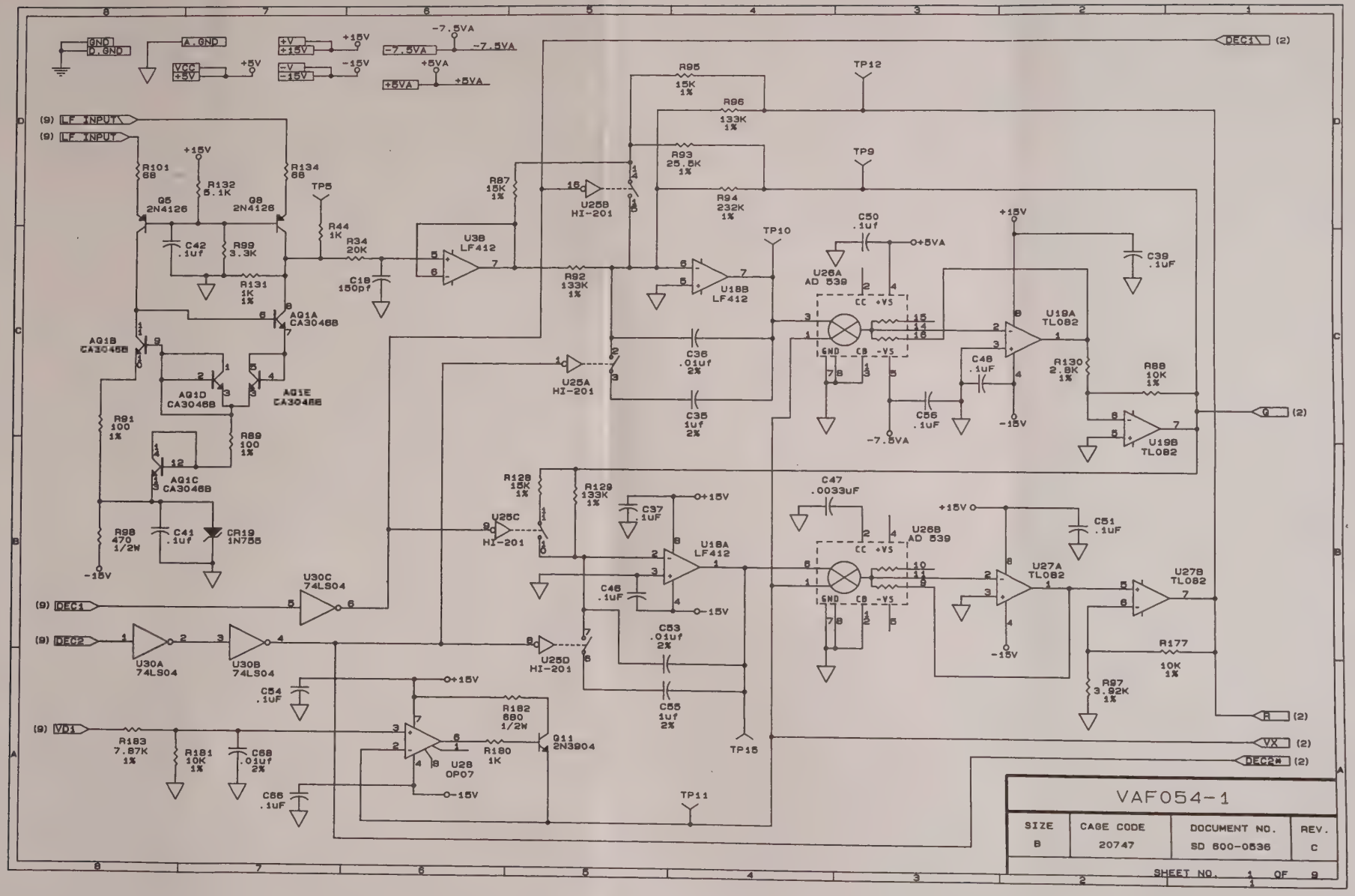

VAF054-1			
SIZE B	CAGE CODE 20747	DOCUMENT NO. SD 600-0536	REV. C
SHEET NO. 1 OF 9			

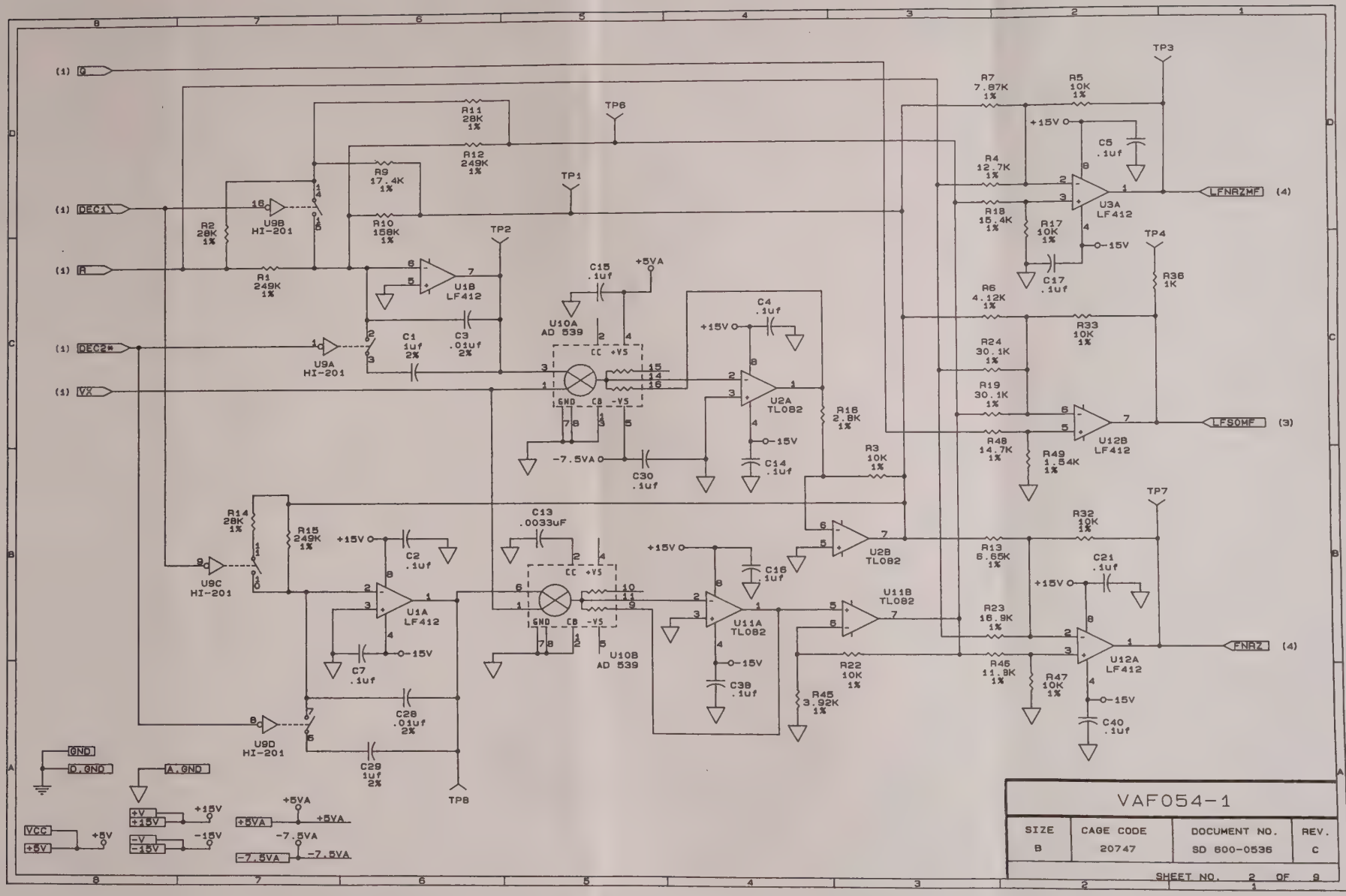

VAF054-1			
SIZE	CAGE CODE	DOCUMENT NO.	REV.
B	20747	SD 600-0536	C
SHEET NO. 2 OF 9			

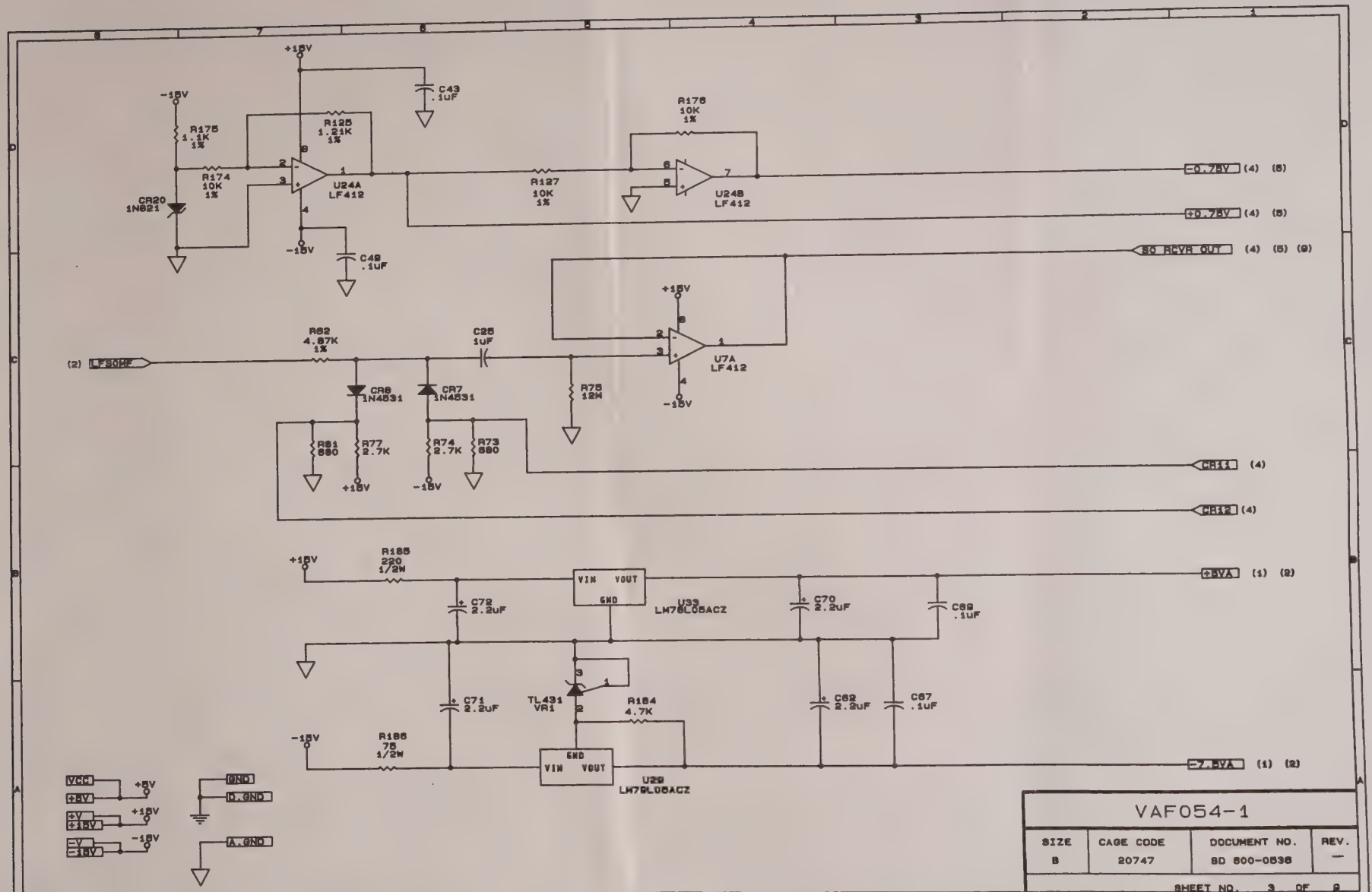

VAF054-1			
SIZE B	CAGE CODE 20747	DOCUMENT NO. SD 600-0536	REV. —
SHEET NO. 3 OF 9			

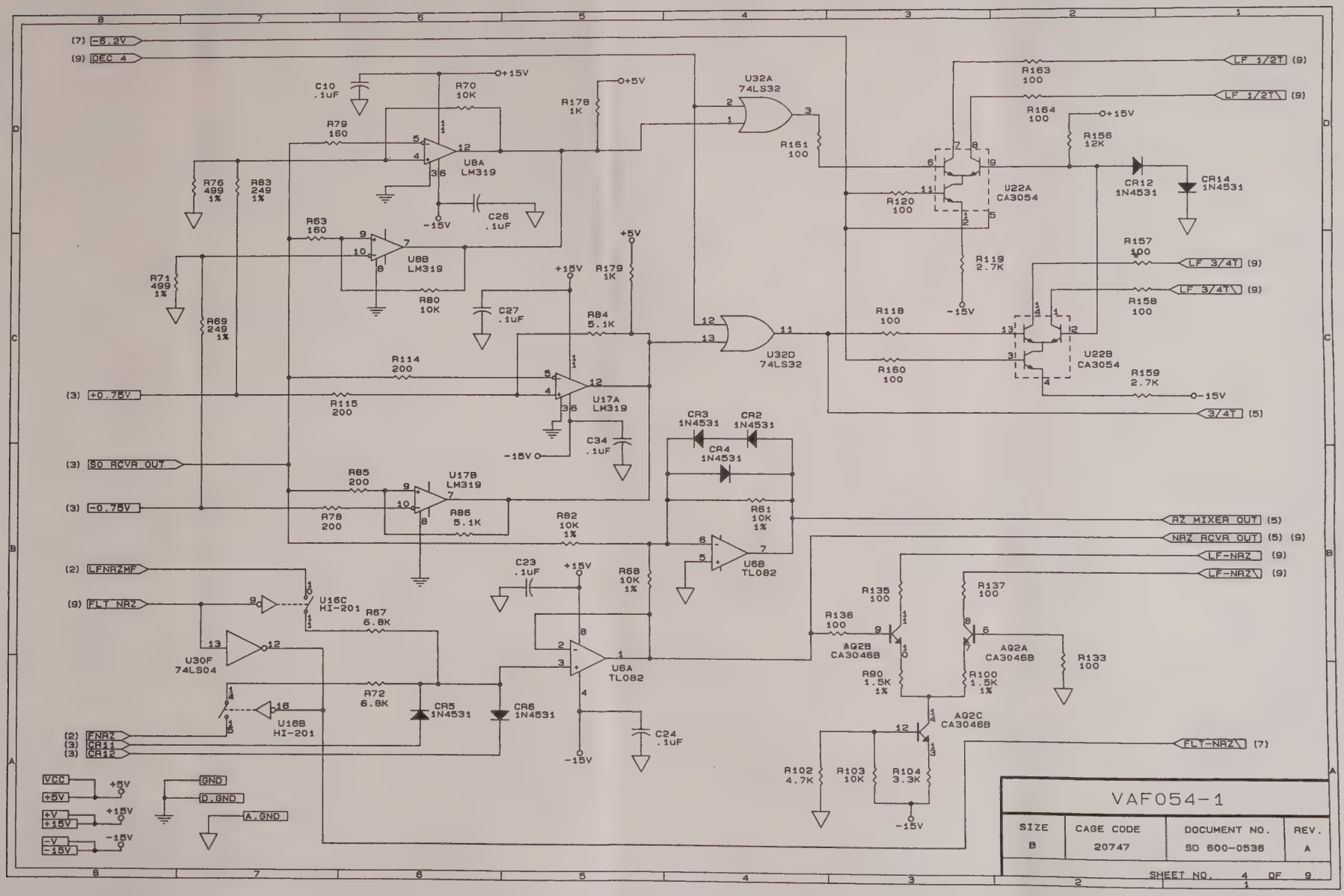
(7) -6.2V
(9) DEC 4
C10 .1UF
R70 10K
+15V
R178 1K
+5V
U32A 74LS32
R79 160
U8A LM319
R76 499 1%
R83 249 1%
-15V
C26 .1UF
R163 100
LF 1/2T (9)
R164 100
LF 1/2T (9)
R156 12K
R161 100
CR12 1N4531
CR14 1N4531
U22A CA3054
R120 100
R63 160
U8B LM319
R119 2.7K
R157 100
LF 3/4T (9)
R71 499 1%
R69 249 1%
R80 10K
C27 .1UF
R84 5.1K
R158 100
LF 3/4T (9)
R118 100
U32D 74LS32
U22B CA3054
R160 100
R159 2.7K
-15V
3/4T (5)
R114 200
R115 200
U17A LM319
(3) +0.75V
C34 .1UF
CR3 1N4531
CR2 1N4531
CR4 1N4531
(3) SQ RCVR OUT
R85 200
U17B LM319
(3) -0.75V
R78 200
R86 5.1K
R82 10K 1%
R61 10K 1%
AZ MIXER OUT (5)
NAZ RCVR OUT (5) (9)
U6B TL082
LF-NAZ (9)
LF-NAZ (9)
(2) LFNRZMF
(9) FLT NRZ
U16C HI-201
R67 6.8K
C23 .1UF
R68 10K 1%
R135 100
R137 100
R136 100
AQ2B CA3046B
AQ2A CA3046B
R133 100
U30F 74LS04
U6A TL082
R90 1.5K 1%
R100 1.5K 1%
R72 6.8K
CR5 1N4531
CR6 1N4531
U16B HI-201
AQ2C CA3046B
(2) FNRZ
(3) CR11
(3) CR12
C24 .1UF
FLT-NAZ (7)
R102 4.7K
R103 10K
R104 3.3K
VCC
+5V
+V
+15V
-V
-15V
GND
D.GND
A.GND
VAF054-1
SIZE B
CAGE CODE 20747
DOCUMENT NO. SD 600-0536
REV. A
SHEET NO. 4 OF 9

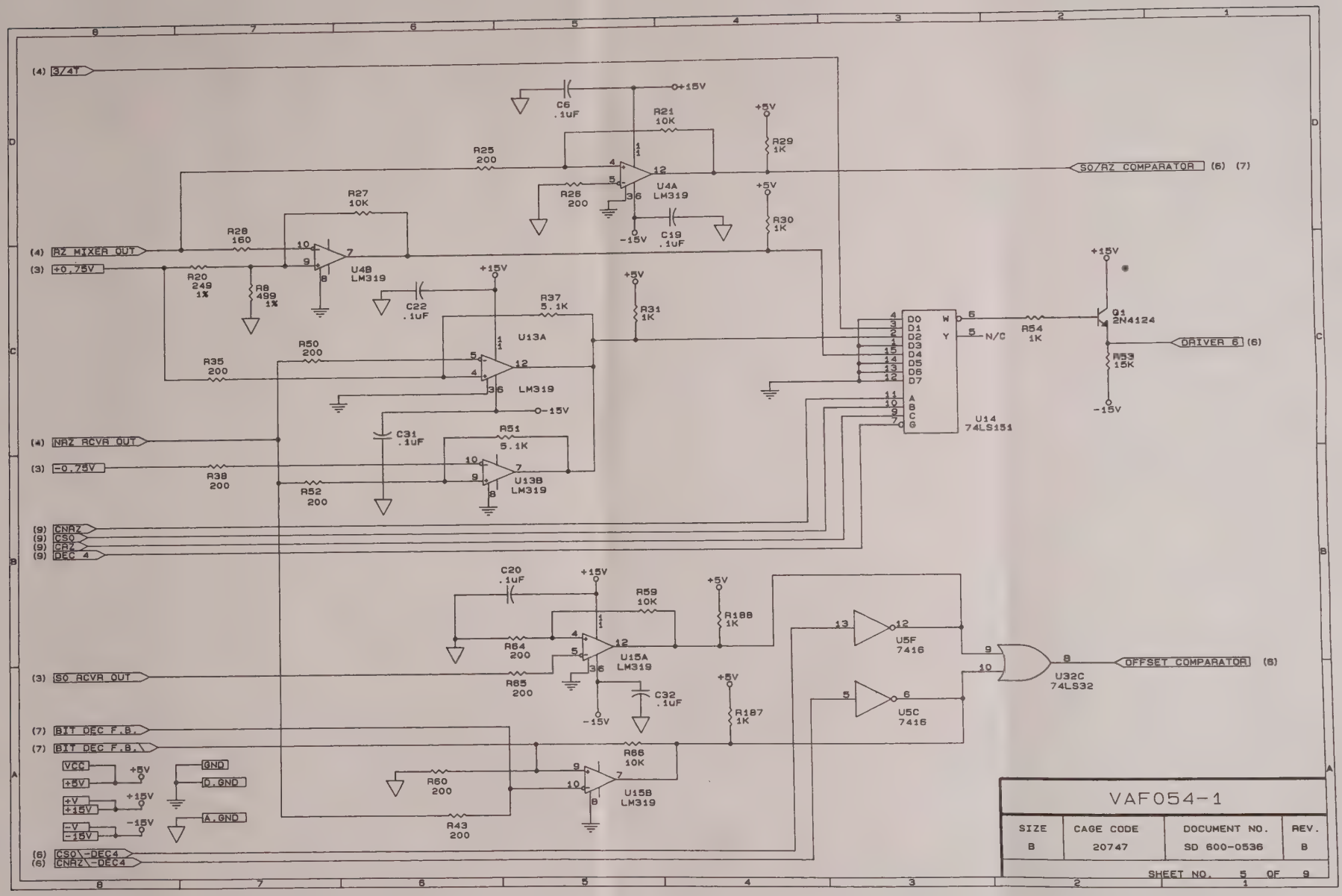

VAF054-1			
SIZE	CAGE CODE	DOCUMENT NO.	REV.
B	20747	SD 600-0536	B

SHEET NO. 5 OF 9

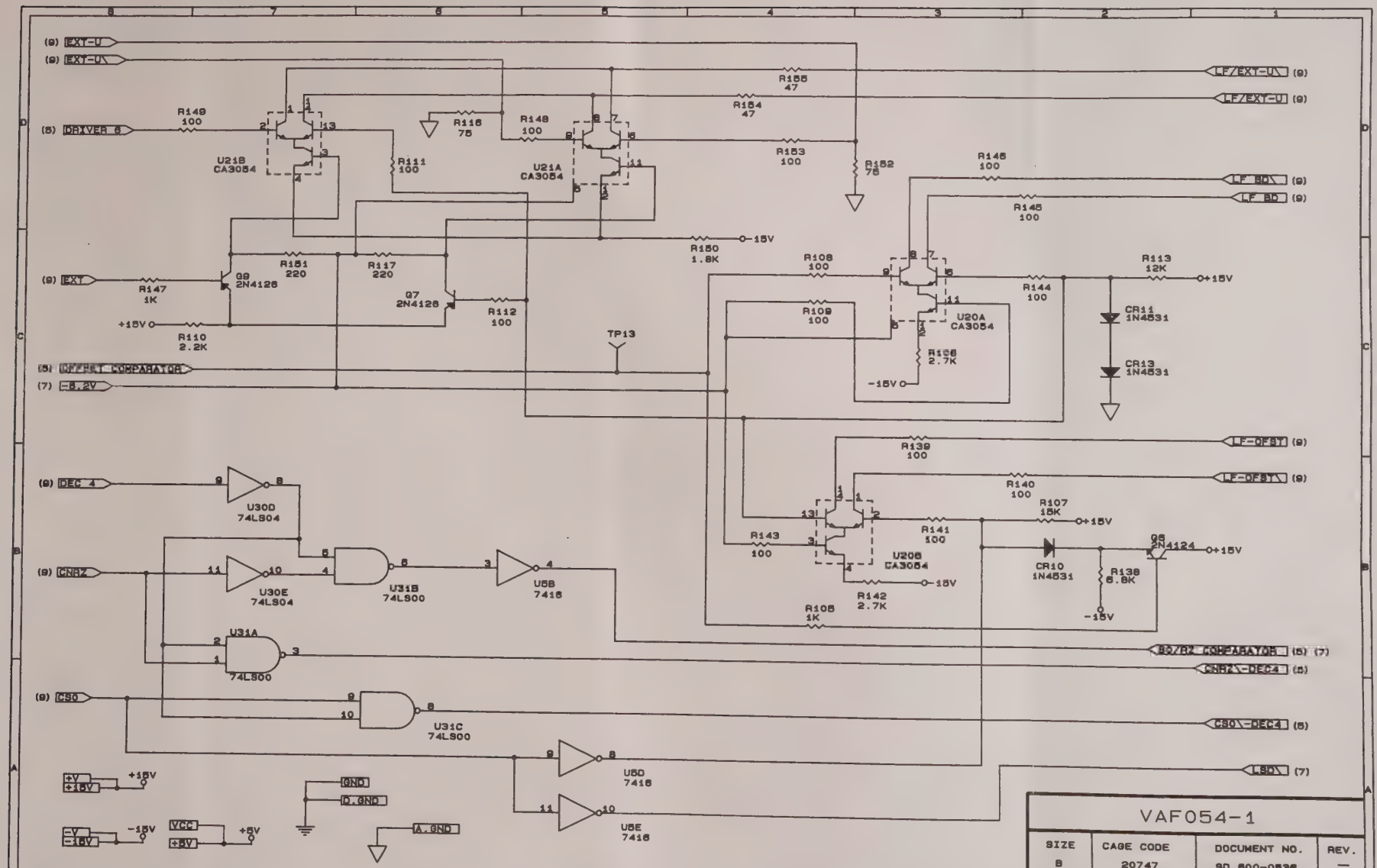

VAF054-1

SIZE	CAGE CODE	DOCUMENT NO.	REV.
B	20747	SD 600-0536	—

SHEET NO. 6 OF 9

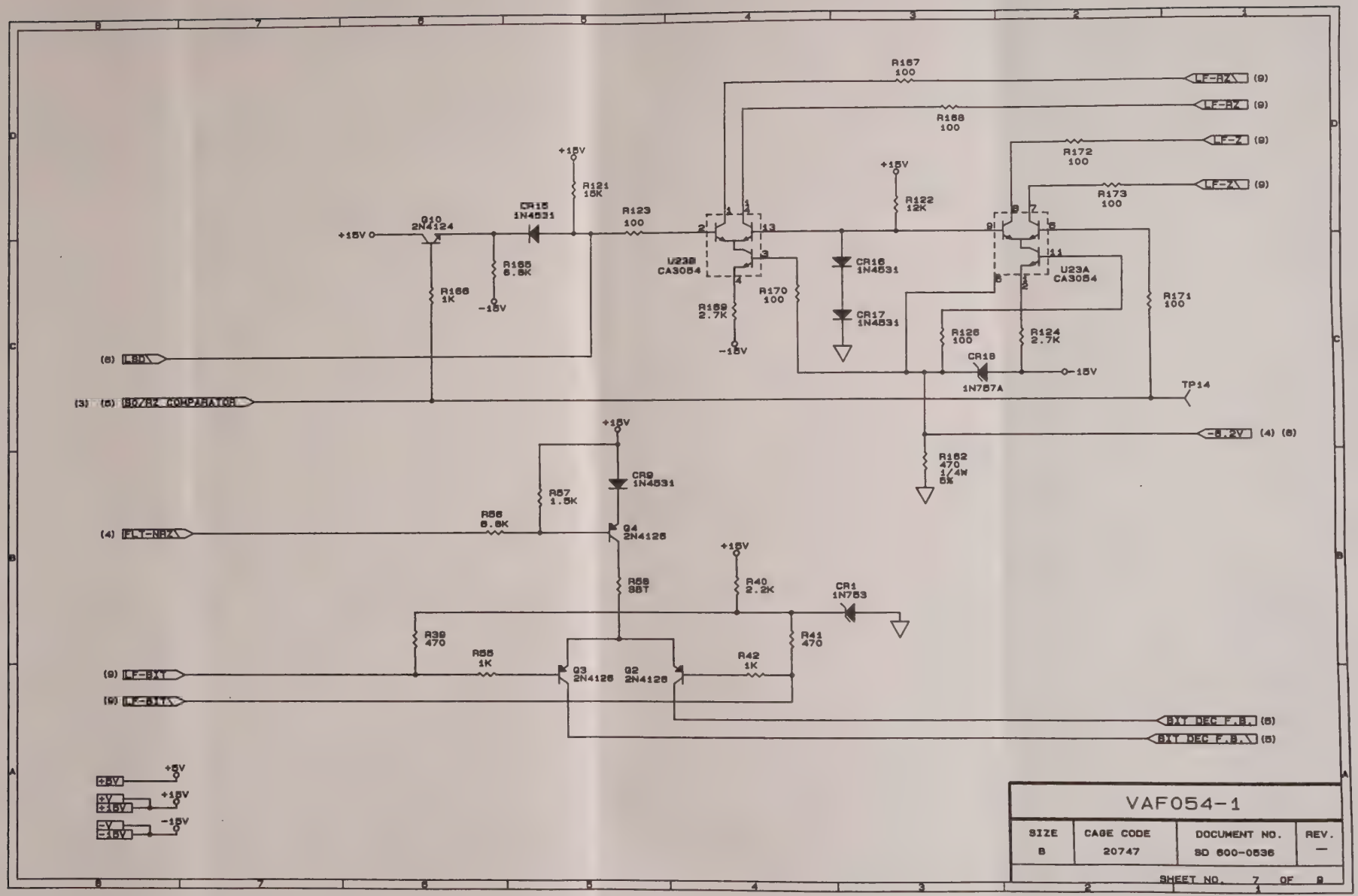

VAF054-1			
SIZE B	CAGE CODE 20747	DOCUMENT NO. SD 600-0536	REV. —
SHEET NO. 7 OF 9			

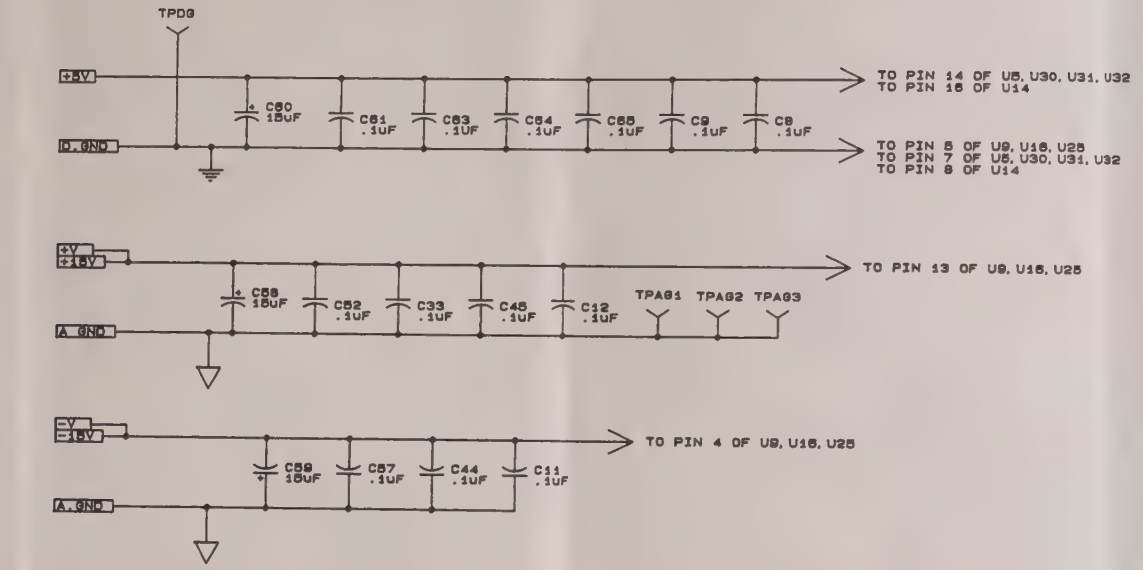

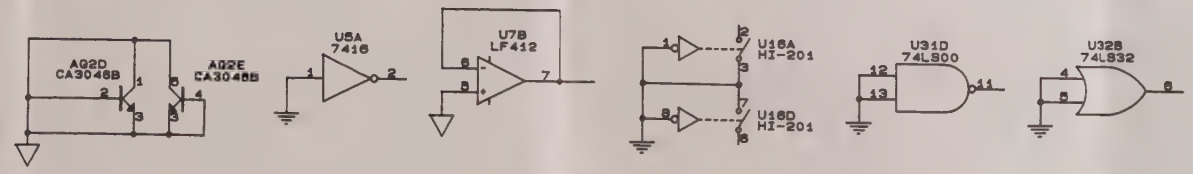

VAF054-1			
SIZE B	CAGE CODE 20747	DOCUMENT NO. SD600-0536	REV. —
		SHEET NO. 8 OF 8	

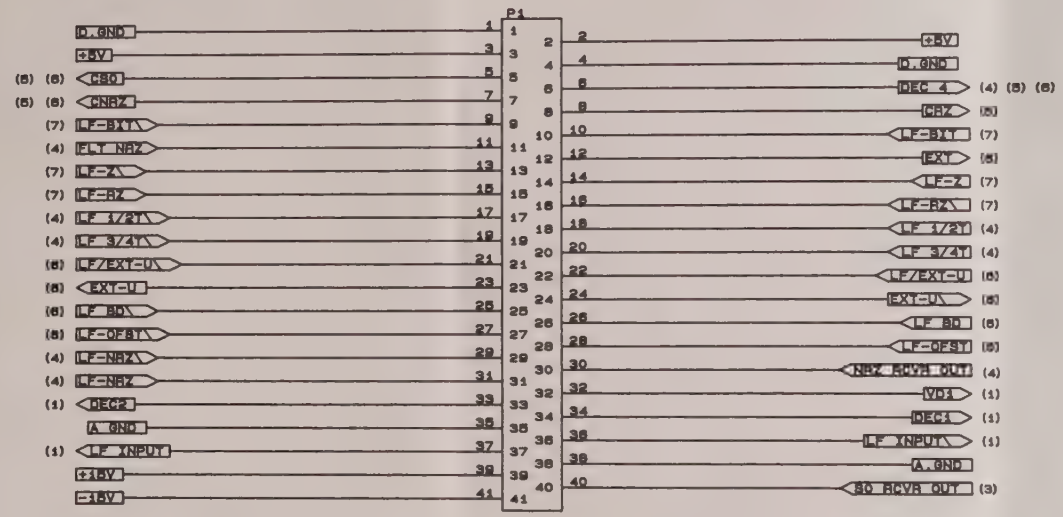

VAF054-1			
SIZE B	CAGE CODE 20747	DOCUMENT NO. BD 800-0536	REV. —
SHEET NO. 9 OF 9			

NOTICE TO PERSONS RECEIVING THIS DOCUMENT. THIS DOCUMENT IS THE EXCLUSIVE PROPERTY OF AYDIN CORPORATION. CONTAINS PROPRIETARY AND PRIVATE INFORMATION OF THE COMPANY AND IS DELIVERED ON THE EXPRESS CONDITION THAT IT IS NOT TO BE DISCLOSED OR REPRODUCED (IN WHOLE OR IN PART) NOR USED FOR MANUFACTURE BY ANYONE OTHER THAN THE AYDIN CORPORATION AND FURTHER NO RIGHT IS GRANTED TO DISCLOSE OR SO USE ANY INFORMATION CONTAINED IN THIS DOCUMENT

REVISIONS					
ZONE	LTR	DESCRIPTION		DATE	APPROVED
	A	REV PER ECN #17532	DH	5-29-89	5/7/89
	B	REVISED PER ECO 17808	S.H	7/24/89	
	C	REVISED PER ECO 18102		8-25-89	
	C1	REVISED PER ECO 19527			

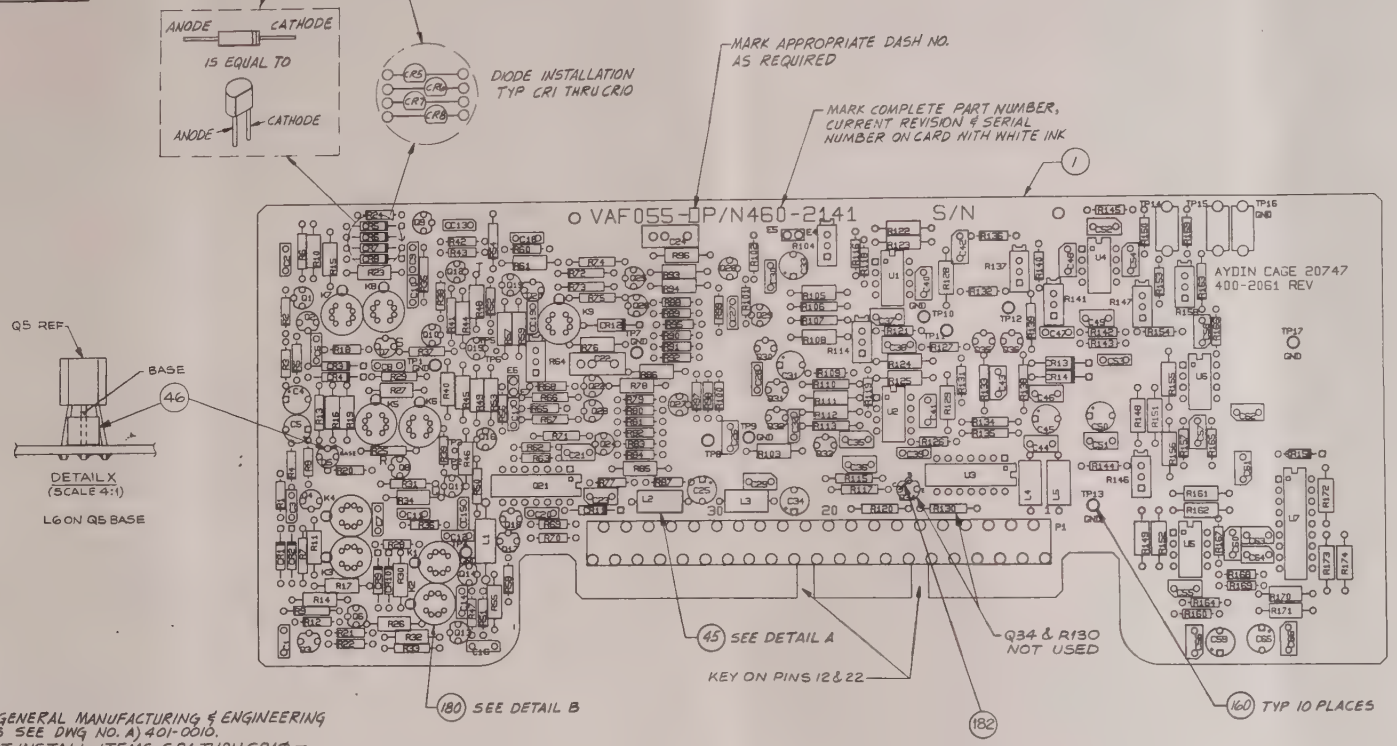

NOTES:

1. FOR GENERAL MANUFACTURING & ENGINEERING NOTES SEE DWG NO. A) 401-0010.
2. DO NOT INSTALL ITEMS CR1 THRU CR10 — (TO BE INSTALLED DURING TEST).
3. MASK MOUNTING HOLES OF DIODES CR1 THRU CR10 AND R10, R11, R14, R15, R16, R17, R19, R23, R26, R27, R30 & R32 PRIOR TO WAVE SOLDERING BOARD.
4. 4-PIN HEADER, ITEM 37, TO BE SEPERATED INTO QTY 2-2 PIN HEADERS AND INSTALLED AS E4-E5 & E6-E7.
5. ITEM 51 (P2 & P3) TO BE INSTALLED IN E4-E5 & E6-E7.
6. R56 & R60 MAY BE CHANGED IN VALUE FROM 10K TO A NOMINAL VALUE WHICH WILL BE DETERMINED BY TEST IF NECESSARY USING ATP 297-1246.

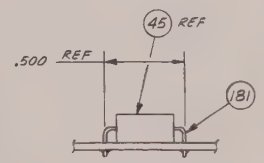

DETAIL A
TYP L2-L5
(NO SCALE)

DETAIL B
TYP K1-K9
(NO SCALE)

FOR PARTS LIST SEE PL460-2141-501

DRAWN W. WARD	DATE 4-12-89
CHECKED K. HOUSEAL	4-19-89
DRAFTING	
ENGINEER	4-19-89
MFG	4-18-89
APPROVED T. KITCHEY	4-17-89
APPROVED	4-19-89

AYDIN MONITOR SYSTEMS
FORT WASHINGTON, PENNA.

CARD ASSEMBLY
VAF055

NEXT ASSY	USED ON
	1245-8000
APPLICATION	

SIZE	CODE IDENT NO.		REV
D	20747	AD460-2141-501	C1
SCALE 2/1		SHEET 1 OF 1	

REVISIONS			
REV	DESCRIPTION	DATE	APPROVED
A	REV PER ECO 17532 D.H.	5-24-89	
A1	ADDED "E6" REF DES. TO ITEM 37 SLH	6-20-89	
B	REVISED PER ECO 17808	7/24/89	
C	REVISED PER ECO 18102	8-25-89	
C1	REV PER ECO 18673	12/7/89	
D	REV PER ECO 22333	10-1-91	D. DUCKETT

NOTES:

1. DO NOT PREP 104-530-018 TO BE INSTALLED BY TEST DURING TEST.

		CONTRACT NO. 1245-8000	AYDIN COMPUTER AND MONITOR Division, 700 DRESHER ROAD HORSHAM, PA 19044
		DRAWN J.S. GOODOLF 2-17-89 DATE	PARTS LIST VAF055-1
		CHECKED WK HOUSEAL 4-19-89	
		DRAFTING Stucker	
		APPROVED ENGR 4-19-89	SIZE A / CAGE CODE 20747 / DWG NO PL460-2141-501 / REV D.
NEXT ASSY	USED ON	APPROVED	
APPLICATION		APPROVED 4-19-89	SCALE ~ / SHEET 1 OF 6

800-0018E

PARTS LIST	DESIGN ACTIVITY IDENTIFICATION AYDIN COMPUTER AND MONITOR DIVISION HORSHAM, PA. 19044	CONTRACT NO.	CAGE CODE 20747	PL460-2141-501	REV D

LIST TITLE CARD ASSY VAF055-1	SUBCONTRACT NO.		SHEET NO. 3

FIND NO	QTY REQ	U/M	CAGE CODE	DOCUMENT NUMBER	PART OR IDENTIFYING NUMBER	NOMENCLATURE OR DESCRIPTION	NOTES
039	1	EA	86684	139-209-002	CA3046	TRANS ARRAY	Q21
040	9	EA	11532	106-067-006	732D-18	RLY SEN DPDT T05 18V	K1 K2 K3 K4 K5 K6 K7 K8 K9
044	1	EA	96906	135-126-1R5	MS75088-3	INDUCTOR FIXED 1.5 UH	L1
045	4	EA	29251	135-003-002	ETA-BF60-1H0/1	FERRITE BD .2X.4 IN	L2 L3 L4 L5
046	1	EA	02114	135-004-001	56 590 65/3B	FERRITE BEAD	L6
050	1	EA	91662	108-203-041	7022-041-000001	CONN FING BLOC 41 POS	P1
051	2	EA	22526	108-718-001	65474-010	JUMPER PLUG	P2 P3
055	5	EA	81349	103-308-001	2N3906	TRANS SIL PNP TO-92	Q1 Q5 Q6 Q7 Q8
056	11	EA	81349	103-437-001	2N5770	TRANS SIL NPN TO-92	Q2 Q3 Q4 Q15 Q16 Q19 Q20 Q22 Q23 Q25 Q26
058	4	EA	07263	103-438-001	2N5771	TRANS UHS PNP TO-92	Q9 Q14 Q17 Q18
059	14	EA	03508	103-319-004	2N3904	TRANS SIL NPN TO-92	Q10 Q11 Q12 Q13 Q24 Q27 Q28 Q29 Q30 Q31 Q32 Q33 Q35 Q36
070	12	EA	91637	100-038-103	CCF-50-1002-F	MTFLM 10K .125W 5%	R1 R3 R4 R22 R28 R29 R35 R42 R51 R56 R60 R167
071	24	EA	91637	100-038-101	CFF-50-1000-F	MTFLM 100 OHM.125W 5%	R2 R8 R12 R18 R38 R43 R47 R58 R65 R68 R72 R73 R121 R126 R127 R136 R143 R145 R160 R164 R165 R166 R168 R169
072	6	EA	91637	100-038-201	CCF-50-2000-F	MTFLM 200 OHM.125W 5%	R5 R21 R24 R39 R52 R87
073	10	EA	91637	100-037-152	CCF-07-152-J	MTFLM 1.5K .25W 5%	R6 R9 R13 R25 R31 R33 R37 R41 R54 R71

PARTS LIST	DESIGN ACTIVITY IDENTIFICATION AYDIN COMPUTER AND MONITOR DIVISION HORSHAM, PA. 19044	CONTRACT NO.	CAGE CODE 20747	 PL460-2141-501	REV D

LIST TITLE CARD ASSY VAF055-1	SUBCONTRACT NO.		SHEET NO. 5

FIND NO	QTY REQ	U/M	CAGE CODE	DOCUMENT NUMBER	PART OR IDENTIFYING NUMBER	NOMENCLATURE OR DESCRIPTION	NOTES
108	17	EA	91637	100-038-102	CCF-50-1001-F	MTFLM 1K .125W 5%	R79 R80 R82 R83 R85 R88 R89 R90 R91 R100 R101 R117 R131 R132 R144 R150 R159
109	4	EA	91637	100-038-470	CCF-50-47R0-F	MTFLM 47 OHM .125W 5%	R81 R84 R92 R95
110	1	EA	81349	100-255-23R7	RNC55H23R7F	MTFLM 23.4 OHM .1W 1%	R93
111	2	EA	91637	100-038-361	CCF-50-3600-F	MTFLM 360 OHM.125W 5%	R97 R99
112	2	EA	81349	100-255-15R0	RNC55H15R0F	MTFLM 15 OHM .1W 1%	R94 R96
113	2	EA	11502	100-038-202	RG1/8-2K-5%	MTFLM 2K .125W 5%	R98 R102
114	5	EA	81349	100-255-1002	RNC55H1002F	MTFLM 10K .1W 1%	R103 R129 R149 R151 R162
115	2	EA	32997	101-121-308	3292X-1-202	CERMT POT 2K OHM .5W 10%	R104 R114
116	8	EA	81349	100-255-2001	RNC55H2001F	MTFLM 2K .1W 1%	R105 R108 R111 R112 R122 R123 R124 R125
118	4	EA	91637	100-037-202	CCF-07-202-J	MTFLM 2K .25W 5%	R106 R107 R110 R113
119	4	EA		100-038-681	CCF-50-6800-F	MTFLM 680 OHM.125W 5%	R133 R134 R135 R138
120	5	EA	91637	100-038-153	CCF-50-1502-F	MTFLM 15K .125W 5%	R109 R116 R140 R153 R157
122	1	EA	91637	100-038-472	CCF-50-4701-F	MTFLM 4.7K .125W 5%	R115
123	2	EA	91637	100-038-511	CCF-50-5100-F	MTFLM 510 OHM.125W 5%	R118 R119
124	1	EA	91637	100-037-100	CCF-07-100-J	MTFLM 10 OHM .25W 5%	R120
125	3	EA	81349	100-255-2002	RNC55H2002F	MTFLM 20K .1W 1%	R128 R152 R155
127	2	EA	32997	101-121-309	3292X-1-502	CERMT POT 5K OHM .5W 10%	R137 R158
129	2	EA	32997	101-121-313	3296X-1-503	CERMT POT 50K OHM .5W 10%	R141 R147
131	2	EA	91637	100-038-473	CCF-50-4702-F	MTFLM 47K .125W 5%	R142 R154

REVISIONS				
ZONE	LTR	DESCRIPTION	DATE	APPROVED
	A	REVISED PER ECO NO: 17808	7/25/89	L. KOCHERSPERGER
	B	REVISED PER ECO NO: 19448	5/1/90	

VAF055.S00
COVER SHEET

VAF055.S01
VARIABLE ACTIVE FILTER

VAF055.S02
SUMMING & AMPLIFIERS

VAF055.S03
LOW PASS & NOTCH FILTERS
VOLTAGE SET

VAF055.S04
RELAY DRIVERS
& POWER DISTRIBUTION

VAF055.S05
I/O CONNECTOR

SHEET	46	47	48	49	50	51	52	53	54	55	56	57	58	59	60
REV.															
SHEET	31	32	33	34	35	36	37	38	39	40	41	42	43	44	45
REV.															
SHEET	16	17	18	19	20	21	22	23	24	25	26	27	28	29	30
REV.															
SHEET	1	2	3	4	5	6	7	8	9	10	11	12	13	14	15
REV.	A	B	A	A	—										

460-2141
NEXT ASSY.

1245-80
USED ON

APPLICATION

DRAWN	DATE
W.K.HOUSEAL	4-13-89
CHECKED	
DRAFTING	
ENGINEER	
APPROVED	
MAGNETIC MEDIA	

AYDIN COMPUTER & MONITOR DIVISION
700 DRESHER ROAD
HORSHAM, PA
19044

VAF055
COVER SHEET

SIZE	CAGE CODE	DOCUMENT NO.	REV.
B	20747	SD600-0537	B

SHEET NO. 00 OF 05

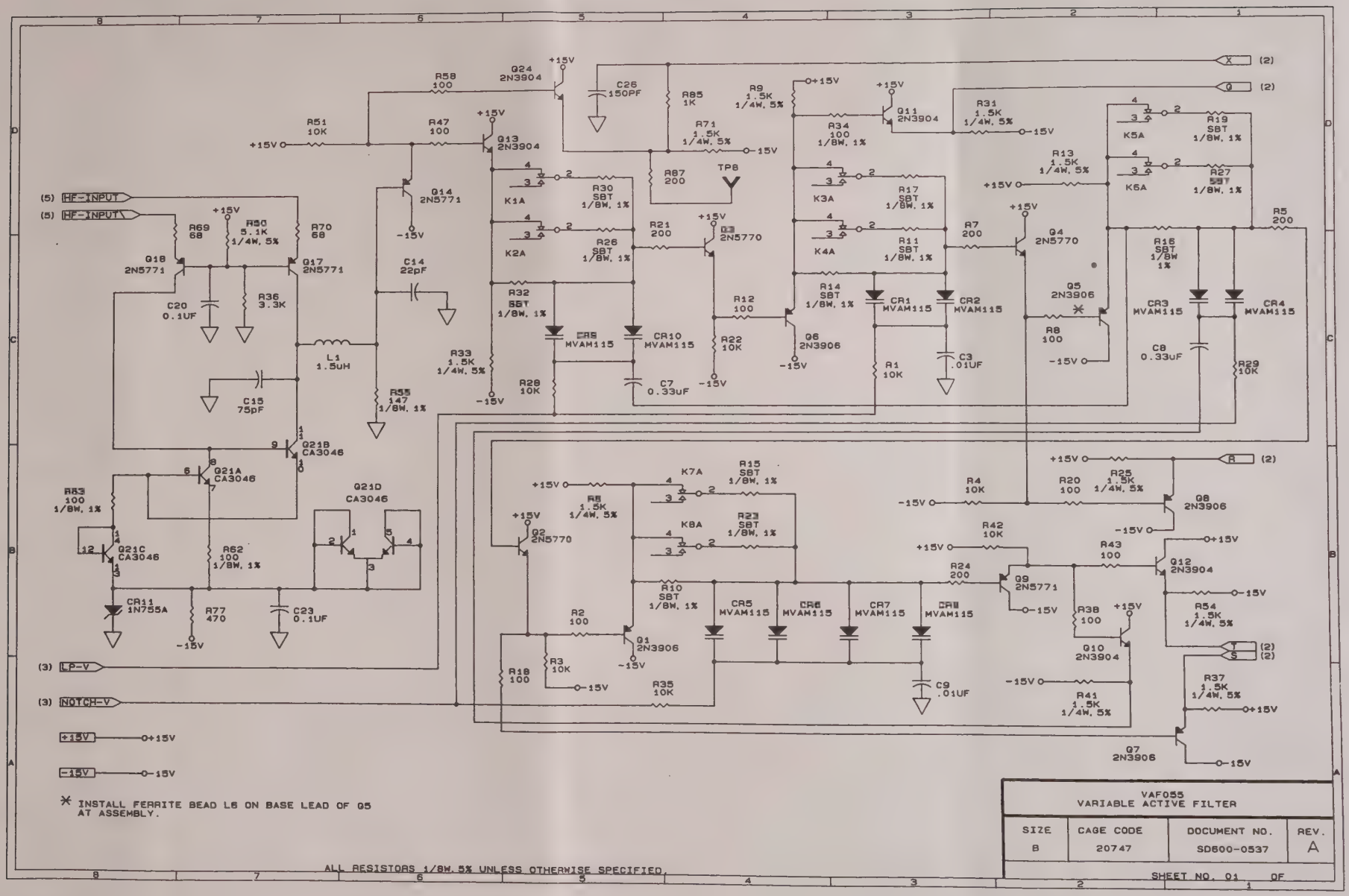
(5) HF-INPUT
(5) HF-INPUT
(3) LP-V
(3) NOTCH-V
+15V
-15V
(2) X
(2) Y
(2) R
(2) T
(2) S
Q24 2N3904
Q13 2N3904
Q14 2N5771
Q18 2N5771
Q17 2N5771
Q21A CA3046
Q21B CA3046
Q21C CA3046
Q21D CA3046
Q2 2N5770
Q3 2N5770
Q4 2N5770
Q5 2N3906
Q6 2N3906
Q7 2N3906
Q8 2N3906
Q9 2N5771
Q10 2N3904
Q11 2N3904
Q12 2N3904
Q1 2N3906
CR1 MVAM115
CR2 MVAM115
CR3 MVAM115
CR4 MVAM115
CR5 MVAM115
CR6 MVAM115
CR7 MVAM115
CR8 MVAM115
CR10 MVAM115
CR11 1N755A
K1A
K2A
K3A
K4A
K5A
K6A
K7A
K8A
TP8
L1 1.5uH
C7 0.33uF
C8 0.33uF
C9 .01uF
C14 22pF
C15 75pF
C20 0.1UF
C23 0.1UF
C26 150PF
C3 .01UF
R1 10K
R2 100
R3 10K
R4 10K
R5 200
R7 200
R8 100
R10 SBT 1/8W, 1%
R11 SBT 1/8W, 1%
R12 100
R13 1.5K 1/4W, 5%
R14 SBT 1/8W, 1%
R15 SBT 1/8W 1%
R17 SBT 1/8W, 1%
R18 100
R19 SBT 1/8W, 1%
R20 100
R21 200
R22 10K
R23 SBT 1/8W, 1%
R24 200
R25 1.5K 1/4W, 5%
R26 SBT 1/8W, 1%
R27 SBT 1/8W, 1%
R28 10K
R29 10K
R30 SBT 1/8W, 1%
R31 1.5K 1/4W, 5%
R32 SBT 1/8W, 1%
R33 1.5K 1/4W, 5%
R34 100 1/8W, 1%
R35 10K
R36 3.3K
R37 1.5K 1/4W, 5%
R38 100
R41 1.5K 1/4W, 5%
R42 10K
R43 100
R47 100
R50 5.1K 1/4W, 5%
R51 10K
R54 1.5K 1/4W, 5%
R55 147 1/8W, 1%
R58 100
R62 100 1/8W, 1%
R63 100 1/8W, 1%
R69 68
R70 68
R71 1.5K 1/4W, 5%
R77 470
R85 1K
R87 200
R9 1.5K 1/4W, 5%
R5 1.5K 1/4W, 5%
* INSTALL FERRITE BEAD L6 ON BASE LEAD OF Q5 AT ASSEMBLY.
ALL RESISTORS 1/8W, 5% UNLESS OTHERWISE SPECIFIED.
VAF055
VARIABLE ACTIVE FILTER
SIZE B
CAGE CODE 20747
DOCUMENT NO. SD600-0537
REV. A
SHEET NO. 01 OF

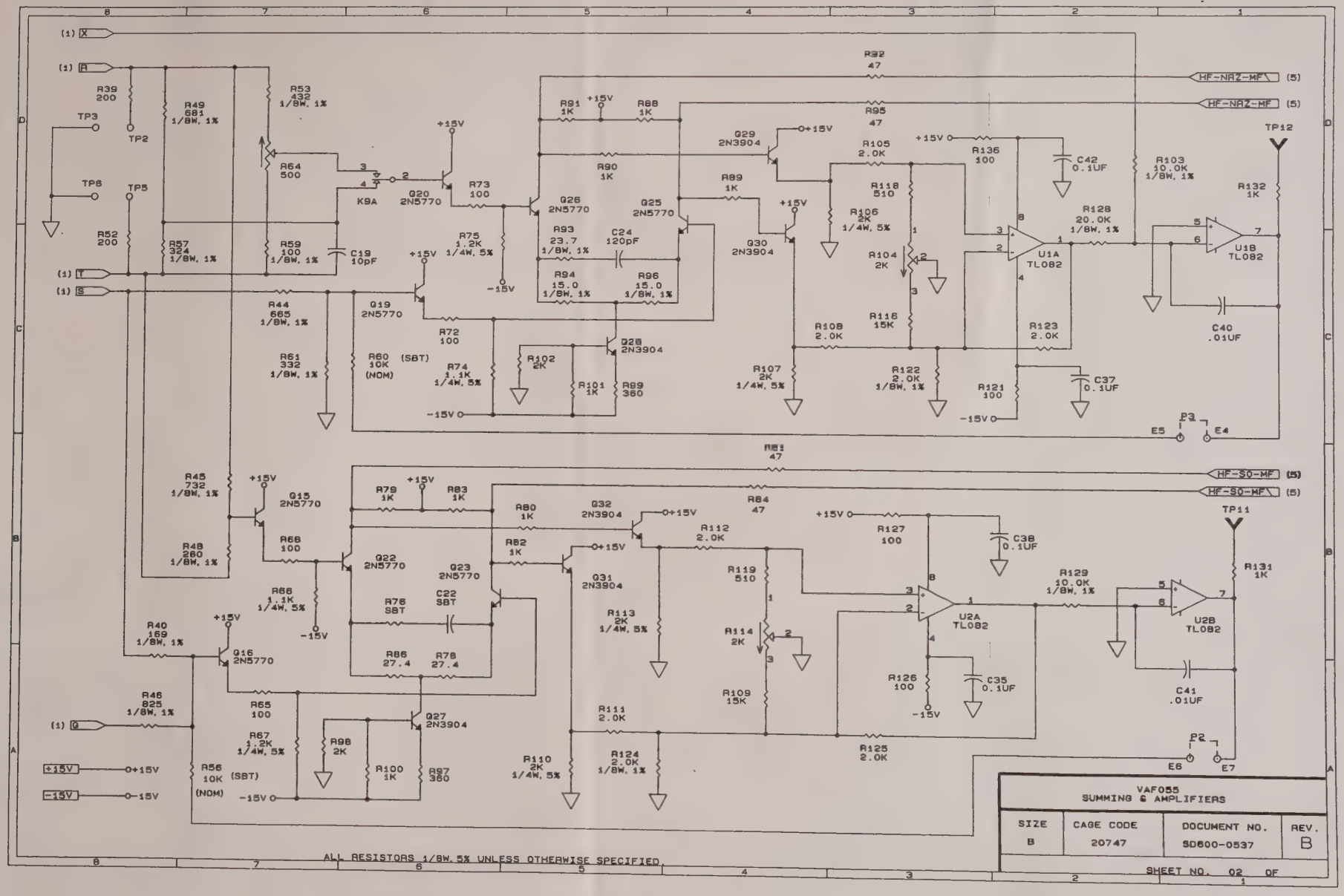
(1) X
(1) A
(1) T
(1) S
(1) Q
TP3
TP2
TP6
TP5
TP12
TP11
R39 200
R49 681 1/8W, 1%
R53 432 1/8W, 1%
R64 500
K9A
R52 200
R57 324 1/8W, 1%
R59 100 1/8W, 1%
C19 10pF
R44 665 1/8W, 1%
R61 332 1/8W, 1%
R60 10K (NOM)
R74 1.1K 1/4W, 5%
R72 100
R73 100
R75 1.2K 1/4W, 5%
Q20 2N5770
Q19 2N5770
Q28 2N3904
R102 2K
R101 1K
R89 360
R91 1K
R88 1K
R90 1K
R89 1K
R93 23.7 1/8W, 1%
C24 120pF
R94 15.0 1/8W, 1%
R96 15.0 1/8W, 1%
Q26 2N5770
Q25 2N5770
Q29 2N3904
Q30 2N3904
R105 2.0K
R106 2K 1/4W, 5%
R118 510
R104 2K
R108 2.0K
R116 15K
R107 2K 1/4W, 5%
R122 2.0K 1/8W, 1%
R121 100
R123 2.0K
R136 100
C42 0.1UF
C37 0.1UF
R128 20.0K 1/8W, 1%
R103 10.0K 1/8W, 1%
R132 1K
U1A TL082
U1B TL082
C40 .01UF
R32 47
R95 47
R81 47
R84 47
HF-NAZ-MF (5)
HF-SO-MF (5)
P3
E5
E4
R45 732 1/8W, 1%
R48 280 1/8W, 1%
R68 100
R66 1.1K 1/4W, 5%
R40 169 1/8W, 1%
R46 825 1/8W, 1%
R65 100
R67 1.2K 1/4W, 5%
R56 10K (SBT) (NOM)
Q15 2N5770
Q16 2N5770
Q22 2N5770
Q23 2N5770
Q27 2N3904
R79 1K
R83 1K
R80 1K
R82 1K
R76 SBT
C22 SBT
R86 27.4
R78 27.4
R98 2K
R100 1K
R97 360
R110 2K 1/4W, 5%
Q32 2N3904
Q31 2N3904
R112 2.0K
R113 2K 1/4W, 5%
R111 2.0K
R124 2.0K 1/8W, 1%
R119 510
R114 2K
R109 15K
R125 2.0K
R127 100
R126 100
C38 0.1UF
C35 0.1UF
R129 10.0K 1/8W, 1%
R131 1K
U2A TL082
U2B TL082
C41 .01UF
P2
E6
E7
+15V
-15V
VAF055
SUMMING & AMPLIFIERS
SIZE B
CAGE CODE 20747
DOCUMENT NO. SD600-0537
REV. B
SHEET NO. 02 OF
ALL RESISTORS 1/8W, 5% UNLESS OTHERWISE SPECIFIED.

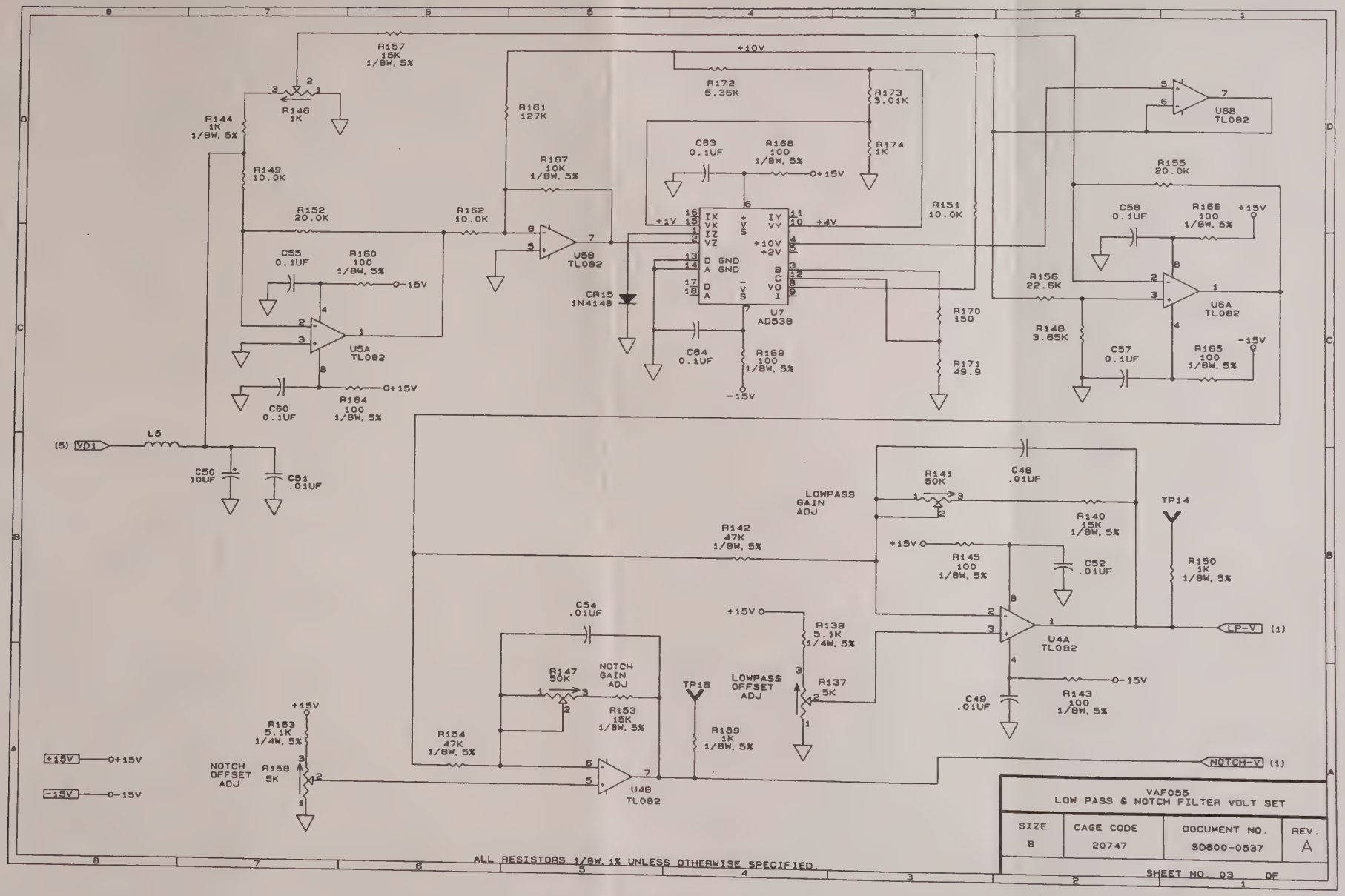
R157
15K
1/8W, 5%
R146
1K
R144
1K
1/8W, 5%
R149
10.0K
R152
20.0K
C55
0.1UF
R160
100
1/8W, 5%
-15V
U5A
TL082
C60
0.1UF
R164
100
1/8W, 5%
+15V
(5) VD1
L5
C50
10UF
C51
.01UF
R161
127K
R167
10K
1/8W, 5%
R162
10.0K
U5B
TL082
CR15
1N4148
+10V
R172
5.36K
R173
3.01K
R174
1K
C63
0.1UF
R168
100
1/8W, 5%
+15V
+1V
+4V
U7
AD538
C64
0.1UF
R169
100
1/8W, 5%
-15V
R151
10.0K
R170
150
R171
49.9
U6B
TL082
R155
20.0K
C58
0.1UF
R166
100
1/8W, 5%
+15V
R156
22.6K
U6A
TL082
R148
3.65K
C57
0.1UF
R165
100
1/8W, 5%
-15V
R141
50K
C48
.01UF
LOWPASS
GAIN
ADJ
R140
15K
1/8W, 5%
TP14
R142
47K
1/8W, 5%
+15V
R145
100
1/8W, 5%
C52
.01UF
R150
1K
1/8W, 5%
U4A
TL082
LP-V (1)
C54
.01UF
R147
50K
NOTCH
GAIN
ADJ
R153
15K
1/8W, 5%
+15V
R139
5.1K
1/4W, 5%
LOWPASS
OFFSET
ADJ
R137
5K
TP15
R159
1K
1/8W, 5%
C49
.01UF
R143
100
1/8W, 5%
-15V
R163
5.1K
1/4W, 5%
+15V
NOTCH
OFFSET
ADJ
R158
5K
R154
47K
1/8W, 5%
U4B
TL082
NOTCH-V (1)
+15V
-15V
ALL RESISTORS 1/8W, 1% UNLESS OTHERWISE SPECIFIED.
VAF055
LOW PASS & NOTCH FILTER VOLT SET
SIZE
B
CAGE CODE
20747
DOCUMENT NO.
SD600-0537
REV.
A
SHEET NO. 03 OF

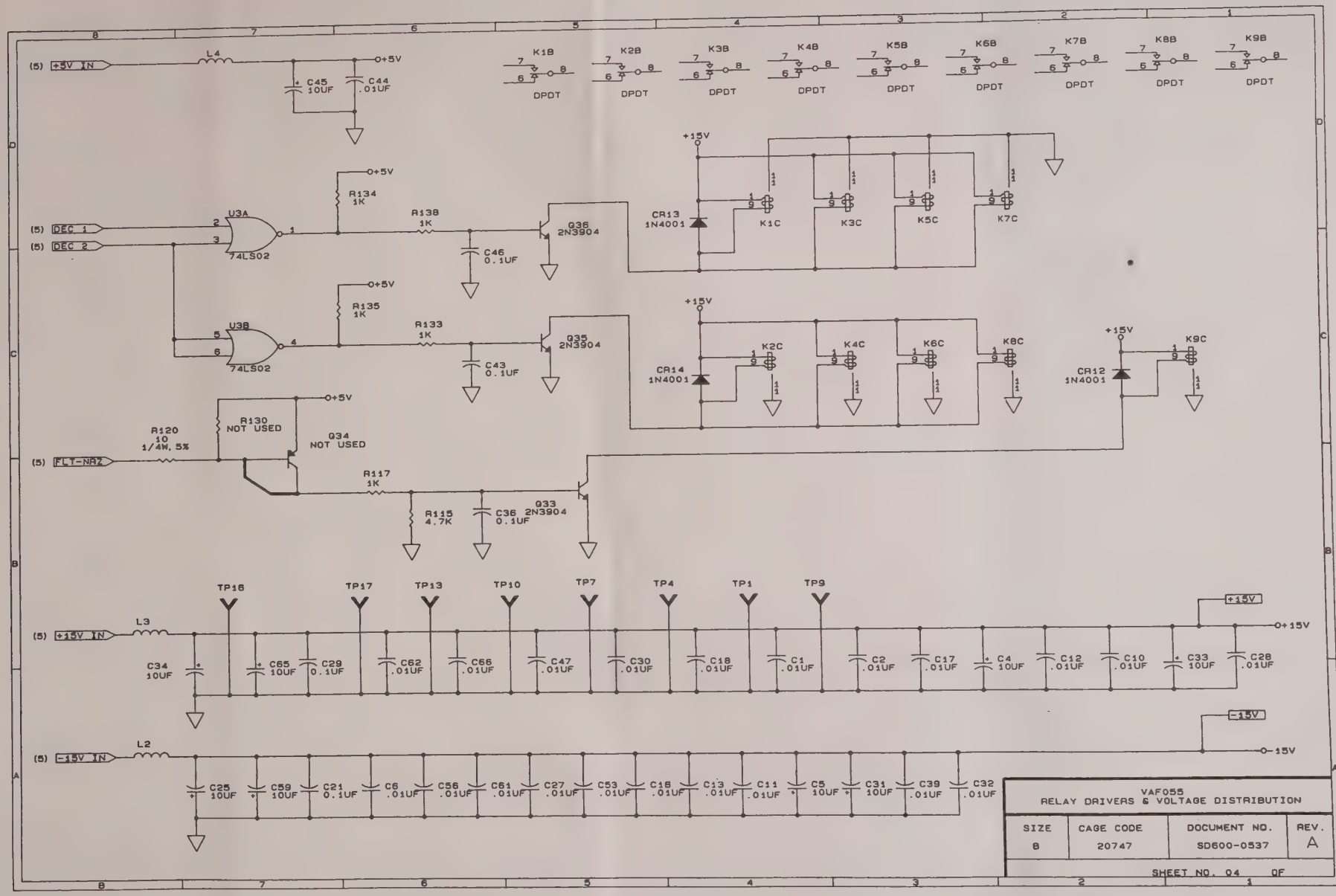

VAF055 RELAY DRIVERS & VOLTAGE DISTRIBUTION			
SIZE B	CAGE CODE 20747	DOCUMENT NO. SD600-0537	REV. A
SHEET NO. 04 OF			

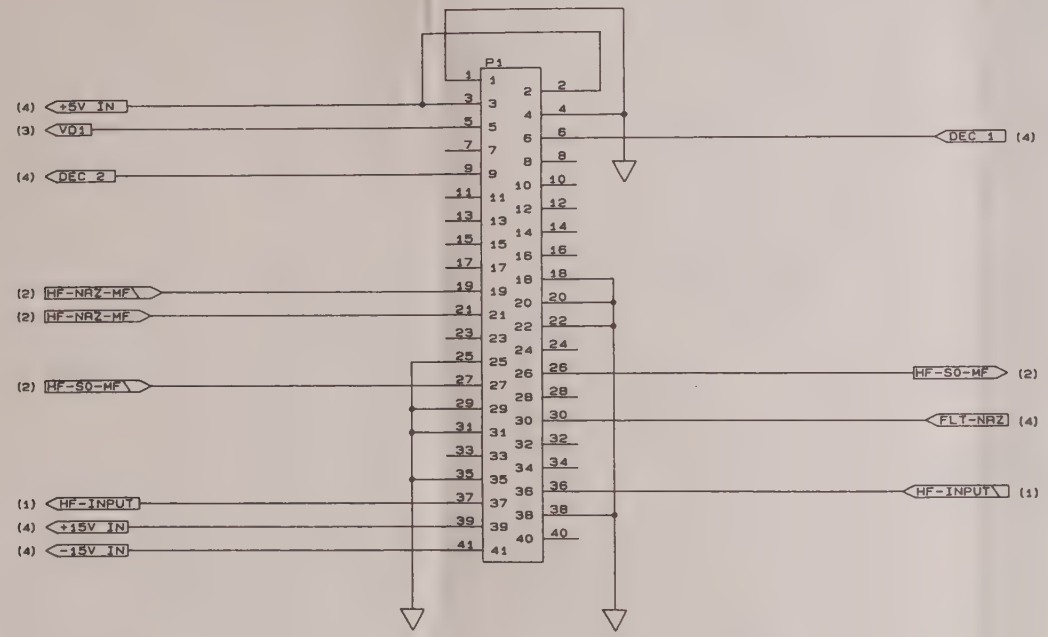

SPARES

VAF055
I/O CONNECTOR

SIZE	CAGE CODE	DOCUMENT NO.	REV.
B	20747	SD600-0537	— —

SHEET NO. 05 OF

NOTICE TO PERSONS RECEIVING THIS DOCUMENT. THIS DOCUMENT IS THE EXCLUSIVE PROPERTY OF AYDIN CORPORATION. CONTAINS PROPRIETARY AND PRIVATE INFORMATION OF THE COMPANY AND IS DELIVERED ON THE EXPRESS CONDITION THAT IT IS NOT TO BE DISCLOSED OR REPRODUCED (IN WHOLE OR IN PART) NOR USED FOR MANUFACTURE BY ANYONE OTHER THAN THE AYDIN CORPORATION AND FURTHER NO RIGHT IS GRANTED TO DISCLOSE OR SO USE ANY INFORMATION CONTAINED IN THIS DOCUMENT

REVISIONS				
ZONE	LTR	DESCRIPTION	DATE	APPROVED
	A	REV PER ECN # 17535 DH	5-25-85	R. Koch
	B	REV PER ECO 23197	6/16/92	R. J. Volz

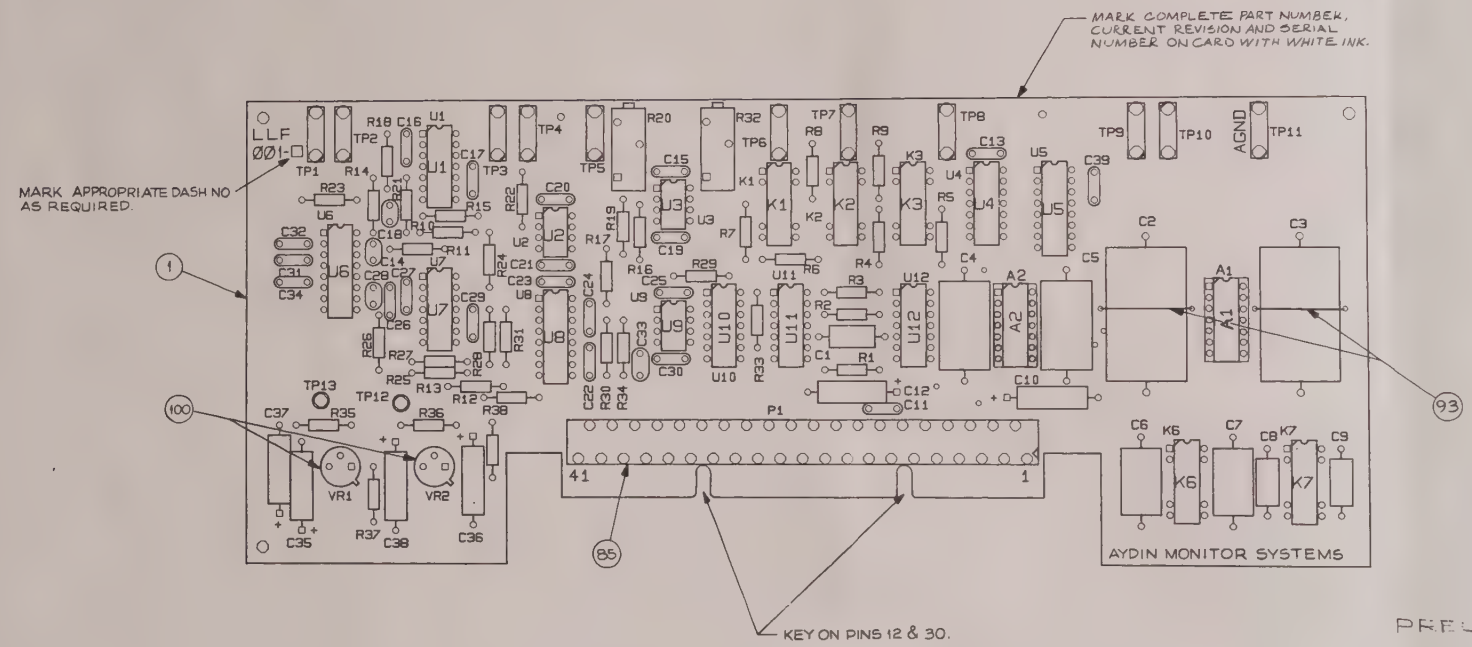

PRELIM

NOTES:

1. FOR GENERAL MANUFACTURING & ENGINEERING NOTES SEE DWG NO. A)401-0010

FOR SCHEMATICS SEE SD600-0538
FOR PARTS LIST SEE PL460-2142-501

DRAWN S. HORDESKI	DATE 2-10-89
CHECKED	13 FEB 89
DRAFTING	2-23-89
ENGINEER	
MFG	
APPROVED	
APPROVED	

AYDIN COMPUTER AND MONITOR Division
700 DRESHER ROAD HORSHAM, PA 19044

CARD ASSEMBLY
LLFØØ1-1

NEXT ASSY	USED ON
	1245-8100
APPLICATION	

SIZE	CODE IDENT NO.		REV
D	20747	AD460-2142-501	B
SCALE 2/1		SHEET 1 OF 1	

REVISIONS			
REV	DESCRIPTION	DATE	APPROVED
A	REV PER ECN # 17535 DH.	5-25-89	[illegible]
A_1	REV PER ECO 18671 KP	12/7/89	[illegible]
B	REV PER ECO 23197	6/12/92	R.S. Volz

		CONTRACT NO.	AYDIN COMPUTER AND MONITOR Division 700 DRESHER ROAD HORSHAM, PA 19044
		DRAWN S.HORDESKI DATE 2-10-89	
		CHECKED J. DOERR 13 FEB 89	PARTS LIST LLFØØ1-1
		DRAFTING [illegible] 3-1-89	
		APPROVED ENGR. T. M Naher MAR 1 89	
	1245-8100	APPROVED MFG [illegible] 89-3-2	SIZE A · CAGE CODE 20747 · DWG NO PL460-2142-501 · REV B
NEXT ASSY	USED ON	APPROVED PROJECT KSVolz 1 MAR 89	
APPLICATION			SCALE · SHEET 1 OF 4

800-0015E

PARTS LIST	DESIGN ACTIVITY IDENTIFICATION: AYDIN COMPUTER AND MONITOR DIVISION, HORSHAM, PA. 19044	CONTRACT NO.	CAGE CODE: 20747	PL460-2142-501	REV: B
LIST TITLE: LLF001-1		SUBCONTRACT NO.			SHEET NO.: 2

FIND NO	QTY REQ	UM	CAGE CODE	DOCUMENT NUMBER	PART OR IDENTIFYING NUMBER	NOMENCLATURE OR DESCRIPTION	NOTES
001	1	EA	20747	400-2062	400-2062	PWB LLF001	
003	2	EA	20747	300-0376-501	300-0376-501	COMPONENT BOARD ASSY	A1 A2
005	1	EA	14752	102-001-102	230B1B102	CAP .001UF 100V 20%	C1
006	2	EA	14752	102-092-1106	650C1A106J	PLYCARB 10UF 5% 50V	C2 C3
007	2	EA	84411	102-015-105	X663F1059.5W2	CAP 1UF 50V 10%	C4 C5
008	2	EA	84411	102-017-104	X663FR10491W18	CAP .1UF 100V 10%	C6 C7
009	2	EA	84411	102-017-103	X663FR10391W18	CAP .01UF 100V 10%	C8 C9
011	6	EA	56289	102-305-156	150D156X0020B2	CAP 15UF 20V 20%	C10 C12 C35 C36 C37 C38
012	18	EA	71590	102-419-104	CK06BX104M	CAP .1UF 100V 20%	C11 C13 C15 C16 C17 C19 C20 C21 C23 C24 C25 C27 C29 C30 C31 C32 C34 C39
013	2	EA	18796	102-417-680	RPE110C0G680J100V	MONO 68PF COG 5% RAD	C14 C28
014	1	EA	18796	102-417-331	RPE110C0G331J100V	MONO 330PF COG 5% RAD	C18
016	1	EA		102-417-332	CRC230C0G332J100	MONO 3.3K PF COG 5%	C26
017	1	EA	81349	102-411-101	CK05BX101K	CAP 100PF 200V 10%	C33
025	5	EA	94696	106-058-022	W171DIP-25	RELAY REED DIP	K1 K2 K3 K6 K7
030	1	EA	81349	100-255-3321	RNC55H3321F	MTFLM 3.32K .1W 1%	R1
031	1	EA	81349	100-255-5902	RNC55H5902F	MTFLM 59K .1W 1%	R2
032	2	EA	80031	100-041-1105	5053YL11M00F	MTFLM 11 MEGOHM 1%	R3 R6
033	2	EA	81349	100-255-2213	RNC55H2213F	MTFLM 221K .1W 1%	R4 R7
034	1	EA	81349	100-255-2212	RNC55H2212F	MTFLM 22.1K .1W 1%	R5
036	1	EA	81349	100-255-2432	RNC55H2432F	MTFLM 24.3K .1W 1%	R8
037	1	EA	81349	100-255-7321	RNC55H7321F	MTFLM 7.32K .1W 1%	R9

PARTS LIST	DESIGN ACTIVITY IDENTIFICATION: AYDIN COMPUTER AND MONITOR DIVISION, HORSHAM, PA. 19044	CONTRACT NO.	CAGE CODE: 20747	PL460-2142-501	REV: B

LIST TITLE: LLF001-1	SUBCONTRACT NO.		SHEET NO.: 3

FIND NO	QTY REQ	UM	CAGE CODE	DOCUMENT NUMBER	PART OR IDENTIFYING NUMBER	NOMENCLATURE OR DESCRIPTION	NOTES
038	1	EA	91637	100-037-472	CCF-07-472-J	MTFLM 4.7K .25W 5%	R10
039	2	EA	81349	100-255-6041	RNC55H6041F	MTFLM 6.04K .1W 1%	R11 R19
041	3	EA	81349	100-255-1002	RNC55H1002F	MTFLM 10K .1W 1%	R12 R16 R29
042	3	EA	81349	100-255-1502	RNC55H1502F	MTFLM 15K .1W 1%	R13 R14 R15
043	1	EA	91637	100-037-101	CCF-07-101-J	MTFLM 100 OHM .25W 5%	R17
044	3	EA	81349	100-255-4991	RNC55H4991F	MTFLM 4.99K .1W 1%	R18 R27 R34
046	2	EA	73138	101-115-103	89WR10K	CERMT POT 10K.75W 10%	R20 R32
047	2	EA	81349	100-255-2492	RNC55H2492F	MTFLM 24.9K .1W 1%	R21 R28
048	1	EA	81349	100-255-4990	RNC55H4990F	MTFLM 499 OHM .1W 1%	R22
049	1	EA	81349	100-255-6191	RNC55H6191F	MTFLM 6.19K .1W 1%	R23
051	2	EA	81349	100-255-1503	RNC55H1503F	MTFLM 150K .1W 1%	R24 R25
052	1	EA	81349	100-255-4750	RNC55H4750F	MTFLM 475 OHM .1W 1%	R26
053	1	EA	81349	100-255-1001	RNC55H1001F	MTFLM 1K .1W 1%	R30
054	1	EA	81349	100-255-5761	RNC55H5761F	MTFLM 5.76K .1W 1%	R31
055	1	EA	11502	100-037-102	RG1/4-1K-5%	MTFLM 1K .25W 5%	R33
056	1	EA	81349	100-255-1210	RNC55H1210F	MTFLM 121 OHM .1W 1%	R35
057	1	EA	81349	100-215-2370	100-215-2370	MTFLM 237 OHM .1W 1%	R36
058	1	EA	81349	100-215-5620	100-215-5620	MTFLM 562 OHM.125W 1%	R37
059	1	EA	81349	100-255-8060	RNC55H8060F	MTFLM 806 OHM .1W 1%	R38
070	2	EA	34335	139-548-002	LM348N	IC OP AMP 14 PIN	U1 U7
071	1	EA	13919	139-1260-105	INA105KP	DIFF AMP UNITY GN 8P	U2
072	2	EA	51640	139-1500-548	AD548KN	OP AMP BIFET LP 8PIN	U3 U9
073	3	EA	01295	139-046-417	SN7417N	HEX BUFFER/DR 14P	U4 U10 U11
074	1	EA	01295	139-198-139	SN74LS139AN	2-4DEC/DEM 16P	U5

PARTS LIST	DESIGN ACTIVITY IDENTIFICATION AYDIN COMPUTER AND MONITOR DIVISION HORSHAM, PA. 19044	CONTRACT NO.	CAGE CODE 20747	PL460-2142-501	REV B

LIST TITLE LLF001-1	SUBCONTRACT NO.		SHEET NO. 4

FIND NO	QTY REQ	UM	CAGE CODE	DOCUMENT NUMBER	PART OR IDENTIFYING NUMBER	NOMENCLATURE OR DESCRIPTION	NOTES
075	1	EA	51640	139-652-001	AD539JD	IC LOG LIN MULT 16 PIN	U6
076	1	EA	17856	139-1243-143	DG5143CJ	ANALOG SW 2-SPDT 16P	U8
077	1	EA	01295	139-198-404	SN74LS04N	HEX INVERTER 14P	U12
080	1	EA	27014	139-907-002	LM337H	VLT REG NEG ADJ TO39	VR1
081	1	EA	27014	139-600-002	LM317H	VLT REG POS ADJ TO39	VR2
085	1	EA	11769	108-203-041	7022-041-000001	CONN FING BLOC 41 POS	
089	10	EA	30035	121-202-005	SPCJ-200-05	TEST POINT PC GRN	TP1 TP2 TP3 TP4 TP5 TP6 TP7 TP8 TP9 TP10
090	1	EA	30035	121-202-009	SPCJ-200-01	TEST POINT PC WHT	TP11
091	2	EA	71279	118-005-003	1604-2-05	TERMINAL TURRET SLDR	TP12 TP13
093	2	EA	98159	131-200-002	2927-1-2	STRAP RUBBER 2 IN	
100	2	EA	07047	131-014-001	10030	PAD TRANS TO 5 3 PIN	
				AD 460-2142-501		ASSEMBLY DRAWING - LLF001-1	
				SD 600-0538		SCHEMATIC DIAGRAM - LLF001	
				AT 297-1244		ACCEPTANCE TEST PROCEDURE - LLF001	

REVISIONS				
ZONE	LTR	DESCRIPTION	DATE	APPROVED
	A	REVISED PER ECO #18459	10/20/89	R.CLAY
	B	REVISED PER ECO #23285	7/15/92	R.S. Volz

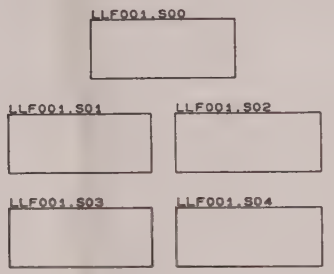

SHEET	46	47	48	49	50	51	52	53	54	55	56	57	58	59	60
REV.															
SHEET	31	32	33	34	35	36	37	38	39	40	41	42	43	44	45
REV.															
SHEET	16	17	18	19	20	21	22	23	24	25	26	27	28	29	30
REV.															
SHEET	1	2	3	4	5	6	7	8	9	10	11	12	13	14	15
REV.	B	B	B	B											

460-2142	1245-81
NEXT ASSY.	USED ON
APPLICATION	

DRAWN	R.C.	DATE
CHECKED	J.DOERR	12/9/88
DRAFTING	J.H.BARON	10/6/88
ENGINEER	T.NAPIER	02/28/89
APPROVED	R.S. VOLZ	1 MAR 89
MAGNETIC MEDIA		

AYDIN MONITOR SYSTEMS
FORT WASHINGTON, PA
19034

LLF001

SIZE	CODE IDENT	DOCUMENT NO.	REV.
B	20747	SD600-0538	B

SHEET NO. 00 OF 4

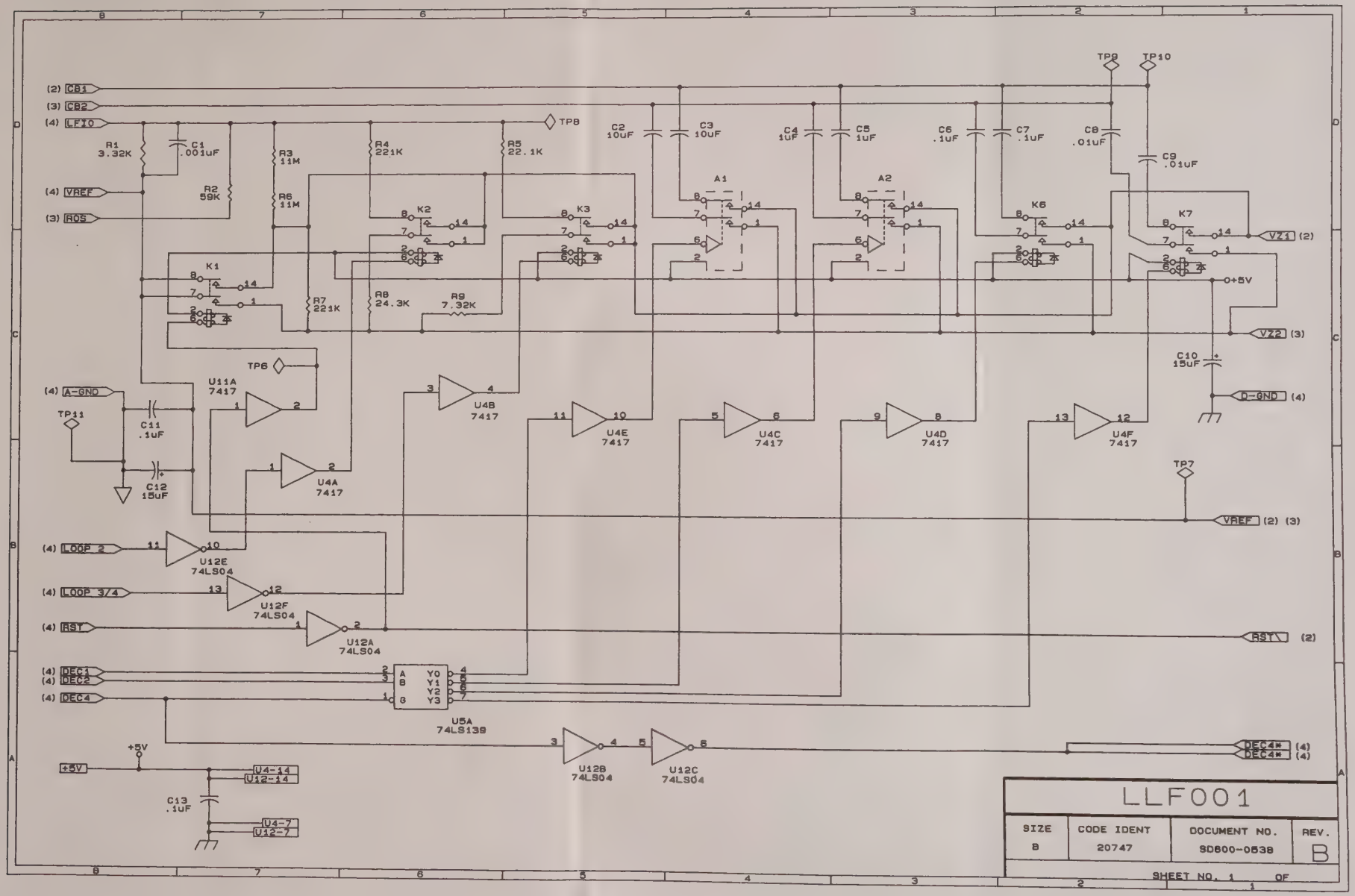

LLF001			
SIZE	CODE IDENT	DOCUMENT NO.	REV.
B	20747	SD800-0538	B
SHEET NO. 1 OF			

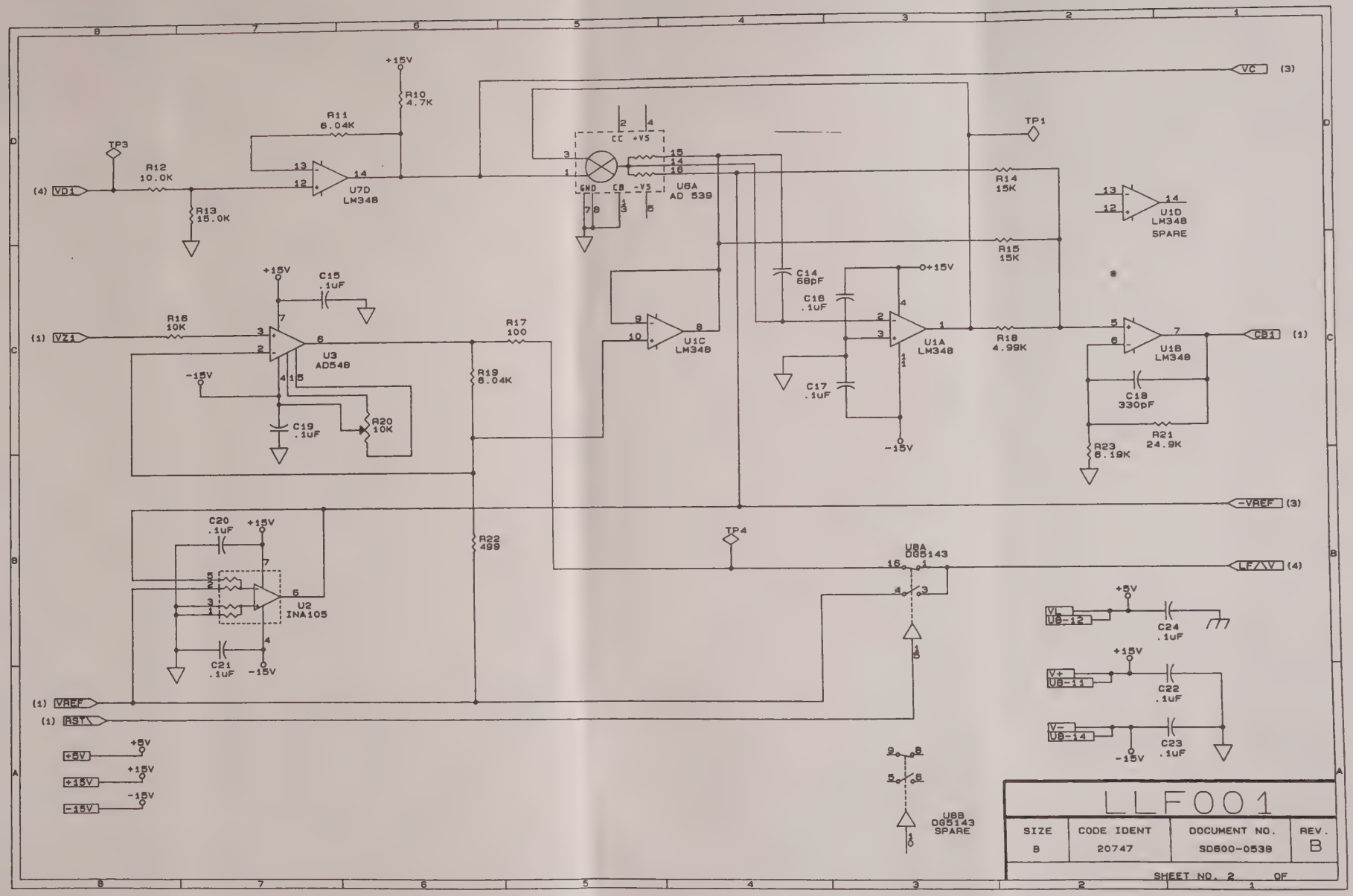
+15V
R10 4.7K
R11 6.04K
TP3
R12 10.0K
(4) VD1
R13 15.0K
U7D LM348
U6A AD 539
VC (3)
TP1
R14 15K
R15 15K
U1D LM348 SPARE
C15 .1uF
R16 10K
(1) VZ1
U3 AD548
-15V
C19 .1uF
R20 10K
R17 100
R19 6.04K
U1C LM348
C14 68pF
C16 .1uF
C17 .1uF
U1A LM348
R18 4.99K
U1B LM348
C18 330pF
R21 24.9K
R23 6.19K
CB1 (1)
-VREF (3)
C20 .1uF
U2 INA105
C21 .1uF
R22 499
TP4
U8A DG5143
LF/V (4)
+5V
VL U8-12
C24 .1uF
V+ U8-11
C22 .1uF
V- U8-14
C23 .1uF
(1) VREF
(1) RST
U8B DG5143 SPARE
LLF001
SIZE B
CODE IDENT 20747
DOCUMENT NO. SD600-0538
REV. B
SHEET NO. 2 OF

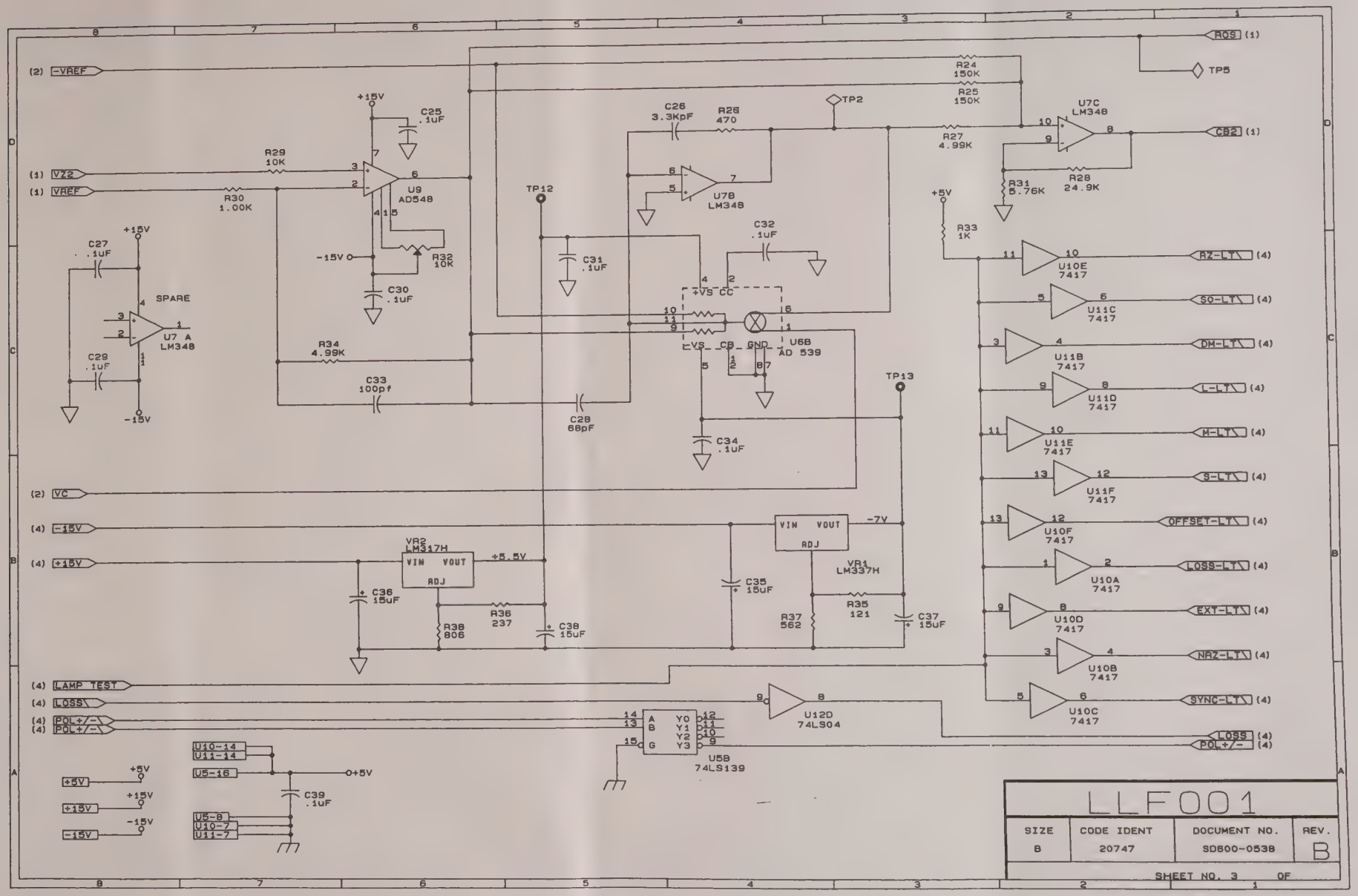
(2) -VREF
(1) VZ2
(1) VREF
R29 10K
R30 1.00K
U9 AD548
C25 .1uF
C30 .1uF
R32 10K
+15V
-15V
C27 .1uF
C29 .1uF
SPARE
U7 A LM348
R34 4.99K
C33 100pf
C28 68pF
TP12
C31 .1uF
C26 3.3KpF
R26 470
U7B LM348
C32 .1uF
+VS CC
-VS CB GND
U6B AD 539
TP2
R24 150K
R25 150K
R27 4.99K
U7C LM348
R31 5.76K
R28 24.9K
TP13
C34 .1uF
R33 1K
U10E 7417
U11C 7417
U11B 7417
U11D 7417
U11E 7417
U11F 7417
U10F 7417
U10A 7417
U10D 7417
U10B 7417
U10C 7417
RQS (1)
TP5
CB2 (1)
RZ-LT\ (4)
SO-LT\ (4)
DM-LT\ (4)
L-LT\ (4)
M-LT\ (4)
S-LT\ (4)
OFFSET-LT\ (4)
LOSS-LT\ (4)
EXT-LT\ (4)
NAZ-LT\ (4)
SYNC-LT\ (4)
(2) VC
(4) -15V
(4) +15V
VR2 LM317H
VIN VOUT ADJ
+5.5V
C36 15uF
R38 806
R36 237
C38 15uF
VR1 LM337H
-7V
C35 15uF
R35 121
R37 562
C37 15uF
(4) LAMP TEST
(4) LOSS\
(4) POL+/-
(4) POL+/-
U12D 74LS04
U5B 74LS139
LOSS (4)
POL+/- (4)
U10-14
U11-14
U5-16
+5V
C39 .1uF
U5-8
U10-7
U11-7
LLF001
SIZE B
CODE IDENT 20747
DOCUMENT NO. SD600-0538
REV. B
SHEET NO. 3 OF

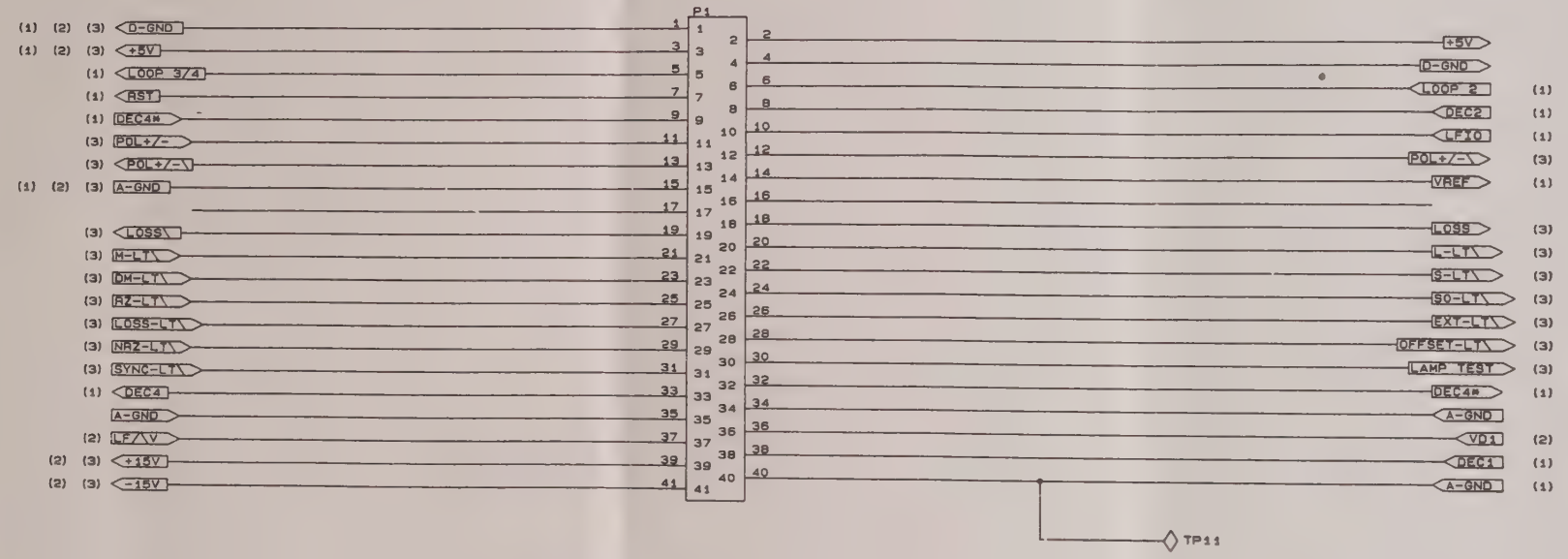

+5V @ 210MA.
+15V @ 35MA.
-15V @ 45MA.

LLF001			
SIZE B	CODE IDENT 20747	DOCUMENT NO. SD600-0538	REV. B
SHEET NO. 4 OF			

NOTICE TO PERSONS RECEIVING THIS DOCUMENT. THIS DOCUMENT IS THE EXCLUSIVE PROPERTY OF AYDIN CORPORATION. CONTAINS PROPRIETARY AND PRIVATE INFORMATION OF THE COMPANY AND IS DELIVERED ON THE EXPRESS CONDITION THAT IT IS NOT TO BE DISCLOSED OR REPRODUCED (IN WHOLE OR IN PART) NOR USED FOR MANUFACTURE BY ANYONE OTHER THAN THE AYDIN CORPORATION AND FURTHER NO RIGHT IS GRANTED TO DISCLOSE OR SO USE ANY INFORMATION CONTAINED IN THIS DOCUMENT

ZONE	LTR	REVISIONS DESCRIPTION	DATE	APPROVED
	A	REVISED PER [illegible] 17212	[illegible]	[illegible]
	B	REVISED PER ECO 17390	4/18/89	[illegible]
	C	REVISED PER ECO 17534	[illegible]	[illegible]
	D	REVISED PER ECO 17853	DW 7/14/89	[illegible]
	E	REVISED PER ECO 18253	A.A 9/22/89	[illegible]
	E1	REVISED PER ECO 21053	TW 28 JAN 89	[illegible]
	E2	REV PER ECO# 21183	J H 12 FEB 91	[illegible]

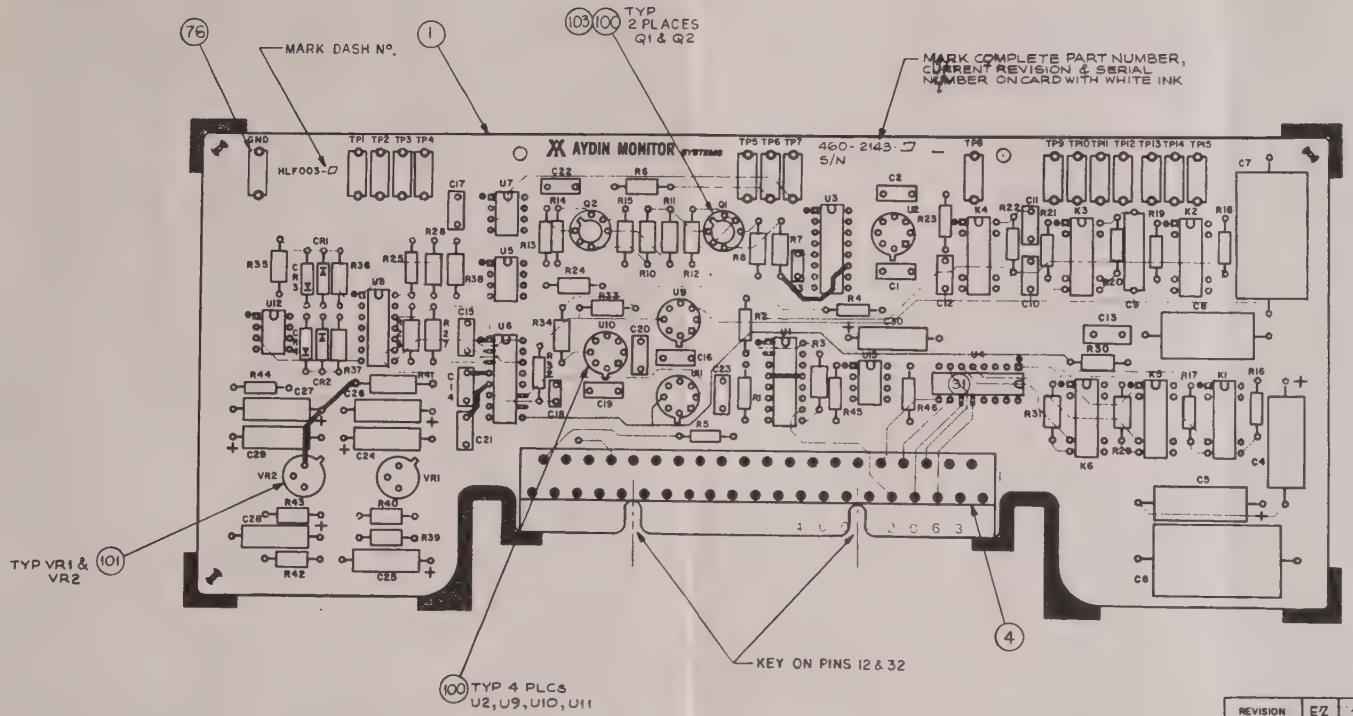

NOTES:

1. FOR GENERAL MANUFACTURING & ENGINEERING NOTES SEE DRAWING Nº A) 401-0010.
2. VERSION -502 DOES NOT USE CR1, CR2, CR3 & CR4

REVISION	E2	-
DASH NO.	-501	-502

FOR SCHEMATIC DIAG SEE SD600-0539
FOR PARTS LIST SEE PL 460-2143-□

DRAWN J. ALLISON	DATE 11 NOV 88
CHECKED J. DOERR	14 NOV 88
DRAFTING E. Stucker	
ENGINEER T. NAPIER	JAN 9, 1989
MFG. R. [illegible]	1/9/89
APPROVED T. M. Nahn	JAN 9 1989
APPROVED [illegible]	2 15 91

AYDIN MONITOR SYSTEMS
PORT WASHINGTON, PENNA. 19550

CARD ASSEMBLY
HLF003-□,

NEXT ASSY	USED ON
	1245-82
APPLICATION	

SIZE	CODE IDENT NO.		REV
D	20747	AD460-2143-□	E2
SCALE 2/1		SHEET 1 OF 1	

REVISIONS				
REV	DESCRIPTION	EFFECTIVE ON S/N	DATE	APPROVED
A	REVISED PER ECO 17212		1/13/89	L. Koch.
B	REVISED PER ECO 17534		5.22.89	[illegible]
C	REV PER ECO 17853 DM		7.14.89	L. Kocherspeger
D	REV PER ECO 18253 PM		9-22-89	[illegible]
D1	REV PER ECO 18672 KP		12/7/89	[illegible]
E	REV PER ECO 21053 KP		JAN [illegible]	[illegible]

SHEET	1	2	3	4	5	6	7	8	9	10	11	12	13	14	15	16	17	18	19	20	21	22	23
REVISION																							

AYDIN MONITOR SYSTEMS
FORT WASHINGTON, PENNA. 19034

TITLE PARTS LIST HLF003-1

CODE IDENT 20747
CONTRACT NO. 1245-82

DRAWN	J. DOERR	NOV 88	ENGINEER	T. NAPIER	NOV 1988	DWG NO. PL 460-2143-501	REV E
CHECKED	J. DOERR	JAN 89	APPROVED	T M Nah	JAN 9 89		
DRAFTING	[illegible]	JAN 9 1989	MFG	R. [illegible]	[illegible]	SHEET 1 OF 4	

800-0066

PARTS LIST	DESIGN ACTIVITY IDENTIFICATION AYDIN COMPUTER AND MONITOR DIVISION HORSHAM, PA. 19044	CONTRACT NO. 6058	CAGE CODE 20747	PL460-2143-501	REV E

LIST TITLE CARD ASSY HLF003-1	SUBCONTRACT NO.		SHEET NO. 2

FIND NO	QTY REQ	U/M	CAGE CODE	DOCUMENT NUMBER	PART OR IDENTIFYING NUMBER	NOMENCLATURE OR DESCRIPTION	NOTES
001	1	EA		400-2063	400-2063	PWB HLF003	
004	1	EA	91662	108-203-041	7022-041-000001	CONN FING BLOC 41 POS	
007	11	EA	71590	102-419-104	CK06BX104M	CAP .1UF 100V 20%	C1 C2 C14 C15 C16 C17 C19 C20 C21 C22 C23
008	1	EA	81349	102-411-101	CK05BX101K	CAP 100PF 200V 10%	C3
009	2	EA	56289	102-305-476	150D476X0020R2	CAP 47UF 20V 20%	C4 C5
011	2	EA	14752	102-092-1106	650C1A106J	PLYCARB 10UF 5% 50V	C6 C7
012	1	EA	84411	102-015-105	X663F1059.5W2	CAP 1UF 50V 10%	C8
013	1	EA	84411	102-016-334	X663FR3349.5W18	CAP .33UF 50V 10%	C9
014	2	EA	18796	102-418-333	RPE122X7R333K10	CAP .033UF 100V, 10%	C10 C11
016	1	EA	72982	102-417-332	CRC230C0G332J100	MONO 3.3K PF COG 5%	C12
017	1	EA	18796	102-417-103	RPE113C0G103J100V	MONO .01 UF COG 5%	C13
018	1	EA	18796	102-417-470	RPE110C0G470J100V	MONO 47PF COG 5% RAD	C18
019	5	EA	56289	102-305-156	150D156X0020B2	CAP 15UF 20V 20%	C24 C25 C26 C27 C28
021	2	EA	56289	102-304-396	150D396X9010B2	CAP 39UF 10V 10%	C29 C30
025	4	EA	03877	104-014-001	1N914	DIODE SILICON DO-7	CR1 CR2 CR3 CR4
030	6	EA	94696	106-058-022	W171DIP-25	RELAY REED DIP	K1 K2 K3 K4 K5 K6
031	1	EA		108-985-1316	CIC-316-SGT-02-S	SCKT DIP W/CAP 16PIN	
035	2	EA	54186	103-647-008	IT130	XSTR DUAL PNP TO-71	Q1 Q2
040	4	EA	91637	100-037-470	CCF-07-470-J	MTFLM 47 OHM .25W 5%	R1 R2 R13 R14
041	1	EA	81349	100-215-2211	100-215-2211	USE (100-255-2211)	R3
042	2	EA	91637	100-037-472	CCF-07-472-J	MTFLM 4.7K .25W 5%	R4 R25
043	1	EA	91637	100-037-100	CCF-07-100-J	MTFLM 10 OHM .25W 5%	R5

PARTS LIST	DESIGN ACTIVITY IDENTIFICATION AYDIN COMPUTER AND MONITOR DIVISION HORSHAM, PA. 19044	CONTRACT NO. 6058	CAGE CODE 20747	PL460-2143-501	REV E

LIST TITLE CARD ASSY HLF003-1	SUBCONTRACT NO.		SHEET NO. 3

FIND NO	QTY REQ	U/M	CAGE CODE	DOCUMENT NUMBER	PART OR IDENTIFYING NUMBER	NOMENCLATURE OR DESCRIPTION	NOTES
044	2	EA	81349	100-215-1000	100-215-1000	USE (100-255-1000)	R6 R15
046	2	EA	81349	100-215-2490	100-215-2490	REPLACE W/ 100-255-2490	R7 R8
048	3	EA	81349	100-215-1001	100-215-1001	USE 100-255-1001	R10 R11 R32
049	1	EA	20747	100-215-6811	100-215-6811	REPLACE W/100-255-6811	R12
051	8	EA	91637	100-037-105	CCF-07-105-J	MTFLM 1MEG .25W 5%	R16 R17 R18 R19 R20 R21 R22 R23
052	2	EA	20747	100-215-1502	100-215-1502	REPLACE W/100-255-1502	R24 R28
053	1	EA	20747	100-215-6041	100-215-6041	REPLACE W/100-255-6041	R26
054	1	EA	81349	100-215-1002	100-215-1002	USE 100-255-1002	R27
056	1	EA	20747	100-215-7870	100-215-7870	REPLACE W/100-255-7870	R29
057	1	EA	81349	100-215-1911	100-215-1911	USE 100-255-1911	R30
058	1	EA	20747	100-215-52R3	100-215-52R3	RES 52.3 OHMS 1/8W 1%	R31
059	2	EA	20747	100-215-4991	100-215-4991	USE 100-255-4991	R33 R34
061	1	EA	20747	100-215-1242	100-215-1242	REPLACE W/100-255-1242	R35
062	2	EA	20747	100-215-2212	100-215-2212	REPLACE W/100-255-2212	R36 R38
063	1	EA	20747	100-215-8251	100-215-8251	REPLACE W/100-255-8251	R37
064	1	EA	20747	100-215-1210	100-215-1210	REPLACE W/100-255-1210	R39
066	1	EA	81349	100-215-5620	100-215-5620	MTFLM 562 OHM.125W 1%	R40
067	1	EA	81349	100-005-131	RC20GF131J	RES 130 OHMS 1/2W 5%	R41
068	1	EA	20747	100-215-2320	100-215-2320	REPLACE W/100-255-2320	R42
069	1	EA	20747	100-215-68R1	100-215-68R1	REPLACE W/100-255-68R1	R43
071	3	EA	75042	100-037-102	RG1/4-1K-5%	MTFLM 1K .25W 5%	R44 R45 R46

PARTS LIST	DESIGN ACTIVITY IDENTIFICATION AYDIN COMPUTER AND MONITOR DIVISION HORSHAM, PA. 19044	CONTRACT NO. 6058	CAGE CODE 20747	PL460-2143-501	REV E

LIST TITLE CARD ASSY HLF003-1	SUBCONTRACT NO.		SHEET NO. 4

FIND NO	QTY REQ	U/M	CAGE CODE	DOCUMENT NUMBER	PART OR IDENTIFYING NUMBER	NOMENCLATURE OR DESCRIPTION	NOTES
075	15	EA	30035	121-202-005	SPCJ-200-05	TEST POINT PC GRN	TP1 TP2 TP3 TP4 TP5 TP6 TP7 TP8 TP9 TP10 TP11 TP12 TP13 TP14 TP15
076	1	EA	30035	121-202-009	SPCJ-200-01	TEST POINT PC WHT	
080	2	EA	17856	139-1243-143	DG5143CJ	ANALOG SW 2-SPDT 16P	U1 U3
081	2	EA	12040	139-144-001	LM310H	IC OP AMP 8 PIN TO-5	U2 U9
082	1	EA	20747	291-0451-501	291-0451-501	PROM HLF003 RNG DECOD	U4
083	3	EA	13919	139-1260-105	INA105KP	DIFF AMP UNITY GN 8P	U5 U7 U12
084	1	EA	51640	139-652-001	AD539JD	IC LOG LIN MULT 16 PIN	U6
085	1	EA	34335	139-548-002	LM348N	IC OP AMP 14 PIN	U8
086	2	EA	12040	139-679-001	LF356H	OP AMP J FET TO-5	U10 U11
087	1	EA	01295	139-085-451	SN75451BP	IC PERI DRIVER 8 PIN	U13
090	1	EA	27014	139-907-002	LM337H	VLT REG NEG ADJ TO39	VR1
091	1	EA	16114	139-600-002	LM317H	VLT REG POS ADJ TO39	VR2
100	6	EA	07047	131-017-001	10383 DAP	PAD IC TO5 8PIN	
101	2	EA	07047	131-014-001	10030	PAD TRANS TO 5 3 PIN	
103	2	EA	19080	131-049-001	RC-TO18100-2A	PAD TRANS TO18 6PIN	
				AD 460-2143-501		ASSEMBLY DRAWING - HLF003-1	
				SD 600-0539		SCHEMATIC DIAGRAM - HLF003	
				AT 297-1243		ACCEPTANCE TEST PROCEDURE - HLF003 ATP	

REVISIONS				
ZONE	LTR	DESCRIPTION	DATE	APPROVED
	[-]	RELEASED	1/ 9/89	T.NAPIER
	A	REV PER ECO 21053	1/28/91	T.BORAWSKI
	B	REV PER ECO 22580	12/5/91	

HLF003.S00

HLF003.S01

HLF003.S02

HLF003.S03

HLF003.S04

SHEET	46	47	48	49	50	51	52	53	54	55	56	57	58	59	60
REV															
SHEET	31	32	33	34	35	36	37	38	39	4.	41	42	43	44	45
REV															
SHEET	16	17	18	19	20	21	22	23	24	25	26	27	28	29	30
REV															
SHEET	1	2	3	4	5	6	7	8	9	1^	11	.2	13	14	15
REV.	[-]	[-]	B	[-]											

460-2143	1245-82
NEXT ASSY.	USED ON
APPLICATION	

DRAWN R. C.	DATE 8/11/88
CHECKED J. DOERR	9 JAN 89
DRAFTING J.H.BARON	11/11/88
ENGINEER T.NAPIER	9 JAN 89
APPROVED T.NAPIER	9 JAN 89
MAGNETIC MEDIA	

AYDIN MONITOR SYSTEMS
FORT WASHINGTON, PA
19034

HLF003

SIZE	CODE IDENT	DOCUMENT NO.	REV.
B	20747	SD 600-0539	B

SHEET NO. 00 OF

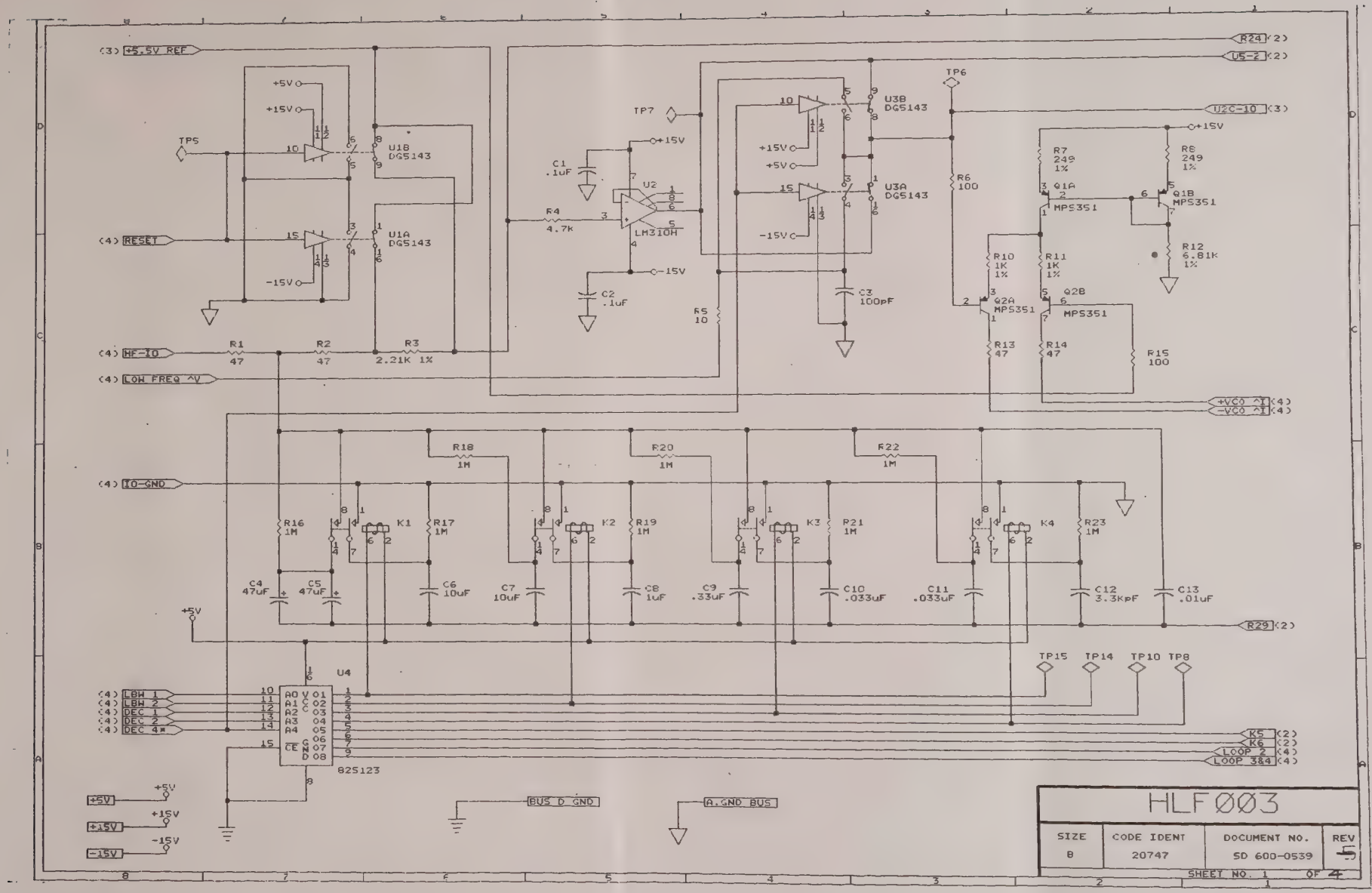

HLF ØØ3			
SIZE	CODE IDENT	DOCUMENT NO.	REV
B	20747	SD 600-0539	5

SHEET NO. 1 OF 4

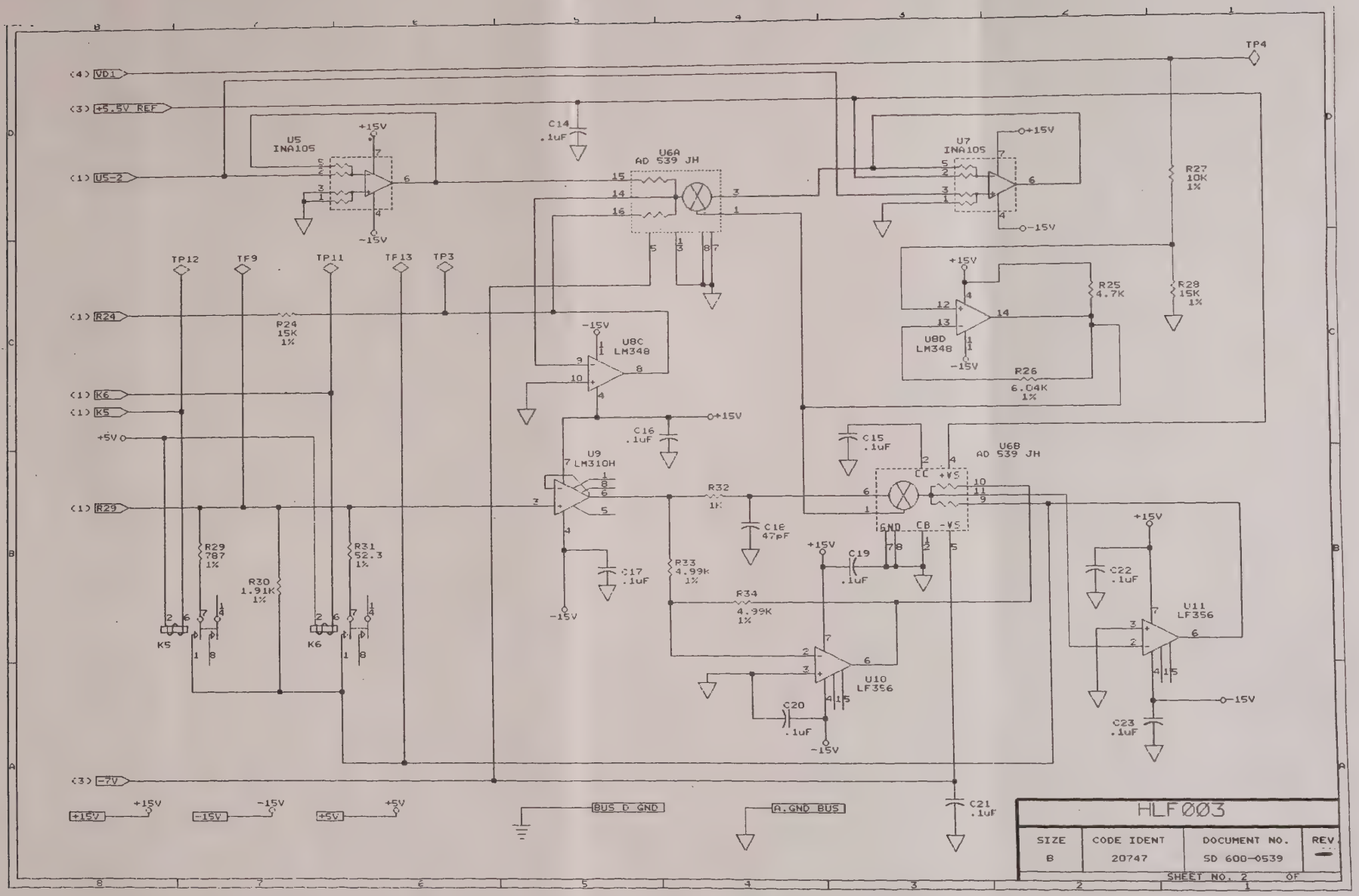
TP4
(4) VD1
(3) +5.5V REF
(1) U5-2
U5 INA105
+15V
-15V
C14 .1uF
U6A AD 539 JH
U7 INA105
R27 10K 1%
R28 15K 1%
R25 4.7K
R26 6.04K 1%
U8D LM348
TP12
TP9
TP11
TP13
TP3
(1) R24
P24 15K 1%
U8C LM348
(1) K6
(1) K5
+5V
C16 .1uF
U9 LM310H
C15 .1uF
U6B AD 539 JH
(1) R29
R32 1K
C18 47pF
R29 787 1%
R30 1.91K 1%
R31 52.3 1%
K5
K6
C17 .1uF
R33 4.99K 1%
R34 4.99K 1%
C19 .1uF
U10 LF356
C20 .1uF
U11 LF356
C22 .1uF
C23 .1uF
(3) -7V
+15V
-15V
+5V
BUS D GND
A.GND BUS
C21 .1uF
HLF003
SIZE B
CODE IDENT 20747
DOCUMENT NO. SD 600-0539
REV
SHEET NO. 2 OF 1

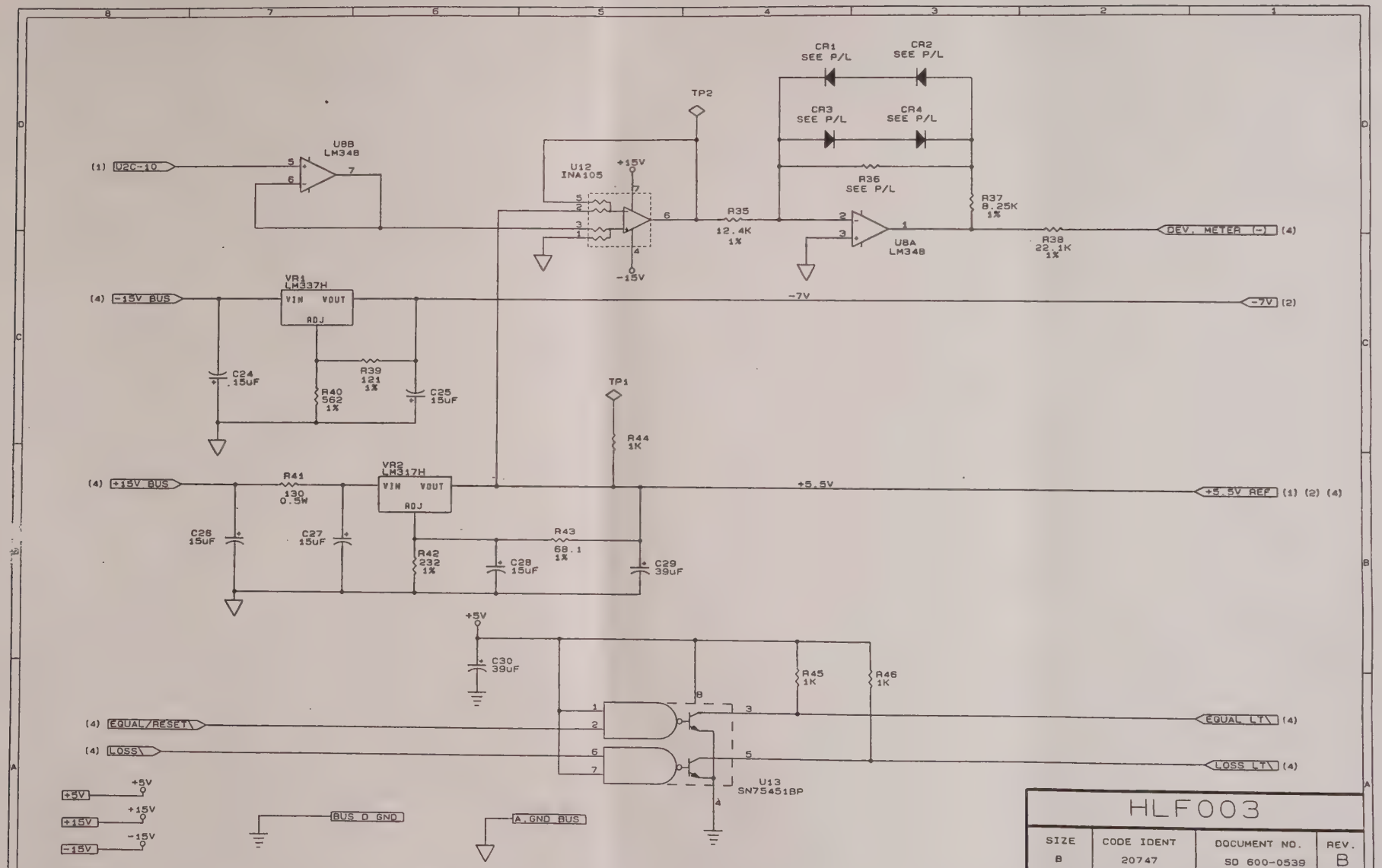

HLF003			
SIZE	CODE IDENT	DOCUMENT NO.	REV.
B	20747	SD 600-0539	B

SHEET NO. 3 OF

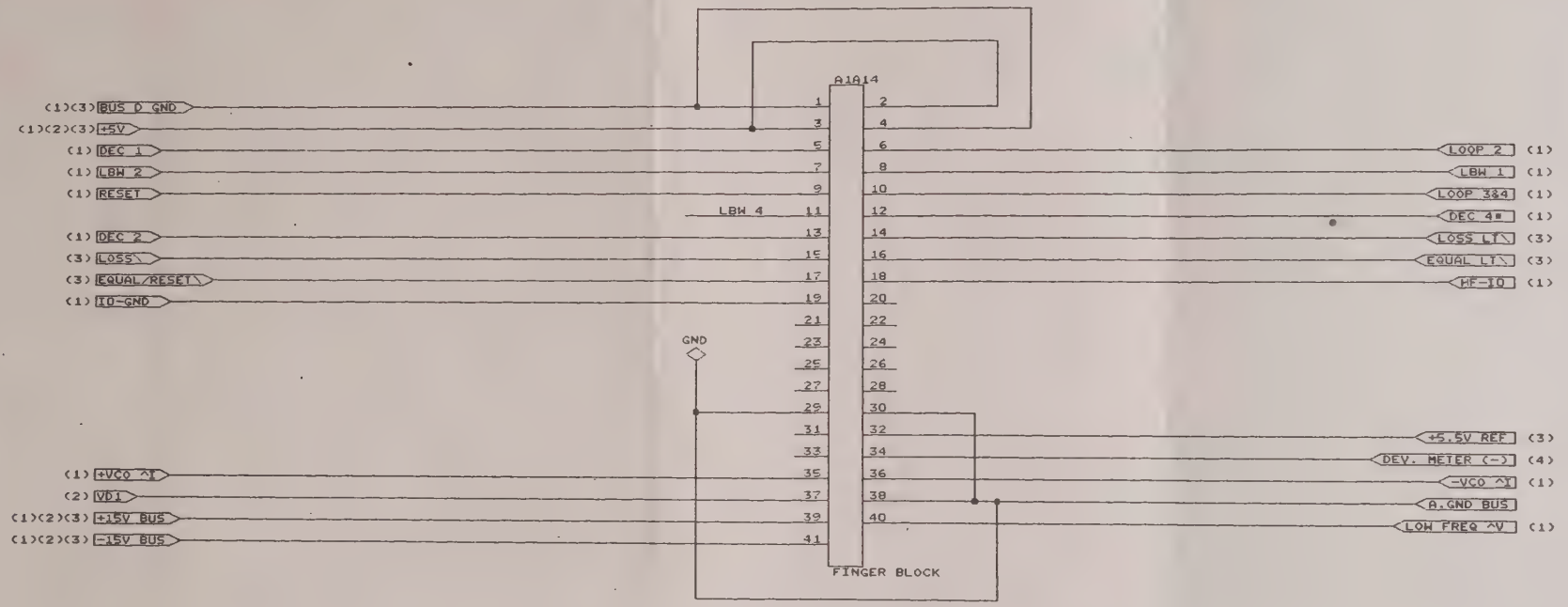

HLF ØØ3			
SIZE B	CODE IDENT 20747	DOCUMENT NO. 5D 600-0539	REV. 5
SHEET NO. 4 OF			

REVISIONS

REV	DESCRIPTION	EFFECTIVE ON S/N	DATE	APPROVED
B	REVISED PER ECO 07978 BAKER 18 OCT 82		10-25-82	J. Bradford
B1	REDRAWN WITHOUT CHANGE		12-30-83	ES
B2	ADDED PROM IMAGE PAGE		1-3-84	ES
	ADDED -510 J.S. 5-29-84		29 MAY 84	RSVolz
	ADDED -511 J.S. 7-5-84		7/5/84	J. McDaniels
	ADDED -512		24 Sept 84	RSVolz
	ADDED -513 SLH 7-24-85		7-24-85	R. VOLZ
—	REVISED PER ECO'S 12263 THRU 12274		12-13-85	[illegible]
—	ADDED -514 & -515 P.HO 2.25-86		26 Feb 86	RSVolz
—	REVISED PER ECO 13021 (-514)		13 MAY 86	[illegible]
—	REVISED PER ECO'S 14388, 14389		24 FEB 87	[illegible]
—	REVISED PER ECO's 14630, 14632, 14631, 14633 & 14646		4-16-87	L. Post
—	REVISED PER ECO 16050 & 16051		2/19/88	[illegible]
	REV PER ECO 20812 A.A.		12-12-90	L. Kocherysiyu
	REV PER ECO 21922 & 21923 [illegible]		7/11/91	D. Duckett
	-506 REV PER ECO 23114		4/27/92	R BROWN
	-505; -507 REV PER ECO 23145		5/27/92	R BROWN
	-517 REV PER ECO 23354		8/17/92	D. Duckett
	REV PER ECO 23355 (-521 & -522)		8/17/92	D. Duckett

PARTS LIST	50_1	50_2	50_3	50_4	50_5	50_6	50_7	50_8	50_9	51_0	51_1	51_2	51_3	51_4	51_5	51_6	51_7	51_8	51_9	52_0	52_1	52_2
REVISION	E	E	E	E	E	E	D	F	D	D	D	E	C	D	C	B	C1	B	A	A	-	-
ASSY	50_1	50_2	50_3	50_4	50_5	50_6	50_7	50_8	50_9	51_0	51_1	51_2	51_3	51_4	51_5	51_6	51_7	51_8	51_9	52_0	52_1	52_2
REVISION	E1	E	E	E	E	E	D	F	D	D	D	E	C	D	C	B	C	B	A	A	-	-

AYDIN COMPUTER AND MONITOR Division
700 DRESHER ROAD HORSHAM, PA 19044

TITLE TOP ASSY INF-IEEE

CODE IDENT 20747

CONTRACT NO. 2043

DRAWN	Gur	1/5/82	ENGINEER	J. Fran	1/19/82	DWG NO. PL470-0051-☐	REV
CHECKED	RRK	16 Jan 82	APPROVED	J. McD	1/19/82		
DRAFTING	E. Stucher	1-19-82	MSG	[illegible]	1/19/82	SHEET 1 OF 24	

800-0066

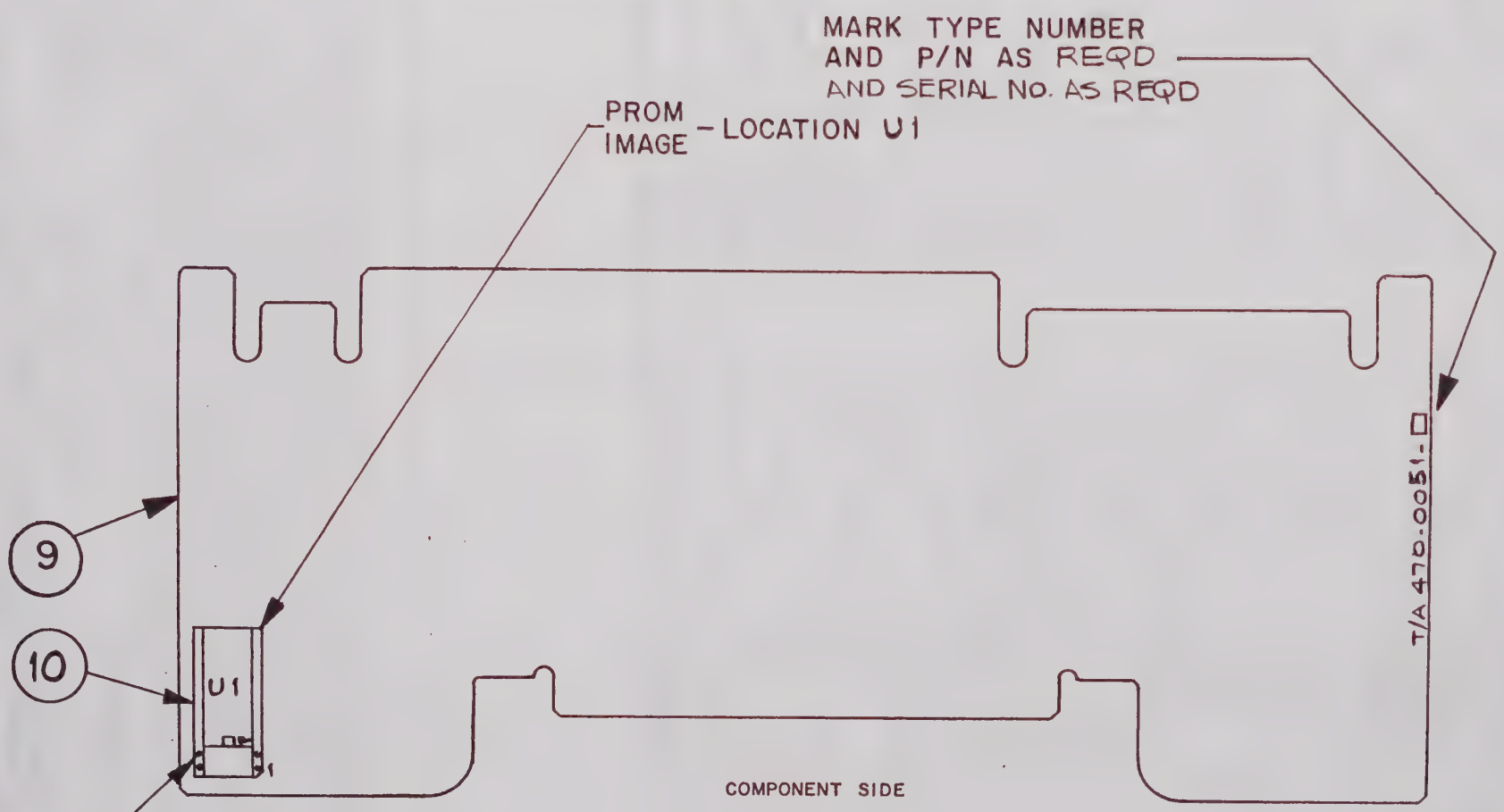

THESE 4 PINS, U1-1,-2,-27,-28, ARE NOT USED.
PIN 1 OF PROM TO BE INSERTED IN SOCKET U1 PIN 3.
(INFØ56 ONLY)

NOTES

1. FOR GENERAL MANUFACTURING AND ENGINEERING NOTES SEE DWG. NO. A)401-0010.
2. ALL CHARACTERS SHALL BE 1/8" HIGH AND APPLIED PER MONITOR SPEC. 296-0191.

CODE IDENT NO.	DWG NO.	REV
20747	PL470-0051-□	
	SHEET 2 OF 24	

PARTS LIST	DESIGN ACTIVITY IDENTIFICATION AYDIN COMPUTER AND MONITOR DIVISION HORSHAM, PA. 19044	CONTRACT NO.	CAGE CODE 20747	PL470-0051-501	REV E

LIST TITLE	SUBCONTRACT NO.	SHEET NO.
INF-IEEE 321A/RCA		

FIND NO	QTY REQ	U/M	CAGE CODE	DOCUMENT NUMBER	PART OR IDENTIFYING NUMBER	NOMENCLATURE OR DESCRIPTION	NOTES
009	1	EA	20747	460-2269-501	460-2269-501	INF056-1 CARD ASSY	
010	1	EA	20747	291-0120-501	291-0120-501	IEEE INTERFACE	

PARTS LIST	DESIGN ACTIVITY IDENTIFICATION AYDIN COMPUTER AND MONITOR DIVISION HORSHAM, PA. 19044	CONTRACT NO.	CAGE CODE 20747	PL470-0051-502	REV E

LIST TITLE	SUBCONTRACT NO.	SHEET NO.
INF-IEEE-335		4

FIND NO	QTY REQ	U/M	CAGE CODE	DOCUMENT NUMBER	PART OR IDENTIFYING NUMBER	NOMENCLATURE OR DESCRIPTION	NOTES
009	1	EA	20747	460-2269-501	460-2269-501	INF056-1 CARD ASSY	
010	1	EA	20747	291-0127-501	291-0127-501	IEEE-488 INTERFACE	

DESIGN ACTIVITY IDENTIFICATION	CONTRACT NO.	CAGE CODE		REV
AYDIN COMPUTER AND MONITOR DIVISION HORSHAM, PA. 19044		20747	PL470-0051-503	E

LIST TITLE	SUBCONTRACT NO.		SHEET NO.
INF-IEEE-362			5

FIND NO	QTY REQ	U/M	CAGE CODE	DOCUMENT NUMBER	PART OR IDENTIFYING NUMBER	NOMENCLATURE OR DESCRIPTION	NOTES
009	1	EA	20747	460-2269-501	460-2269-501	INF056-1 CARD ASSY	
010	1	EA	20747	291-0128-501	291-0128-501	IEEE INTERFACE	

PARTS LIST	DESIGN ACTIVITY IDENTIFICATION AYDIN COMPUTER AND MONITOR DIVISION HORSHAM, PA. 19044	CONTRACT NO.	CAGE CODE 20747	PL470-0051-504	REV E

LIST TITLE	SUBCONTRACT NO.	SHEET NO.
INF-IEEE-523-1		6

FIND NO	QTY REQ	U/M	CAGE CODE	DOCUMENT NUMBER	PART OR IDENTIFYING NUMBER	NOMENCLATURE OR DESCRIPTION	NOTES
009	1	EA	20747	460-2269-501	460-2269-501	INF056-1 CARD ASSY	
010	1	EA	20747	291-0129-501	291-0129-501	IEEE INTERFACE	

PARTS LIST	DESIGN ACTIVITY IDENTIFICATION AYDIN COMPUTER AND MONITOR DIVISION HORSHAM, PA. 19044	CONTRACT NO.	CAGE CODE 20747	PL470-0051-505	REV E

LIST TITLE	SUBCONTRACT NO.	SHEET NO.
INF-IEEE-321A		7

FIND NO	QTY REQ	UM	CAGE CODE	DOCUMENT NUMBER	PART OR IDENTIFYING NUMBER	NOMENCLATURE OR DESCRIPTION	NOTES
009	1	EA	20747	460-2269-501	460-2269-501	INF056-1 CARD ASSY	
010	1	EA	20747	291-0120-501	291-0120-501	IEEE INTERFACE	
				AT 297-1083		ACCEPTANCE TEST PROCEDURE - INF045-1,2	

PARTS LIST	DESIGN ACTIVITY IDENTIFICATION: AYDIN COMPUTER AND MONITOR DIVISION, HORSHAM, PA. 19044	CONTRACT NO.	CAGE CODE: 20747	PL470-0051-506	REV: E

LIST TITLE: INF-IEEE-329A	SUBCONTRACT NO.		SHEET NO.: 8

FIND NO	QTY REQ	UM	CAGE CODE	DOCUMENT NUMBER	PART OR IDENTIFYING NUMBER	NOMENCLATURE OR DESCRIPTION	NOTES
009	1	EA	20747	460-2269-501	460-2269-501	INF056-1 CARD ASSY	
010	1	EA	20747	291-0151-501	291-0151-501	IEEE INTERFACE	
				AT 297-1083		ACCEPTANCE TEST PROCEDURE - INF045-1,2	

PARTS LIST	DESIGN ACTIVITY IDENTIFICATION	CONTRACT NO.	CAGE CODE		REV
	AYDIN COMPUTER AND MONITOR DIVISION		20747	PL470-0051-507	D
	HORSHAM, PA. 19044				

LIST TITLE	SUBCONTRACT NO.		SHEET NO.
INF-IEEE-321B			4

FIND NO	QTY REQ	UM	CAGE CODE	DOCUMENT NUMBER	PART OR IDENTIFYING NUMBER	NOMENCLATURE OR DESCRIPTION	NOTES
009	1	EA	20747	460-2269-501	460-2269-501	INF056-1 CARD ASSY	
010	1	EA	20747	291-0152-501	291-0152-501	IEEE INTERFACE	

PARTS LIST	DESIGN ACTIVITY IDENTIFICATION AYDIN COMPUTER AND MONITOR DIVISION HORSHAM, PA. 19044	CONTRACT NO.	CAGE CODE 20747	PL470-0051-508	REV F

LIST TITLE	SUBCONTRACT NO.		SHEET NO.
INF-IEEE-322			10

FIND NO	QTY REQ	U/M	CAGE CODE	DOCUMENT NUMBER	PART OR IDENTIFYING NUMBER	NOMENCLATURE OR DESCRIPTION	NOTES
009	1	EA	20747	460-2269-501	460-2269-501	INF056-1 CARD ASSY	
010	1	EA	20747	291-0156-501	291-0156-501	IEEE INTERFACE	
				AT 297-1083		ACCEPTANCE TEST PROCEDURE - INF045-1,2	

PARTS LIST	DESIGN ACTIVITY IDENTIFICATION AYDIN COMPUTER AND MONITOR DIVISION HORSHAM, PA. 19044	CONTRACT NO.	CAGE CODE 20747	PL470-0051-509	REV D
LIST TITLE INF-IEEE-490		SUBCONTRACT NO.			SHEET NO.

FIND NO	QTY REQ	U/M	CAGE CODE	DOCUMENT NUMBER	PART OR IDENTIFYING NUMBER	NOMENCLATURE OR DESCRIPTION	NOTES
009	1	EA	20747	460-2269-501	460-2269-501	INF056-1 CARD ASSY	
010	1	EA	20747	291-0185-501	291-0185-501	MOD 490	

PARTS LIST	DESIGN ACTIVITY IDENTIFICATION AYDIN COMPUTER AND MONITOR DIVISION HORSHAM, PA. 19044	CONTRACT NO.	CAGE CODE 20747	PL470-0051-510	REV D

LIST TITLE	SUBCONTRACT NO.		SHEET NO.
INF-IEEE-335/5			

FIND NO	QTY REQ	U/M	CAGE CODE	DOCUMENT NUMBER	PART OR IDENTIFYING NUMBER	NOMENCLATURE OR DESCRIPTION	NOTES
009	1	EA	20747	460-2269-501	460-2269-501	INF056-1 CARD ASSY	
010	1	EA	20747	291-0194-501	291-0194-501	IEEE INTERFACE	

PARTS LIST	DESIGN ACTIVITY IDENTIFICATION AYDIN COMPUTER AND MONITOR DIVISION HORSHAM, PA. 19044	CONTRACT NO.	CAGE CODE 20747	PL470-0051-511	REV D
LIST TITLE INF-IEEE-523-2		SUBCONTRACT NO.			SHEET NO. 13

FIND NO	QTY REQ	U/M	CAGE CODE	DOCUMENT NUMBER	PART OR IDENTIFYING NUMBER	NOMENCLATURE OR DESCRIPTION	NOTES
009	1	EA	20747	460-2269-501	460-2269-501	INF056-1 CARD ASSY	
010	1	EA	20747	291-0195-501	291-0195-501	IEEE INTERFACE	

PARTS LIST	DESIGN ACTIVITY IDENTIFICATION AYDIN COMPUTER AND MONITOR DIVISION HORSHAM, PA. 19044	CONTRACT NO.	CAGE CODE 20747	PL470-0051-512	REV E
LIST TITLE INF-IEEE-322A		SUBCONTRACT NO.			SHEET NO.

FIND NO	QTY REQ	U/M	CAGE CODE	DOCUMENT NUMBER	PART OR IDENTIFYING NUMBER	NOMENCLATURE OR DESCRIPTION	NOTES
009	1	EA	20747	460-2269-501	460-2269-501	INF056-1 CARD ASSY	
010	1	EA	20747	291-0217-501	291-0217-501	IEEE INTERFACE	
				AT 297-1083		ACCEPTANCE TEST PROCEDURE - INF045-1,2	

PARTS LIST	DESIGN ACTIVITY IDENTIFICATION AYDIN COMPUTER AND MONITOR DIVISION HORSHAM, PA. 19044	CONTRACT NO.	CAGE CODE 20747	PL470-0051-513	REV C

LIST TITLE	SUBCONTRACT NO.		SHEET NO.
INF-IEEE-362/T1			

FIND NO	QTY REQ	U/M	CAGE CODE	DOCUMENT NUMBER	PART OR IDENTIFYING NUMBER	NOMENCLATURE OR DESCRIPTION	NOTES
009	1	EA	20747	460-2269-501	460-2269-501	INF056-1 CARD ASSY	
010	1	EA	20747	291-0330-501	291-0330-501	IEEE-488 INTERFACE	

PARTS LIST	DESIGN ACTIVITY IDENTIFICATION AYDIN COMPUTER AND MONITOR DIVISION HORSHAM, PA. 19044	CONTRACT NO.	CAGE CODE 20747	PL470-0051-514	REV D
LIST TITLE INF-IEEE-800A		SUBCONTRACT NO.			SHEET NO. /c

FIND NO	QTY REQ	U/M	CAGE CODE	DOCUMENT NUMBER	PART OR IDENTIFYING NUMBER	NOMENCLATURE OR DESCRIPTION	NOTES
009	1	EA	20747	460-2269-501	460-2269-501	INF056-1 CARD ASSY	
010	1	EA	20747	291-0341-501	291-0341-501	800A-IEEE-408 INTRFC	

PARTS	DESIGN ACTIVITY IDENTIFICATION	CONTRACT NO.	CAGE CODE		REV
	AYDIN COMPUTER AND MONITOR DIVISION HORSHAM, PA. 19044		20747	PL470-0051-515	C

LIST TITLE	SUBCONTRACT NO.	SHEET NO.
INF-IEEE-322A-903		1

FIND NO	QTY REQ	U/M	CAGE CODE	DOCUMENT NUMBER	PART OR IDENTIFYING NUMBER	NOMENCLATURE OR DESCRIPTION	NOTES
009	1	EA	20747	460-2269-501	460-2269-501	INF056-1 CARD ASSY	
010	1	EA	20747	291-0336-501	291-0336-501	322A 903 PROM	

PARTS LIST	DESIGN ACTIVITY IDENTIFICATION AYDIN COMPUTER AND MONITOR DIVISION HORSHAM, PA. 19044	CONTRACT NO.	CAGE CODE 20747	PL470-0051-516	REV B

LIST TITLE	SUBCONTRACT NO.	SHEET NO.
INF-IEEE-800A-904		6

FIND NO	QTY REQ	U/M	CAGE CODE	DOCUMENT NUMBER	PART OR IDENTIFYING NUMBER	NOMENCLATURE OR DESCRIPTION	NOTES
001	1	EA	20747	460-2269-501	460-2269-501	INF056-1 CARD ASSY	
002	1	EA	20747	291-0382-501	291-0382-501	IEEE INTERFACE	

PARTS LIST	DESIGN ACTIVITY IDENTIFICATION AYDIN COMPUTER AND MONITOR DIVISION HORSHAM, PA. 19044	CONTRACT NO.	CAGE CODE 20747	PL470-0051-517	REV C1

LIST TITLE	SUBCONTRACT NO.	SHEET NO.
INF-IEEE-335A		19

FIND NO	QTY REQ	UM	CAGE CODE	DOCUMENT NUMBER	PART OR IDENTIFYING NUMBER	NOMENCLATURE OR DESCRIPTION	NOTES
009	1	EA	20747	460-2269-501	460-2269-501	INF056-1 CARD ASSY	
010	1	EA	20747	291-0439-501	291-0439-501	IEEE-335A	

PARTS LIST	DESIGN ACTIVITY IDENTIFICATION AYDIN COMPUTER AND MONITOR DIVISION HORSHAM, PA. 19044	CONTRACT NO.	CAGE CODE 20747	PL470-0051-518	REV B
LIST TITLE INF-IEEE-362/T1-905		SUBCONTRACT NO.			SHEET NO.

FIND NO	QTY REQ	U/M	CAGE CODE	DOCUMENT NUMBER	PART OR IDENTIFYING NUMBER	NOMENCLATURE OR DESCRIPTION	NOTES
001	1	EA	20747	460-2269-501	460-2269-501	INF056-1 CARD ASSY	
002	1	EA	20747	291-0438-501	291-0438-501	IEEE-362/T1-905	

DESIGN ACTIVITY IDENTIFICATION	CONTRACT NO.	CAGE CODE		REV
AYDIN COMPUTER AND MONITOR DIVISION HORSHAM, PA. 19044		20747	PL470-0051-519	A

LIST TITLE	SUBCONTRACT NO.		SHEET NO.
INF-IEEE-335A-915/926			

FIND NO	QTY REQ	U/M	CAGE CODE	DOCUMENT NUMBER	PART OR IDENTIFYING NUMBER	NOMENCLATURE OR DESCRIPTION	NOTES
009	1	EA	20747	460-2269-501	460-2269-501	INF056-1 CARD ASSY	
010	1	EA	20747	291-0515-501	291-0515-501	PROM 335A-42 IEEE	

PARTS LIST	DESIGN ACTIVITY IDENTIFICATION AYDIN COMPUTER AND MONITOR DIVISION HORSHAM, PA. 19044	CONTRACT NO.	CAGE CODE 20747	PL470-0051-520	REV A

LIST TITLE	SUBCONTRACT NO.	SHEET NO.
INF-IEEE-380-12		

FIND NO	QTY REQ	U/M	CAGE CODE	DOCUMENT NUMBER	PART OR IDENTIFYING NUMBER	NOMENCLATURE OR DESCRIPTION	NOTES
001	1	EA	20747	460-2269-501	460-2269-501	INF056-1 CARD ASSY	
005	1	EA	20747	291-0528-501	291-0528-501	PROM INF-IEEE 380-12	

LIST	DESIGN ACTIVITY IDENTIFICATION	CONTRACT NO.	CAGE CODE		REV
	INTERNAL USE ONLY		20747	PL470-0051-521	
CK	14:45:21 22 JUL 1992				—

LIST TITLE	SUBCONTRACT NO.		SHEET NO.
CARD ASSY IEEE-329A			23

FIND NO	QTY REQ	UM	CAGE CODE	DOCUMENT NUMBER	PART OR IDENTIFYING NUMBER	NOMENCLATURE OR DESCRIPTION	NOTES
009	1	EA	20747	460-2269-501	460-2269-501	INF056-1 CARD ASSY	
010	1	EA	20747	291-0573-501	291-0573-501	PROM IEEE 329A	U1
				AD 470-0051-521		ASSEMBLY DRAWING - CARD ASSY IEEE-329A	

LIST CHECK	DESIGN ACTIVITY IDENTIFICATION INTERNAL USE ONLY 14:45:57 22 JUL 1992	CONTRACT NO.	CAGE CODE 20747	PL470-0051-522	REV

LIST TITLE	SUBCONTRACT NO.	SHEET NO.
CARD ASSY IEEE-335A		24

FIND NO	QTY REQ	UM	CAGE CODE	DOCUMENT NUMBER	PART OR IDENTIFYING NUMBER	NOMENCLATURE OR DESCRIPTION	NOTES
009	1	EA	20747	460-2269-501	460-2269-501	INF056-1 CARD ASSY	
010	1	EA	20747	291-0572-501	291-0572-501	PROM IEEE 335A	U1
				AD 470-0051-522		ASSEMBLY DRAWING - CARD ASSY IEEE-335A	

NOTICE TO PERSONS RECEIVING THIS DOCUMENT. THIS DOCUMENT IS THE EXCLUSIVE PROPERTY OF AYDIN CORPORATION. CONTAINS PROPRIETARY AND PRIVATE INFORMATION OF THE COMPANY AND IS DELIVERED ON THE EXPRESS CONDITION THAT IT IS NOT TO BE DISCLOSED OR REPRODUCED (IN WHOLE OR IN PART) NOR USED FOR MANUFACTURE BY ANYONE OTHER THAN THE AYDIN CORPORATION AND FURTHER NO RIGHT IS GRANTED TO DISCLOSE OR SO USE ANY INFORMATION CONTAINED IN THIS DOCUMENT

REVISIONS

ZONE	LTR	DESCRIPTION	DATE	APPROVED
	[-]	RELEASED	12/13/90	R.S. VOLZ
	A	REVISED PER ECO 21141	2/13/91	E.FISHER
	B	REVISED PER ECO 21910	7/1/91	J.BOYTIM
		REVISED PER ECO 22002	10/31/91	J.BOYTIM
		REVISED PER ECO 22630	12/10/91	T. Wodeski

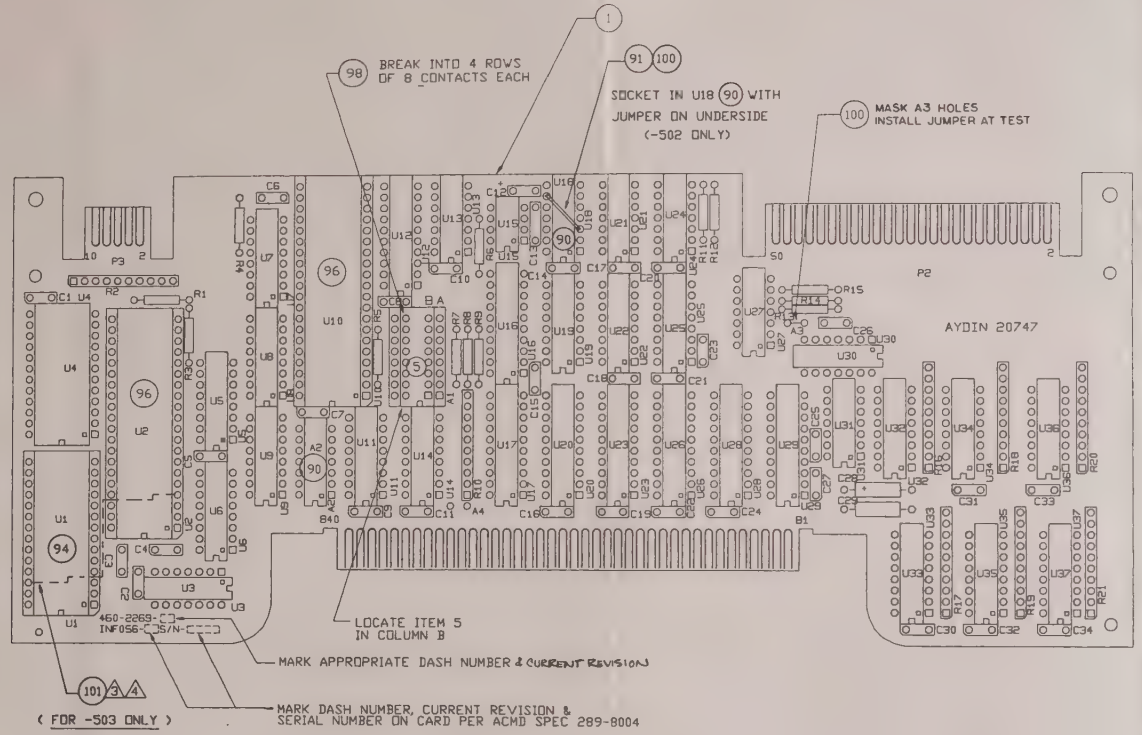

NOTES:

1. FOR GENERAL MANUFACTURING AND ENGINEERING NOTES SEE DWG. NO. A)285-8057.
2. THE MAXIMUM COMPONENT PROFILE IS .437.

3 ITEM 94 IS TO BE INSTALLED AFTER SOLDERING AND OPENING OF HOLE AT U1-26. (FOR -503 ONLY).

4 BEFORE INSTALLING ITEM 94 , AND AFTER WAVE SOLDERING , REMOVE PLATING IN HOLE U1-26 BY DRILLING OUT WITH A NUMBER 54 OR SMALLER BIT. AFTER INSTALLING ITEM 94 , INSTALL ITEM 101 FROM PIN U1-26 TO U2-4 ON SOLDER SIDE OF CARD ASSY. TACK GLUE AS REQUIRED. (FOR -503 ONLY).

U18-3 TO U18-9 USING ITEMS 91 & 100

-502 ONLY

REVISION	B2	[-]	[-]
DASH NO.	501	502	503

FOR PARTS LIST SEE PL 460-2269-

DRAWN W.T.WARD	DATE 14NOV90	AYDIN COMPUTER AND MONITOR DIVISION, 700 DRESHER ROAD • HORSHAM, PA • 19044
CHECKED W.T. WARD	12/3/90	
DRAFTING W.T. WARD	12/3/90	CARD ASSEMBLY INF056-
ENGINEER N. GREENIG	12/4/90	
MFG W. POLSKY	12/13/90	
APPROVED QA R. MILLER	12/13/90	SIZE D · CAGE CODE 20747 · AD460-2269- · REV
NEXT ASSY	USED ON 6012-9602	SCALE 2:1 · SHEET
APPLICATION		

REVISIONS			
REV	DESCRIPTION	DATE	APPROVED
—	RELEASED	12/13/90	[illegible]
A	REVISED PER ECO 20964	1/18/91	E. [illegible]
B	REVISED PER ECO 21141 [illegible]	2-13-91	E. [illegible]
C	REVISED PER ECO 21910 [illegible]	7-1-91	[illegible]

		CONTRACT NO.	AYDIN COMPUTER AND MONITOR Division 700 DRESHER ROAD HORSHAM, PA 19044
		DRAWN L. Wowk DATE 12/03/90	PARTS LIST CARD ASSEMBLY INF056
		CHECKED W.T. Ward 3DEC90	
		DRAFTING W.T. Ward 3DEC90	
		APPROVED ENG Nelson Greening 4DEC90	
	6012	APPROVED V. Polsky 12-13-90	SIZE A · CAGE CODE 20747 · DWG NO PL460-2269-501 · REV C
NEXT ASSY	USED ON	APPROVED [illegible] 12-13-90	
APPLICATION			SCALE NONE · SHEET 1 of 3

800-0015E

PARTS LIST	DESIGN ACTIVITY IDENTIFICATION AYDIN COMPUTER AND MONITOR DIVISION HORSHAM, PA. 19044	CONTRACT NO. 6012	CAGE CODE 20747	PL460-2269-501	REV C

LIST TITLE INF056-1 CARD ASSY	SUBCONTRACT NO.		SHEET NO. 2

FIND NO	QTY REQ	U/M	CAGE CODE	DOCUMENT NUMBER	PART OR IDENTIFYING NUMBER	NOMENCLATURE OR DESCRIPTION	NOTES
001	1	EA		400-2269-001	400-2269-001	PWB INF056	
005	1	EA	20747	300-0168-502	300-0168-502	COMP BRD	A1
006	1	EA	23875	133-027-074	MT0-T1-S3-8.0MHZ	XSTL OSC 8.0MHZ .1%	A2
010	30	EA	71590	102-419-104	CK06BX104M	CAP .1UF 100V 20%	C1-C11 C14-C27 C30-C34
012	1	EA	72982	102-419-105	RPE114Z5U105M100V	CAP 1UF 100V 20%	C12
014	1	EA	56289	102-467-011	923CZ5U104Z050B	CAP .1UF 50V 100-20%	C13
016	1	EA	56289	102-367-685	150D685X9035B2	CAP 6.8UF 35V 10%	C28
018	1	EA	14752	102-001-473	230B1B473	CAP .047UF 100V 20%	C29
020	7	EA	91637	100-037-682	CCF-07-682-J	MTFLM 6.8K .25W 5%	R1 R5 R7 R9 R13 R14 R15
022	8	EA	71450	100-106-006	750-101-R6.8K	RESNET 9BUSD 6.8K	R2 R10 R16 R17 R18 R19 R20 R21
024	3	EA	91637	100-037-331	CCF-07-331-J	MTFLM 330 OHM .25W 5%	R3 R8 R11
026	1	EA	91637	100-037-103	CCF-07-103-J	MTFLM 10K .25W 5%	R4
028	1	EA	91637	100-037-512	CCF-07-512-J	MTFLM 5.1K .25W 5%	R6
030	1	EA	75042	100-037-102	RG1/4-1K-5%	MTFLM 1K .25W 5%	R12
042	1	EA	56708	139-555-002	Z0840004PSC	IC PROCESSOR 40 PIN	U2
044	1	EA	01295	139-198-402	SN74LS02N	QUAD 2INPT POS NOR 14PIN	U3
046	1	EA		139-949-101	DS1220-150	NONVOLTL RAM 2KX8 24	U4
048	1	EA	01295	139-198-139	SN74LS139AN	2-4DEC/DEM 16P	U5
050	4	EA	04713	139-551-002	MC3448AP	IC TRANSCEIVER 16 PIN	U6 U7 U8 U9
052	1	EA	34649	139-552-003	D8291A	IC TALK/LISTEN 40 PIN	U10
054	4	EA	01295	139-198-257	SN74LS257BN	4DATA SEL/MUX NINV16P	U11 U14 U32 U33
056	1	EA	01295	139-198-245	SN74LS245N	OCTAL BUSTRCVRNINV20P	U12

PARTS LIST	DESIGN ACTIVITY IDENTIFICATION AYDIN COMPUTER AND MONITOR DIVISION HORSHAM, PA. 19044	CONTRACT NO. 6012	CAGE CODE 20747	PL460-2269-501	REV C

LIST TITLE INF056-1 CARD ASSY	SUBCONTRACT NO.		SHEET NO. 3

FIND NO	QTY REQ	U/M	CAGE CODE	DOCUMENT NUMBER	PART OR IDENTIFYING NUMBER	NOMENCLATURE OR DESCRIPTION	NOTES
058	1	EA	01295	139-198-408	SN74LS08N	QUAD 2IN PAND 14P	U13
060	1	EA	01295	139-912-002	TL7705ACP	IC VOLT SUPERV 8 PIN	U15
062	1	EA	01295	139-198-244	SN74LS244N	OCTAL BUF NINV 20P	U16
064	6	EA	01295	139-198-374	SN74LS374N	OCTAL-D-LTH 3CO 20P	U17 U20 U23 U26 U28 U29
066	1	EA	01295	139-198-414	SN74LS14N	HEX INV SMT 14P	U18
068	1	EA	01295	139-198-367	SN74LS367AN	HEX BUS DRV34NINV 16P	U19
070	1	EA	01295	139-198-432	SN74LS32N	QUAD 2 INPT POS OR 14PIN	U21
072	1	EA	01295	139-198-138	SN74LS138N	3-8 DEC/DEM 16P	U22
074	1	EA	01295	139-198-438	SN74LS38N	QUAD 2IN NANDBUFOC14P	U24
076	1	EA	01295	139-198-155	SN74LS155AN	DEC/DEMUX TOTEM 16PN	U25
078	3	EA	01295	139-198-474	SN74LS74AN	DUAL FF/PR/CLR 14P	U27 U30 U31
080	4	EA	01295	139-198-253	SN74LS253N	DUAL DATA SEL/MUX 16P	U34 U35 U36 U37
094	1	EA	01295	108-941-008	C8928	IC SOCKET 28 PIN	
096	2	EA	01295	108-941-009	C8940	IC SOCKET 40 PIN	
098	1	EA	55322	108-936-007	SS-132-TT-2	SCKT STRP 1 ROW 32 PN	
100	1	FT	92194	113-001-006	QQW343S26SIT	WIRE BUS 26 AWG	
				AD 460-2269-501		ASSEMBLY DRAWING - INF056-1 CARD ASSY	
				SD 600-0619		SCHEMATIC DIAGRAM - SCHEM DIAG INF056	

REVISIONS					
ZONE	LTR	DESCRIPTION		DATE	APPROVED
	[-]	RELEASED		11/12/90	R.VOLZ
	A	REVISED PER ECO 20964	WTW 18JAN91	1/18/91	[illegible]
	B	REV PER ECO 21141	[illegible]		
	C	REV PER ECO 21910	A.A.	7/1/91	[illegible]
	D	REV PER ECO 22002	[illegible]	[illegible]	[illegible]

SHEET	46	47	48	49	50	51	52	53	54	55	56	57	58	59	60
REV															
SHEET	31	32	33	34	35	36	37	38	39	40	41	42	43	44	45
REV															
SHEET	16	17	18	19	20	21	22	23	24	25	26	27	28	29	30
REV															
SHEET	1	2	3	4	5	6	7	8	9	10	11	12	13	14	15
REV	D	D	C	D	[-]	D	[-]	C	C						

	6012-9602
NEXT ASSY.	USED ON
APPLICATION	

DRAWN	NELSON W.T.WARD	DATE 26NOV90
CHECKED	W.T.WARD	3DEC90
DRAFTING	W.T.WARD	3DEC90
ENGINEER	NELSON GREENIG	4DEC90
APPROVED	R.S.VOLZ	12/13/90
MAGNETIC MEDIA		

AYDIN COMPUTER AND MONITOR DIVISION
700 DRESHER ROAD
HORSHAM, PA. 19044

INF056

SIZE	CAGE CODE	DOCUMENT NO.	REV.
B	20747	SD600-0619	D

SHEET NO. 00 OF 9

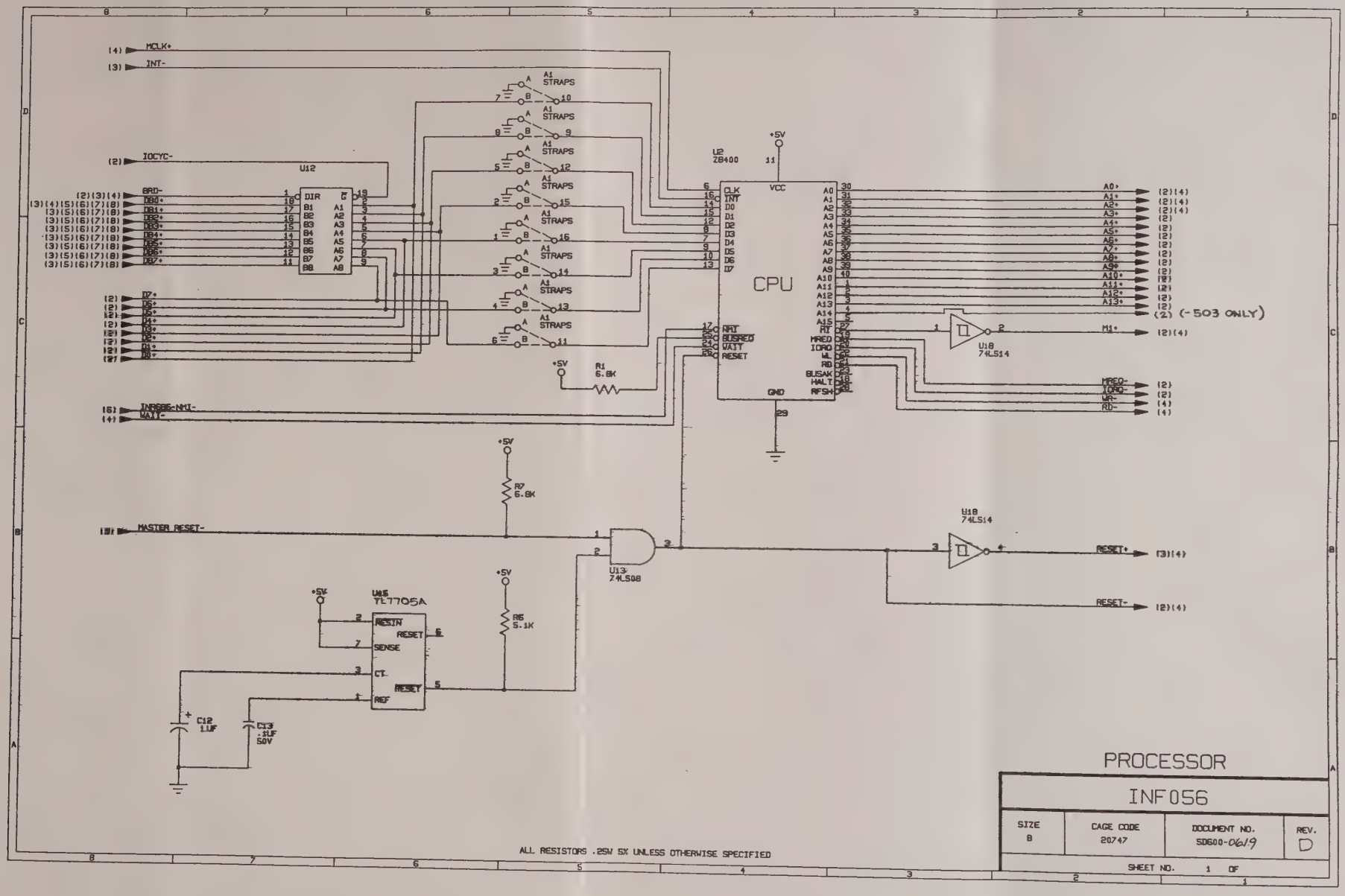
(4) MCLK+
(3) INT-
(2) IOCYC-
U12
(2)(3)(4) SRD-
(3)(4)(5)(6)(7)(8) DB0+
(3)(5)(6)(7)(8) DB1+
(3)(5)(6)(7)(8) DB2+
(3)(5)(6)(7)(8) DB3+
(3)(5)(6)(7)(8) DB4+
(3)(5)(6)(7)(8) DB5+
(3)(5)(6)(7)(8) DB6+
(3)(5)(6)(7)(8) DB7+
DIR
G
B1 B2 B3 B4 B5 B6 B7 B8
A1 A2 A3 A4 A5 A6 A7 A8
A1 STRAPS
U2 Z8400
CPU
CLK INT D0 D1 D2 D3 D4 D5 D6 D7
VCC
GND
NMI WAIT BUSREQ RESET
A0 A1 A2 A3 A4 A5 A6 A7 A8 A9 A10 A11 A12 A13 A14 A15 RFSH MREQ IORQ WR RD BUSAK HALT
•5V
R1 6.8K
U18 74LS14
M1+ (2)(4)
MREQ- (2)
IORQ- (2)
WR- (4)
RD- (4)
(2) (-503 ONLY)
(16) INRSOS-NMI-
(4) WAIT-
R7 6.8K
(18) MASTER RESET-
U13 74LS08
RESET+ (3)(4)
RESET- (2)(4)
U15 TL7705A
RESIN RESET SENSE CT REF
R6 5.1K
C12 1UF
C13 .1UF 50V
ALL RESISTORS .25W 5% UNLESS OTHERWISE SPECIFIED
PROCESSOR
INF056
SIZE B
CAGE CODE 20747
DOCUMENT NO. SD600-0619
REV. D
SHEET NO. 1 OF

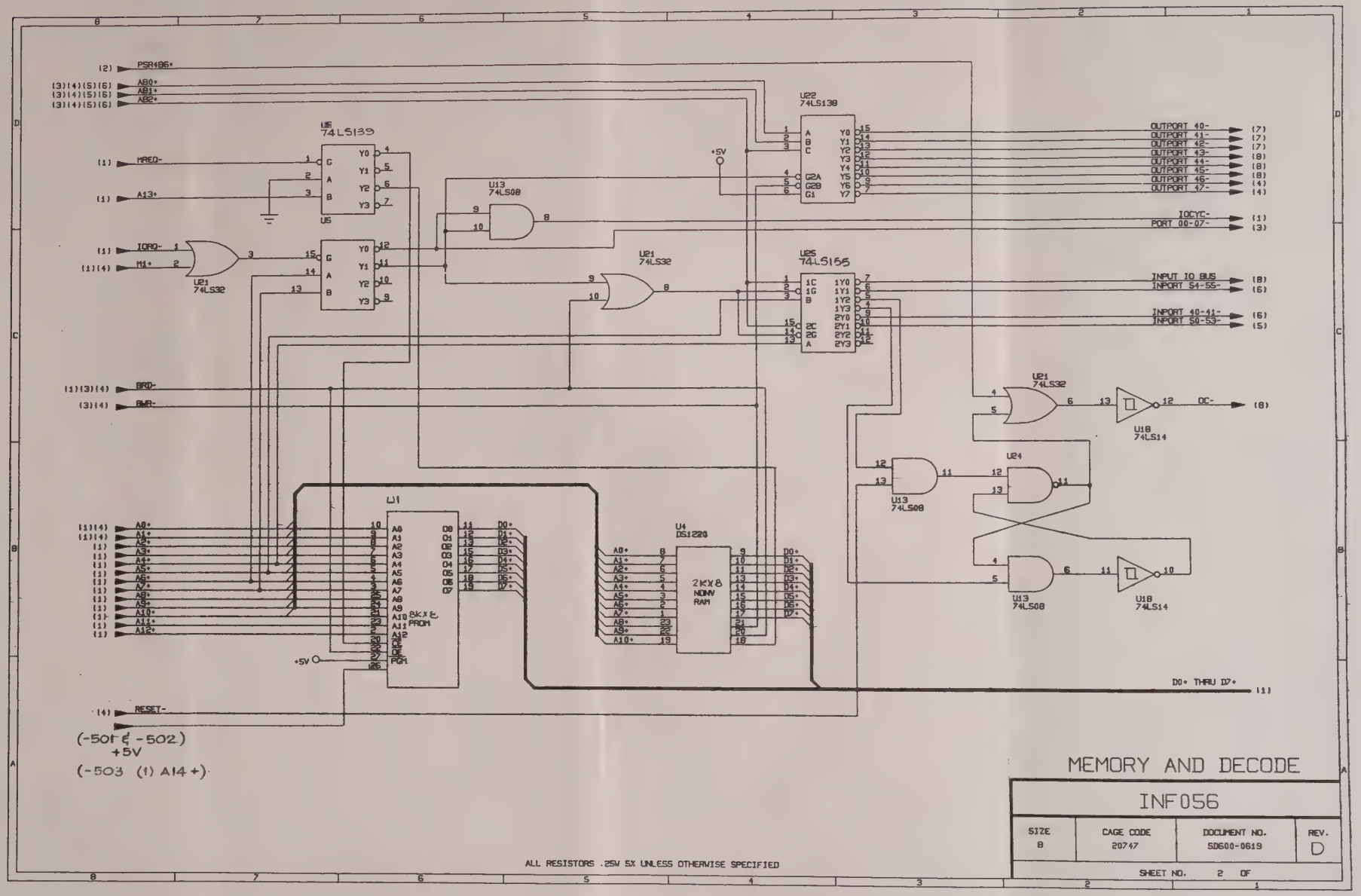

ALL RESISTORS .25W 5% UNLESS OTHERWISE SPECIFIED

MEMORY AND DECODE

INF056

SIZE	CAGE CODE	DOCUMENT NO.	REV.
B	20747	SD600-0619	D

SHEET NO. 2 OF

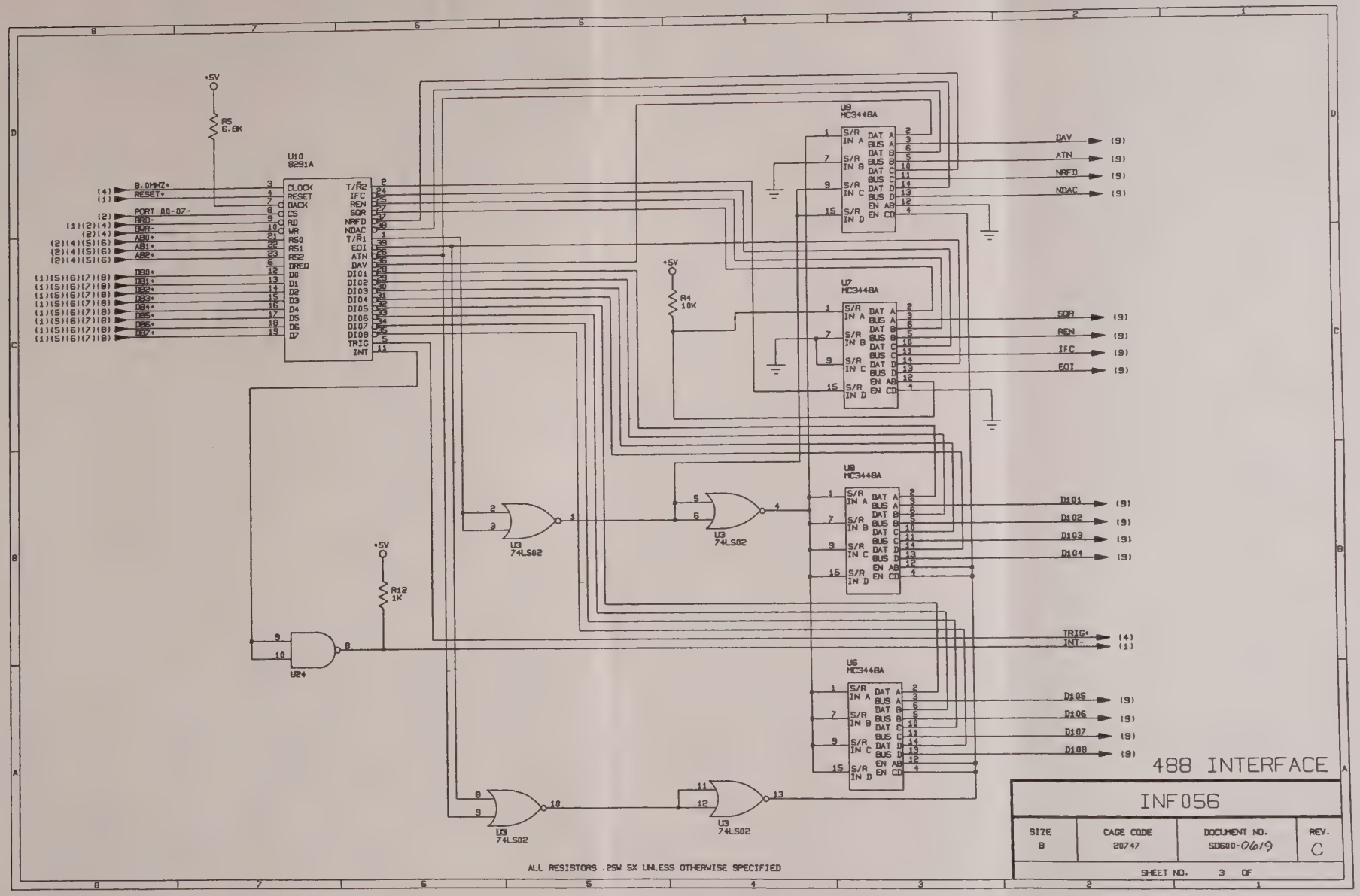
488 INTERFACE
INF056
SIZE B
CAGE CODE 20747
DOCUMENT NO. SD600-0619
REV. C
SHEET NO. 3 OF
ALL RESISTORS .25W 5% UNLESS OTHERWISE SPECIFIED
U10 8291A
U9 MC3448A
U7 MC3448A
U8 MC3448A
U5 MC3448A
U3 74LS02
U24
R5 6.8K
R4 10K
R12 1K
+5V
DAV
ATN
NRFD
NDAC
SQR
REN
IFC
EOI
D101
D102
D103
D104
D105
D106
D107
D108
TRIG*
INT-

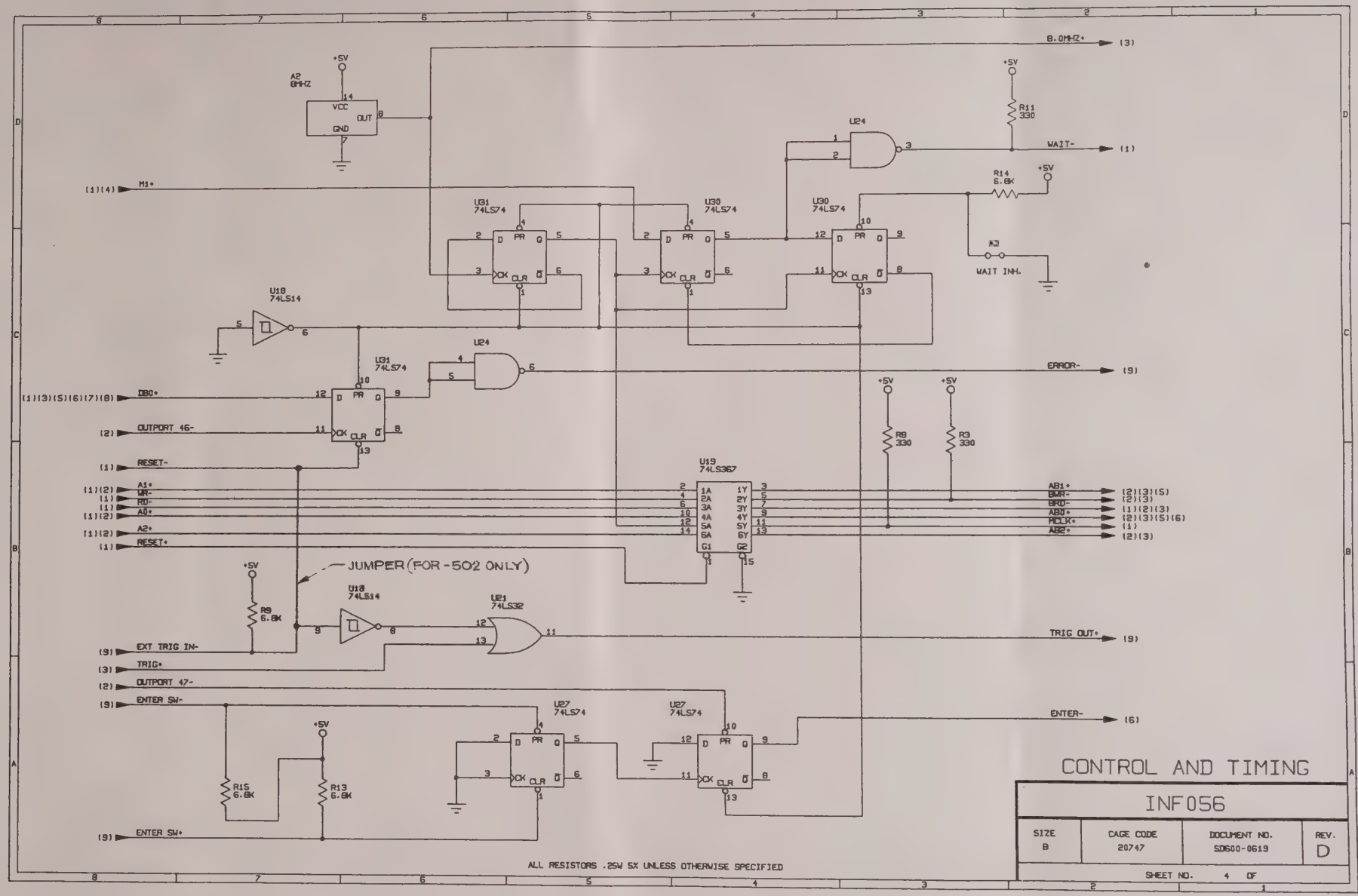

CONTROL AND TIMING

INF056

SIZE	CAGE CODE	DOCUMENT NO.	REV.
B	20747	SD600-0619	D

SHEET NO. 4 OF

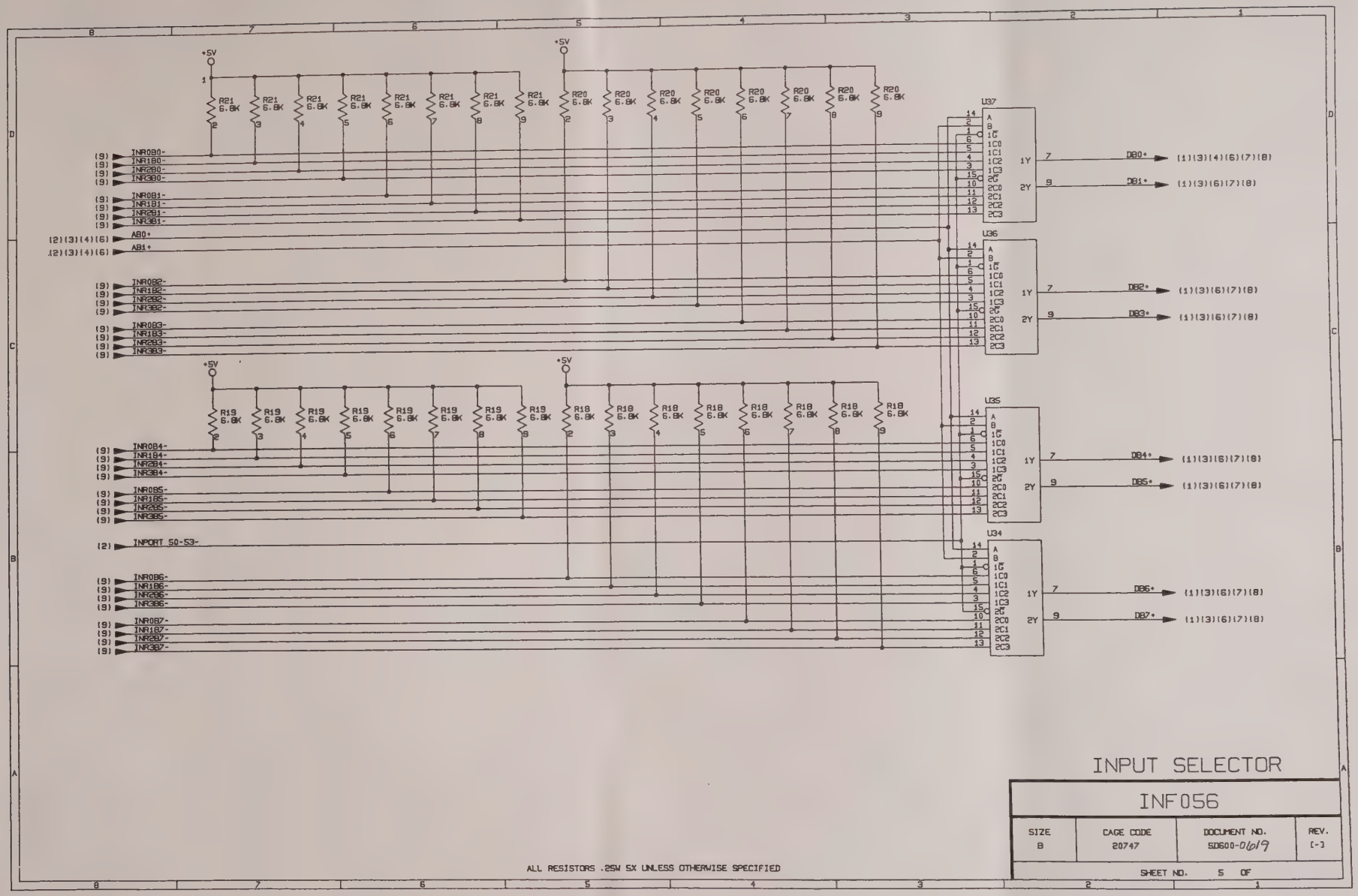

ALL RESISTORS .25W 5% UNLESS OTHERWISE SPECIFIED

INPUT SELECTOR

INF056

SIZE	CAGE CODE	DOCUMENT NO.	REV.
B	20747	50600-0619	[-]

SHEET NO. 5 OF

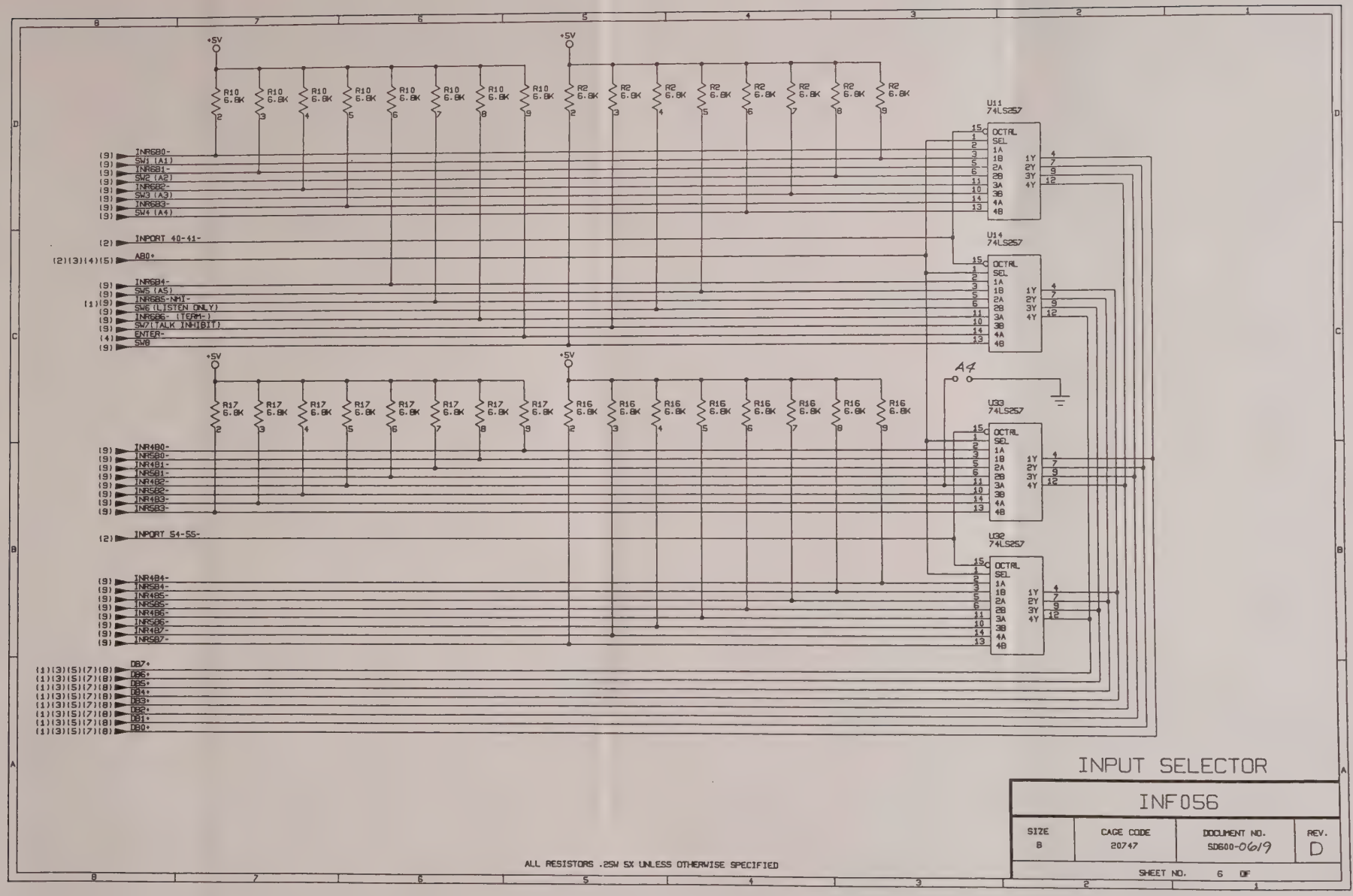

ALL RESISTORS .25W 5% UNLESS OTHERWISE SPECIFIED

INPUT SELECTOR

INF056

SIZE	CAGE CODE	DOCUMENT NO.	REV.
B	20747	SD600-0619	D

SHEET NO. 6 OF

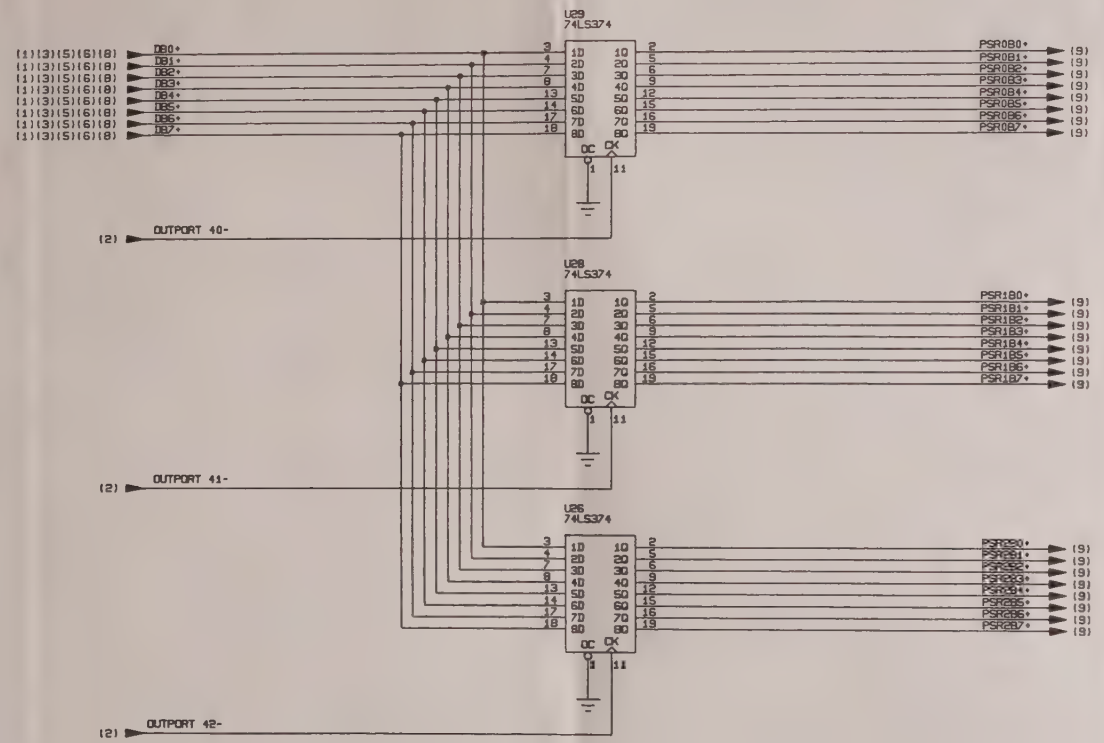

ALL RESISTORS .25W 5% UNLESS OTHERWISE SPECIFIED

OUTPUT STORAGE REGISTERS

INF056			
SIZE B	CAGE CODE 20747	DOCUMENT NO. SD600-0619	REV. (-)
SHEET NO. 7 OF			

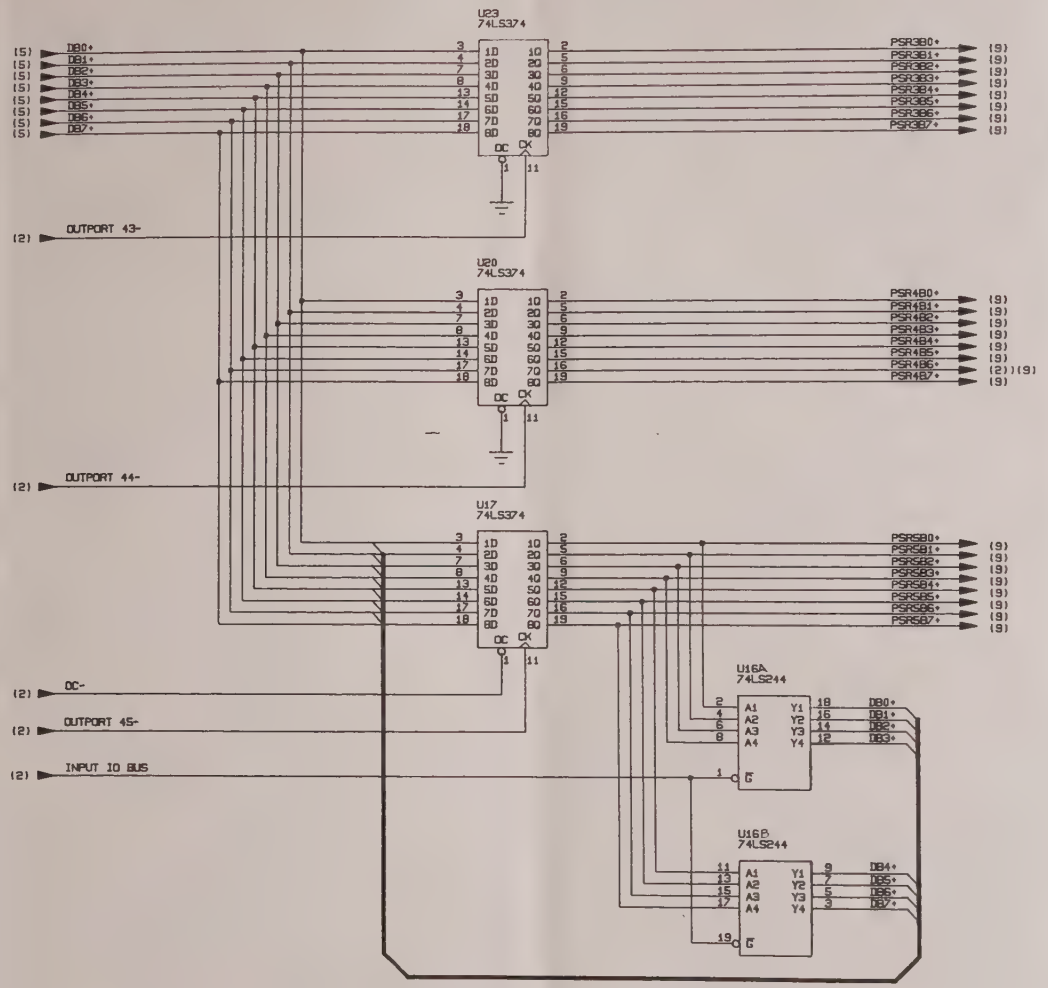

ALL RESISTORS .25W 5% UNLESS OTHERWISE SPECIFIED

I/O BUS AND OUTPUT STORAGE REGISTERS

INF056			
SIZE B	CAGE CODE 20747	DOCUMENT NO. SD600-06/9	REV. C
SHEET NO. 6 OF			

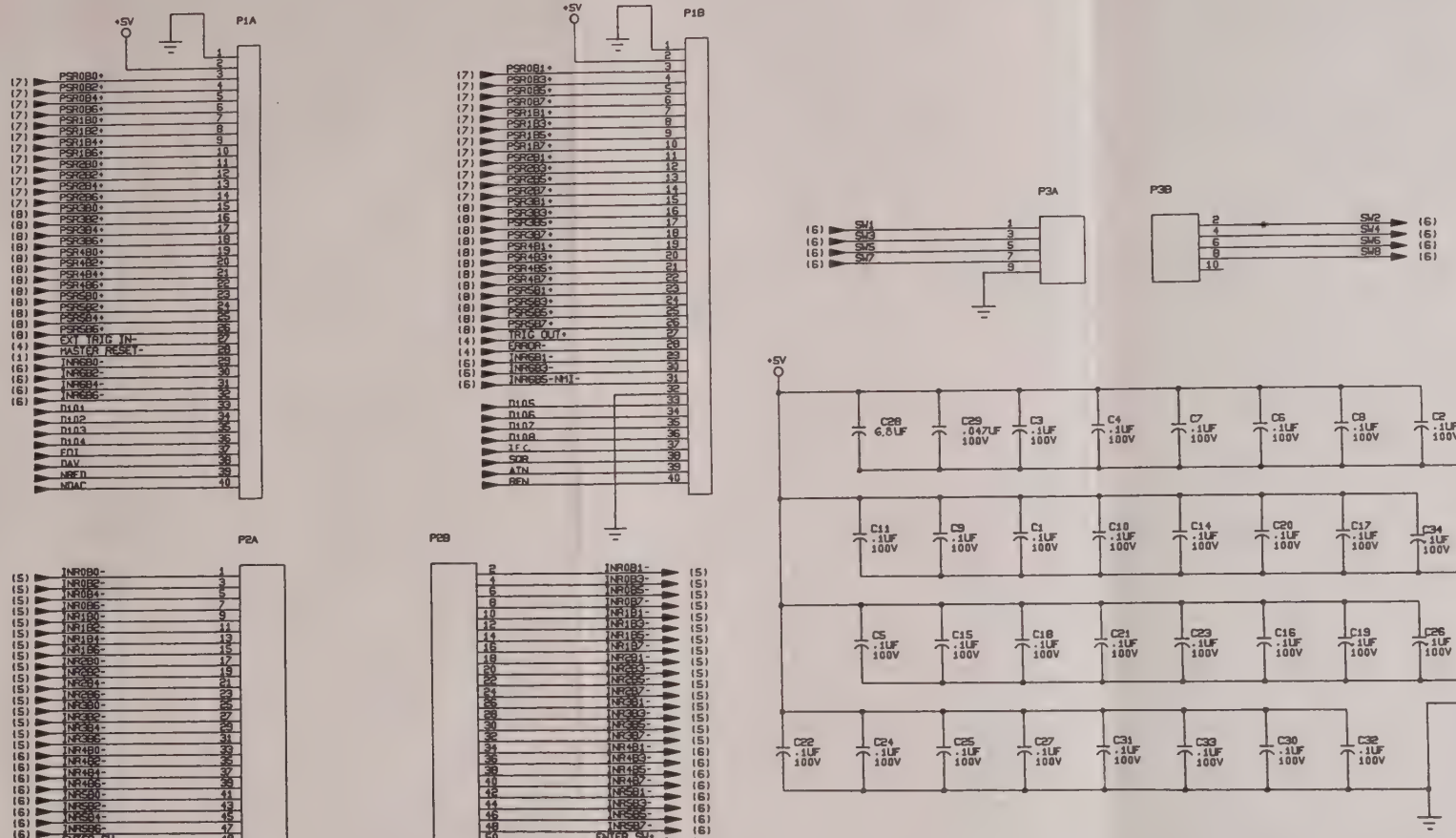

CONNECTORS

ALL RESISTORS .25W 5% UNLESS OTHERWISE SPECIFIED

INF056			
SIZE B	CAGE CODE 20747	DOCUMENT NO. SD600-0619	REV. C
SHEET NO. 9 OF			

730-2422

REVISIONS				
ZONE	LTR	DESCRIPTION	DATE	APPROVED
	B	REVISED PER ECO 15634	12-2-87	[signature]
	C	REVISED PER ECO 15925	2/8/88	[signature]
	D	REVISED PER ECO 16002	3/4/88	[signature]
	E	REVISED PER ECO 16332	3/29/88	[signature]
	F	REVISED PER ECO 22196	9-5-91	[signature]
	G	REVISED PER ECO. 22798	1-28-92	T. BORAWSKI

GENERAL NOTES

1. For additional information see Assembly Drawing 355-0181-501
2. Unless otherwise indicated, all single wires are MIL-W-16878, type B.
3. Hardware: (lugs, pins, etc.)

2) 108-213-004 CONTACT —

4) 108-107-046 UNIFLOK

4. DELETE WIRE ON SH. 5. - NOTE COLOR

5. ADD WIRES ON SHEETS 2-4

6. *-INDICATES 80PIN CONNECTOR, 108-213-140

**-CONNECTION TO OTHER WL

***-BUS CONNECTION

BLK **-80 PIN CONNECTOR WITH CONNECTION TO OTHER WL.

7. FOR ASSEMBLIES USING 355-0181-509 SKIP LINES 51 & 52

SHEET	1	2	3	4	5	6	7	8	9	10	11	12	13	14	15	16	17	18	19	20	21	22	23
REVISION	G	G	G	G	G		-	-	-	-	-	-	-	-	-	-	-	-	-	-	-	-	-

NEXT ASSY	USED ON	
DISTRIBUTION	APPLICATION	

UNLESS OTHERWISE SPECIFIED DIMENSIONS ARE IN INCHES TOLERANCE ON FRACTIONS ± DECIMALS ± ANGLES ±

MATERIAL

FINISH

CONTRACT NO.

DRAWN J. E. BONITA DATE 10-13-86

CHECKED

DRAFTING

ENGINEER [signature] 11-26-86

MFG [signature] 11-26-86

APPROVED [signature] 11-26-86

AYDIN MONITOR SYSTEMS
FORT WASHINGTON, PENNA. 19034

WIRE LIST 335A-12-2X-3X
IEEE PROGRAM ADDENDUM

SIZE	CODE IDENT NO.		REV.
B	20747	730-2422	B

SCALE

SHEET [illegible]

800-0362A

ADD WIRES TO CNN - - -
LIBRARY

FUNCTION NAME/CODE	LINE	FROM JKT STR	FROM WIRE LG	FROM WIRE STR	FROM TIN	FROM CLR	FROM SLV	FROM HDW	FROM LOCATION	CABLE NO AND LENGTH	TO LOCATION	TO JKT STR	TO WIRE LG	TO WIRE STR	TO TIN	TO CLR	TO SLV	TO HDW	REMARKS (See Note)
D101	1			1/4	✓	BLK	✓	–	J17-1	W99	A1A17 * P1-m			5/32	–	BLK	–	2	113-205-012
D102	2			1/4	✓	WHT	✓	–	J17-2		A1A17 * P1-n			5/32	–	WHT	–	2	12 COND 26 AWG
D103	3			1/4	✓	RED	✓	–	J17-3		A1A17 * P1-p			5/32	–	RED	–	2	
D104	4			1/4	✓	GRN	✓	–	J17-4		A1A17 * P1-r			5/32	–	GRN	–	2	
D105	5			1/4	✓	ORN	✓	–	J17-13		A1A17 * P1-33			5/32	–	ORN	–	2	
D106	6			1/4	✓	BLUE	✓	–	J17-14		A1A17 * P1-34			5/32	–	BLUE	–	2	
D107	7			1/4	✓	BRN	✓	–	J17-15		A1A17 * P1-35			5/32	–	BRN	–	2	
D108	8			1/4	✓	YEL	✓	–	J17-16		A1A17 * P1-36			5/32	–	YEL	–	2	
—	9					VIO			—		—					VIO			
—	10					GRY			—		—					GRY			
—	11					PINK			—		—					PINK			
—	12					TAN			—		—					TAN			
	13																		
SHIELD	14			1/4	✓	BLK	✓	–	J17-12		J17 GND LUG			1/4	–	BLK	–	–	22 AWG
	15																		
REN	16			1/4	✓	CENT	✓	–	J17-17	W34	A1A17 * P1-40			5/32	–	CENT	–	2	113-301-004
RTN	17			1/4	✓	SHIELD	✓	–	J17-24		A1A15-1			1/2	✓	SHIELD	–	–	RG174
	18																		
EOI	19			1/4	✓	CENT	✓	–	J17-5	W35	A1A17 * P1-S			5/32	–	CENT	–	2	113-301-004
RTN	20			1/4	✓	SHIELD	✓	–	J17-24		A1A15-1			1/2	✓	SHIELD	–	–	RG174
	21																		
DAV	22			1/4	✓	GRN	✓	–	J17-6	W36	A1A17 * P1-t			5/32	–	GRN	–	2	26 AWG TW PR
RTN	23			1/4	✓	BLK	✓	–	J17-18		A1A15-1			1/2	✓	BLK	–	–	
	24																		
	25																		

8

DRAWN
DATE
SIZE B
CODE IDENT NO. 20747
SCALE
SHEET 2
REV C
TITLE 730-2422

800-0142A, 1-24-68

ADD WIRES TO CHASSIS & LIBRARY

W42 RIBBON CABLE LENGTH = 15 IN MEASURED FROM HOLDING CLIP AT LOCATION A1A24 TO A1A25

FUNCTION NAME/CODE	LINE	FROM JKT STR	FROM WIRE LG	FROM WIRE STR	FROM TIN	FROM CLR	FROM SLV	FROM HDW	FROM LOCATION	CABLE NO AND LENGTH	TO LOCATION	TO JKT STR	TO WIRE LG	TO WIRE STR	TO TIN	TO CLR	TO SLV	TO HDW	REMARKS (See Note)
NRFD	26			1/4	✓	GRN	✓	–	J17-7	W37	A1A17 * P1-M			5/32	–	GRN	–	2	26 AWG 8
RTN	27			1/4	✓	BLK	✓	–	J17-19		A1A15-1			1/2	✓	BLK	–	–	TW PR
	28																		
NDAC	29			1/4	✓	GRN	✓	–	J17-8	W38	A1A17 * P1-V			5/32	–	GRN	–	2	26 AWG 8
RTN	30			1/4	✓	BLK	✓	–	J17-20		A1A15-1			1/2	✓	BLK	–	–	TW PR
	31																		
IFC	32			1/4	✓	GRN	✓	–	J17-9	W39	A1A17 * P1-37			5/32	–	GRN	–	–	26 AWG 8
RTN	33			1/4	✓	BLK	✓	–	J17-21		A1A15-1			1/2	✓	BLK	–	–	TW PR
	34																		
SRQ	35			1/4	✓	GRN	✓	–	J17-10	W40	A1A17 * P1-38			5/32	–	GRN	–	2	26 AWG 8
RTN	36			1/4	✓	BLK	✓	–	J17-22		A1A15-1			1/2	✓	BLK	–	–	TW PR
	37																		
ATN	38			1/4	✓	GRN	✓	–	J17-11	W41	A1A17 * P1-39			5/32	–	GRN	–	2	26 AWG 8
RTN	39			1/4	✓	BLK	✓	–	J17-23		A1A15-1			1/2	✓	BLK	–	–	TW PR
	40																		
A1	41			1/2	✓	RED	–	–	S33-E1	W42	A1A17 P3-1			–	–	RED	–	–	10 COND RIBBON
A2	42			1/2	✓	GRY	–	–	S33-E2		A1A17 P3-2			–	–	GRY	–	–	CABLE PART OF
A3	43			1/2	✓	GRY	–	–	S33-E3		A1A17 P3-3			–	–	GRY	–	–	ASSY 351-0388-001
A4	44			1/2	✓	GRY	–	–	S33-E4		A1A17 P3-4			–	–	GRY	–	–	WIRES TERMINATED
A5	45			1/2	✓	GRY	–	–	S33-E5		A1A17 P3-5			–	–	GRY	–	–	WITH 108-273-110
LISTEN ONLY	46			1/2	✓	GRY	–	–	S33-E6		A1A17 P3-6			–	–	GRY	–	–	
TALK INHIBIT	47			1/2	✓	GRY	–	–	S33-E7		A1A17 P3-7			–	–	GRY	–	–	
SPARE	48			1/2	✓	GRY	–	–	S33-E8		A1A17 P3-8			–	–	GRY	–	–	
GND	49			1/2	✓	GRY	–	–	S33-E9		A1A17 P3-9			–	–	GRY	–	–	
—	50			–	–	GRY	–	–	—		A1A17 P3-10			–	–	GRY	–	–	

DRAWN
DATE
SIZE B
CODE IDENT NO. 20747
SCALE
SHEET 3
730-2422
REV G
TITLE

800-0142A, 1-24-68

ADD WIRES TO CHASSIS
& LIBRARY.

FUNCTION NAME/CODE	LINE	FROM								CABLE NO AND LENGTH	TO								REMARKS (See Note)
		JKT STR	WIRE LG	WIRE STR	TIN	CLR	SLV	HDW	LOCATION		LOCATION	JKT STR	WIRE LG	WIRE STR	TIN	CLR	SLV	HDW	
EXT CLK	51			1/2	✓	CENT	✓	-	J1S-1	W83	A1A1-1S *			5/32	-	CENT	-	2	113-301-004 ▽7
RTN	52			1/2	✓	SHIELD	✓	-	J1S-2		A1A2-38			1/2	-	SHIELD	-	-	RG174 ▽7
	53	W83 ALREADY IN CHASSIS, NOTE LOOSE UNSOLDERED END AT REAR PLATE LOCATION																	
	54																		
	55																		
	56																		
	57																		
	58																		
	59																		
	60																		
	61																		
	62																		
	63																		
	64																		
	65																		
	66																		
	67																		
	68																		
	69																		
	70																		
	71																		
	72																		
	73																		
	74																		
	75																		

DRAWN
DATE

SIZE B | CODE IDENT NO. 20747 | 730-2422 | REV

SCALE

SHEET 4

TITLE

800-0142A, 1-24-68

DELETE WIRE FROM LIBRARY

FUNCTION NAME/CODE	LINE	FROM								CABLE NO AND LENGTH	TO								REMARKS (See Note)
		JKT STR	WIRE LG	WIRE STR	TIN	CLR	SLV	HDW	LOCATION		LOCATION	JKT STR	WIRE LG	WIRE STR	TIN	CLR	SLV	HDW	
RESET	76			5/32	-	WHT	-	4	A,A15-4	10.0	A,A,-E*			5/32	-	WHT	-	2	26 AWG LIB. LINE #263
	77																		
	78																		
	79																		
	80																		
	81																		
	82																		
	83																		
	84																		
	85																		
	86																		
	87																		
	88																		
	89																		
	90																		
	91																		
	92																		
	93																		
	94																		
	95																		
	96																		
	97																		
	98																		
	99																		
	100																		

DRAWN
DATE
SIZE B
CODE IDENT NO. 20747
WL 730-2422
SHEET 5 OF 5
REV G
SCALE
TITLE

800-D142A, 1-24-68

GENERAL NOTES

1. For additional information see Assembly Drawing 355-0181-501
2. Unless otherwise indicated, all single wires are MIL-W-16878, type B.
3. Hardware: (lugs, pins, etc.)

1. RFO LUG 118-202-216
2. CONNECTOR 108-405-102
3. VARILOK 108-107-046
4. RFO LUG 118-048-003
5. MINI LUG 118-202-001
6. CONNECTOR 108-273-150

4. SW...

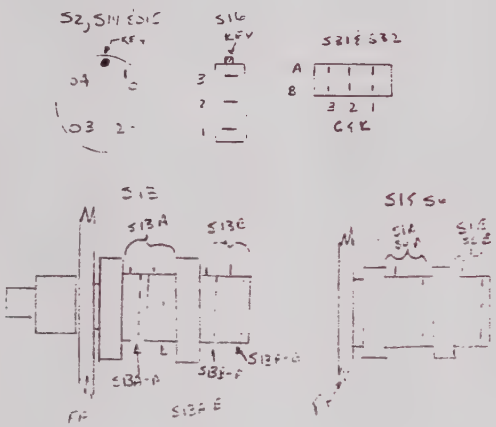

5. ...

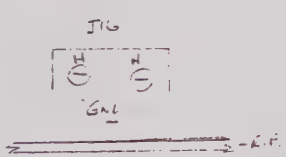

6. INDICATED WIRING MUST BE RUN AS SHOWN

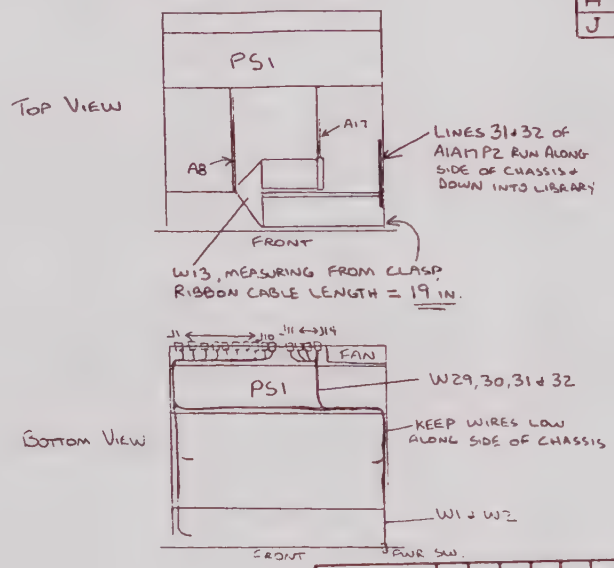

REVISIONS				
ZONE	LTR	DESCRIPTION	DATE	APPROVED
	B	REVISED PER ECO 15763	1/1/88	[illegible]
	C	REVISED PER ECO 15879	2/3/88	[illegible]
	D	REVISED PER ECO 15965	2/3/88	[illegible]
	E	REVISED PER ECO 16001	2/19/88	[illegible]
	F	REVISED PER ECO 16158	3/1/88	[illegible]
	G	REVISED PER ECO 16330	3/29/88	[illegible]
	H	REV PER ECO 21329 TN	3-20-91	[illegible]
	J	REV PER ECO 21819	7-11-91	[illegible]

SHEET	1	2	3	4	5	6	7	8	9	10	11	12	13	14	15	16	17	18	19	20	21	22	23
REVISION	J	B	A	H	A	A	C	A	G	A	H	G	G	E	A	G	A	B	G	E			

UNLESS OTHERWISE SPECIFIED DIMENSIONS ARE IN INCHES TOLERANCE ON FRACTIONS ± DECIMALS ± ANGLES ±	CONTRACT NO.		
	DRAWN J. [illegible]	DATE 1/1/87	
	CHECKED		
MATERIAL	DRAFTING		
	ENGINEER [illegible]	11/1/87	
	MFG W.H. [illegible]	2/1/87	
FINISH	APPROVED [illegible]		

AYDIN MONITOR SYSTEMS
FORT WASHINGTON, PENNA. 19034

CHASSIS WIRE LIST
MODEL 335A-LTC

SIZE	CODE IDENT. NO.		REV
B	20747	WL 750-2461	J
SCALE		SHEET 1 OF 20	

DISTRIBUTION	NEXT ASSY	USED ON
	APPLICATION	

ADD JUMPERS
P/N 119-004-023
TO TB1
3-4
5-6
7-8

FUNCTION NAME/CODE	LINE	FROM JKT STR	FROM WIRE LG	FROM WIRE STR	FROM TIN	FROM CLR	FROM SLV	FROM HDW	FROM LOCATION	CABLE NO AND LENGTH	TO LOCATION	TO JKT STR	TO WIRE LG	TO WIRE STR	TO TIN	TO CLR	TO SLV	TO HDW	REMARKS (See Note)
AC H	1			1/2	✓	BLK	✓	–	J16-H		XF1-1			1/2	✓	BLK	✓	–	18 AWG
	2																		
AC H	3			1/2	✓	BLK	✓	–	XF1-2		TB1-1			1/4	–	BLK	–	1	18 AWG
AC N	4			1/2	✓	WHT	✓	–	J16-N		TB1-6			1/4	–	WHT	–	1	18 AWG
CHASSIS GND	5			1/2	✓	GRN	✓	–	J16-GND		TB1-8			1/4	–	GRN	–	1	18 AWG
	6																		
AC H	7			1/4	–	BLK	–	1	TB1-1	W1	S16-1			1/4	✓	BLK	✓	–	18 AWG
AC N	8			1/4	–	WHT	–	1	TB1-2		S16-2			1/4	✓	WHT	✓	–	18 AWG
SHIELD	9			1/4	–	SHIELD	–	1	TB1-8		—					SHIELD			113-219-218
	10																		
AC 115	11			1/4	–	BLK	–	1	TB1-4	W2	XDS29-1			1/4	✓	BLK	✓	–	22 AWG
AC N	12			1/4	–	WHT	–	1	TB1-6		XDS29-2			1/4	✓	WHT	✓	–	22 AWG
SHIELD	13			1/4	–	SHIELD	–	1	TB1-8		—					SHIELD			113-219-222
	14																		
AC H	15			1/4	–	BLK	–	1	TB1-2	W3	PS1-1			1/2	✓	BLK	✓	–	18 AWG
AC N	16			1/4	–	WHT	–	1	TB1-5		PS1-4			1/2	–	WHT	✓	–	18 AWG
AC 115	17			1/4	–	RED	–	1	TB1-4		PS1-3			1/2	✓	RED	✓	–	18 AWG
SHIELD	18			1/4	–	SHIELD	–	1	TB1-7		PS1 CHASSIS GND			1/4	–	SHIELD	–	1	113-219-318
	19																		
FAN 1	20			1/4	–	BLK	–	1	TB1-3	W4	FAN 1-1			1/4	✓	BLK	✓	–	22 AWG
FAN 2	21			1/4	–	WHT	–	1	TB1-5		FAN 1-2			1/4	–	WHT	✓	–	22 AWG
—	22			1/4	–	SHIELD	–	1	TB1-7		—					SHIELD			113-219-222
	23																		
	24																		
	25																		

DRAWN
DATE

TITLE

SIZE B
CODE IDENT NO. 20747
SCALE
730-24161
SHEET 2
REV B

800-0142A, 1-24-68

FUNCTION NAME/CODE	LINE	FROM: JKT STR	WIRE LG	WIRE STR	TIN	CLR	SLV	HDW	LOCATION	CABLE NO AND LENGTH	TO: LOCATION	JKT STR	WIRE LG	WIRE STR	TIN	CLR	SLV	HDW	REMARKS (See Note)
D. GND	26			1/4	-	Blk	-	1	PS1 +5 RTN		A1A15-1			1/2	✓	Blk	✓	-	18 AWG
D. GND	27			1/4	-	Blk	-	1	PS1 +5 RTN		A.A21-1			1/2	✓	Blk	✓	-	18 AWG
D. GND	28			1/4	-	Blk	-	1	PS1 +5 RTN		PS1 +5VC			1/4	-	Blk	-	1	22 AWG
D. GND	29			1/4	-	Blk	-	1	PS1 +5 (-S)		A.A2-1			1/2	✓	Blk	✓	-	22 AWG
D. GND	30			1/2	✓	Blk	✓	-	A1A2-1		A.A1 A1			5/32	-	Blk	-	2	22 AWG
D. GND	31			1/2	✓	Blk	✓	-	A1A2-1		A.A1 B1			5/32	-	Blk	-	2	22 AWG
D GND	32			1/2	✓	Blk	✓	-	A1A15-1		A.A21-1			1/2	✓	Blk	✓	-	22 AWG
D. GND	33			1/2	✓	Blk	-	-	A1A12-1		A.A13-A1			5/32	-	Blk	-	2	22 AWG
D GND	34			1/2	✓	Blk	-	-	A1A12-1		A.A13-B1			5/32	-	Blk	-	2	22 AWG
D GND	35			1/2	✓	Blk	✓	-	A A15-1		A.A16-A1			5/32	-	Blk	-	2	22 AWG
D. GND	36			1/2	✓	Blk	✓	-	A1A15-1		A.A16-B1			5/32	-	Blk	-	2	22 AWG
D GND	37			1/2	✓	Blk	✓	-	A1A21-1		A.A17-A1			5/32	-	Blk	-	2	22 AWG
D. GND	38			1/2	✓	Blk	✓	-	A1A21-1		A1A17-B1			5/32	-	Blk	-	2	22 AWG
	39																		
	40																		
	41																		
D GND	42			1/2	✓	Blk	✓	-	A1A23-1		E-1			1/2	✓	Blk	-	-	22 AWG
D GND	43			1/2	✓	Blk	-	-	E-1		E-2			1/2	✓	Blk	-	-	22 AWG
D GND	44			1/2	✓	Blk	-	-	E-2		E-3			1/2	✓	Blk	-	-	22 AWG
	45																		
SYS GND	46			1/4	-	Blk	-	4	E-7		A1A23-1			12	-	Blk	-	-	15 AWG
	47																		
D GND	48			1/2	✓	Blk	✓	-	A1A2-1		S32-2A			1/4	✓	Blk	✓	-	22 AWG
D GND	49			1/4	✓	Blk	✓	-	S32-2A		S31-2A			1/4	✓	Blk	✓	-	26 AWG
	50																		

DRAWN
DATE
TITLE
SIZE B
CODE IDENT NO. 20747
SCALE
730-2461
SHEET 3
REV A

800-0142A, 1-24-68

FUNCTION NAME/CODE	LINE	FROM								CABLE NO AND LENGTH	TO							REMARKS (See Note)
		JKT STR	WIRE LG	WIRE STR	TIN	CLR	SLV	HDW	LOCATION		LOCATION	JKT STR	WIRE LG	WIRE STR	TIN	CLR	SLV	HDW	
A GND	51			1/4	–	Blk	–	1	PS1 ±15V C		A,A10-38			1/2	✓	Blk	✓	–	18 AWG
A GND	52			1/4	–	Blk	–	1	PS1 ±15VCs		A,A2-38			1/2	✓	Blk	✓	–	22 AWG
A GND	53			1/2	✓	Blk	✓	–	A.A2-38		A.A1 A38			3/32	–	Blk	–	2	22 AWG
A GND	54			1/2	✓	Blk	✓	–	A.A2-38		A.A1 B38			5/32	–	Blk	–	2	22 AWG
A GND	55			1/2	✓	Blk	✓	–	A.A10-38		A.A13 A38			5/32	–	Blk	–	2	22 AWG
A GND	56			1/2	✓	Blk	✓	–	A.A10-38		A.A13 B38			5/32	–	Blk	–	2	22 AWG
A GND	57			1/2	✓	Blk	✓	–	A,A10-38		A.A1C A38			5/32	–	Blk	–	2	22 AWG
A GND	58			1/2	✓	Blk	✓	–	A.A10-38		A.A1C B38			5/32	–	Blk	–	2	22 AWG
–	59																		
–	60																		
+5V	61			1/4	–	YEL	–	1	PS1 +5V		A,A15-3			1/2	✓	YEL	✓	–	18 AWG
+5V	62			1/4	–	YEL	–	1	PS1 +5V		A,A21-3			1/2	✓	YEL	✓	–	18 AWG
+5V	63			1/4	–	YEL	–	1	PS1 +5 S		A,A2-3			1/2	✓	YEL	✓	–	22 AWG
+5V	64			1/2	✓	YEL	✓	–	A.A15-3		A,A21-3			1/2	✓	YEL	✓	–	22 AWG
+5V	65			1/2	✓	YEL	✓	–	A,A2-3		A,A1 A2			5/32	–	YEL	–	2	22 AWG
+5V	66			1/2	✓	YEL	✓	–	A,A2-3		A.A1 B2			5/32	–	YEL	–	2	22 AWG
+5V	67			1/2	✓	YEL	✓	–	A.A12-3		A,A13 A2			5/32	–	YEL	–	2	22 AWG
+5V	68			1/2	✓	YEL	✓	–	A.A12-3		A,A13 B2			5/32	–	YEL	–	2	22 AWG
+5V	69			1/2	✓	YEL	✓	–	A,A15-3		A,A16-A2			5/32	–	YEL	–	2	22 AWG
+5V	70			1/2	✓	YEL	✓	–	A,A15-3		A.A1C B2			5/32	–	YEL	–	2	22 AWG
+5V	71			1/2	✓	YEL	✓	–	A,A21-3		A,A17 A2			5/32	–	YEL	–	2	22 AWG
+5V	72			1/2	✓	YEL	✓	–	A,A21-3		A,A17 B2			5/32	–	YEL	–	2	22 AWG
+5V	73			1/2	✓	YEL	✓	–	A,A23-3		E-5			1/2	✓	YEL	–	–	22 AWG
	74			1/2	V	YEL	–	–	E5		E4			1/2	V	YEL	–	–	22 AWG
+5V	75			1/4	✓	YEL	✓	–	S14-2		E-4			1/2	✓	YEL	–	–	22 AWG

DRAWN
DATE
TITLE
SIZE B
CODE IDENT NO. 20747
SCALE
730-24461
SHEET 4
REV H

800-0142A, 1-24-68

FUNCTION NAME/CODE	LINE	FROM: JKT STR	WIRE LG	WIRE STR	TIN	CLR	SLV	HDW	LOCATION	CABLE NO AND LENGTH	TO: LOCATION	JKT STR	WIRE LG	WIRE STR	TIN	CLR	SLV	HDW	REMARKS (See Note)
+15V	76			1/1	–	RED	–	1	PS1 +15V		A1A15-39			1/2	✓	RED	✓	–	18 AWG
+15V	77			1/4	–	RED	–	1	PS1 +15V		A1A21-39			1/2	✓	RED	✓	–	18 AWG
+15V	78			1/4	–	RED	–	1	PS1 +15V S		A1A2-39			1/2	✓	RED	✓	–	22 AWG
+15V	79			1/2	✓	RED	✓	–	A1A2-39		A1A1A39			5/32	–	RED	–	2	22 AWG
+15V	80			1/2	✓	RED	✓	–	A1A2-39		A1A1B39			5/32	–	RED	–	2	22 AWG
+15V	81			1/2	✓	RED	✓	–	A1A15-39		A1A16A39			5/32	–	RED	–	2	22 AWG
+15V	82			1/2	✓	RED	✓	–	A1A15-39		A1A16B39			5/32	–	RED	–	2	22 AWG
	83																		
	84																		
	85																		
	86																		
	87																		
-15V	88			1/4	–	VIO	–	1	PS1 -15V		A1A15-41			1/2	✓	VIO	✓	–	18 AWG
-15V	89			1/4	–	VIO	–	1	PS1 -15V		A1A21-41			1/2	✓	VIO	✓	–	18 AWG
-15V	90			1/4	–	VIO	–	1	PS1 -15V S		A1A2-41			1/2	✓	VIO	✓	–	22 AWG
-15V	91			1/2	✓	VIO	✓	–	A1A2-41		A1A1A40			5/32	–	VIO	–	2	22 AWG
-15V	92			1/2	✓	VIO	✓	–	A1A2-41		A1A1B40			5/32	–	VIO	–	2	22 AWG
-15V	93			1/2	✓	VIO	✓	–	A1A12-41		A1A13A40			5/32	–	VIO	–	2	22 AWG
-15V	94			1/2	✓	VIO	✓	–	A1A12-41		A1A13B40			5/32	–	VIO	–	2	22 AWG
-15V	95			1/2	✓	VIO	✓	–	A1A15-41		A1A16A40			5/32	–	VIO	–	2	22 AWG
-15V	96			1/2	✓	VIO	✓	–	A1A15-41		A1A16B40			5/32	–	VIO	–	2	22 AWG
	97																		
	98																		
	99																		
	100																		

DRAWN
DATE
SIZE B
CODE IDENT NO. 20747
SCALE
TITLE
730-2461
SHEET 5
REV A

800-0142A, 1-24-68

FUNCTION NAME/CODE	LINE	FROM								CABLE NO AND LENGTH	TO								REMARKS (See Note)
		JKT STR	WIRE LG	WIRE STR	TIN	CLR	SLV	HDW	LOCATION		LOCATION	JKT STR	WIRE LG	WIRE STR	TIN	CLR	SLV	HDW	
D GND	101			1/2	✓	BLK	-	-	E-1		S1A-2			1/4	✓	Blk	-	-	28 AWG
D.GND	102			1/4	✓	Blk	-	-	S1A-2		S1B-1			1/4	✓	BLK	-	-	26 AWG
	103																		
D.GND	104			1/2	✓	Blk	-	-	E-1		S2-3			1/4	✓	Blk	✓	-	26 AWG
D.GND	105			1/4	✓	Blk	✓	-	S2-3		S2-4			1/4	✓	Blk	✓	-	26 AWG
D.GND	106			1/4	✓	Blk	✓	-	S2-4		S3-C			1/4	✓	Blk	✓	-	26 AWG
	107																		
D.GND	108			1/2	✓	Blk	-	-	E2		S4A-2			1/4	✓	Blk	✓	-	26 AWG
D.GND	109			1/4	✓	Blk	✓	-	S4A-2		S4A-4			1/4	✓	Blk	✓	-	26 AWG
D GND	110			1/4	✓	Blk	✓	-	S4A-4		S4A-6			1/4	✓	Blk	✓	-	26 AWG
D.GND	111			1/4	✓	Blk	✓	-	S4A-6		S4A-8			1/4	✓	Blk	✓	-	26 AWG
D GND	112			1/4	✓	Blk	✓	-	S4A-8		S4A-10			1/4	✓	Blk	✓	-	26 AWG
D GND	113			1/4	✓	Blk	✓	-	S4A-10		S4A-12			1/4	✓	Blk	✓	-	26 AWG
D GND	114			1/4	✓	Blk	✓	-	S4A-12		S4E-12			1/4	✓	Blk	✓	-	26 AWG
D GND	115			1/4	✓	Blk	✓	-	S4B-12		S4B-11			1/4	✓	Blk	✓	-	26 AWG
D GND	116			1/4	✓	Blk	✓	-	S4B-11		S4B-8			1/4	✓	Blk	✓	-	26 AWG
D GND	117			1/4	✓	Blk	✓	-	S4B-8		S4B-7			1/4	✓	Blk	✓	-	26 AWG
D GND	118			1/4	✓	Blk	✓	-	S4B-7		S4B-4			1/4	✓	Blk	✓	-	26 AWG
D GND	119			1/4	✓	Blk	✓	-	S4B-4		S4B-3			1/4	✓	Blk	✓	-	26 AWG
D GND	120			1/4	✓	Blk	✓	-	S4B-3		S4C-5			1/4	✓	Blk	✓	-	26 AWG
D GND	121			1/4	✓	Blk	✓	-	S4C-5		S4C-6			1/4	✓	Blk	✓	-	26 AWG
D.GND	122			1/4	✓	Blk	✓	-	S4C-6		S4C-7			1/4	✓	Blk	✓	-	26 AWG
D GND	123			1/4	✓	Blk	✓	-	S4C-7		S4C-8			1/4	✓	Blk	✓	-	26 AWG
D GND	124			1/4	✓	Blk	✓	-	S4C-8		S4D-9			1/4	✓	Blk	✓	-	26 AWG
D GND	125			1/4	✓	Blk	✓	-	S4D-9		S4D-10			1/4	✓	Blk	✓	-	26 AWG

DRAWN
DATE
SIZE B
CODE IDENT NO. 20747
SCALE
TITLE
730-24161
SHEET 6
REV A

800-0142A, 1-24-68

FUNCTION NAME/CODE	LINE	FROM								CABLE NO AND LENGTH	TO								REMARKS (See Note)
		JKT STR	WIRE LG	WIRE STR	TIN	CLR	SLV	HDW	LOCATION		LOCATION	JKT STR	WIRE LG	WIRE STR	TIN	CLR	SLV	HDW	
D GND	126			1/4	✓	Blk	✓	-	S4D-10		S4D-11			1/4	✓	Blk	✓	-	26 AWG
D. GND	127			1/4	✓	Blk	✓	-	S4D-11		S4D-12			1/4	✓	Blk	✓	-	26 AWG
	128																		
D GND	129			1/2	✓	Blk	-	-	E 2		S7-X			1/4	✓	Blk	-	-	26 AWG
D. GND	130			-	-	-	✓	-	S7-X		S9-X			-	-	-	✓	-	Buss
D GND	131			-	-	-	✓	-	S9-X		S10-X			-	-	-	✓	-	Buss
D. GND	132			-	-	-	✓	-	S10-X		S11-X			-	-	-	✓	-	Buss
D. GND	133			-	-	-	✓	=	S11-X		S12-X			-	-	-	✓	-	Buss
	134																		
	135																		
D GND	136			1/2	✓	Blk	-	-	E-3		S14-1			1/4	✓	Blk	✓	-	26 AWG
	137																		
D GND	138			1/2	✓	Blk	-	-	E-3		S13A-A2			1/4	✓	Blk	✓	-	26 AWG
D GND	139			1/4	✓	Blk	✓	-	S13A-A2		S13A-A4			1/4	✓	Blk	✓	-	26 AWG
D GND	140			1/4	✓	Blk	✓	-	S13A-A4		S13A-B4			1/4	✓	Blk	✓	-	26 AWG
D GND	141			1/4	✓	Blk	✓	-	S13A-B4		S13A-B3			1/4	✓	Blk	✓	-	26 AWG
D GND	142			1/4	✓	Blk	✓	-	S13A-B3		S13B-A2			1/4	✓	Blk	✓	-	26 AWG
D GND	143			1/4	✓	Blk	✓	-	S13B-A2		S13B-A4			1/4	✓	Blk	✓	-	26 AWG
D GND	144			1/4	✓	Blk	✓	-	S13B-A4		S13B-B4			1/4	✓	Blk	✓	-	26 AWG
D GND	145			1/4	✓	Blk	✓	-	S13B-B4		S13B-B3			1/4	✓	Blk	✓	-	26 AWG
	146																		
D GND	147			1/2	✓	Blk	-	-	E-3		SGA-2			1/4	✓	Blk	✓	-	26 AWG
D. GND	148			1/4	✓	Blk	✓	-	SGA-2		SGB-2			1/4	✓	Blk	✓	-	26 AWG
	149																		
	150																		

DRAWN
DATE

SIZE B
CODE IDENT NO. 20747
SCALE
SHEET 7
REV C

TITLE
730-24161

800-0142A, 1-24-68

FUNCTION NAME/CODE	LINE	FROM								CABLE NO AND LENGTH	TO								REMARKS (See Note)
		JKT STR	WIRE LG	WIRE STR	TIN	CLR	SLV	HDW	LOCATION		LOCATION	JKT STR	WIRE LG	WIRE STR	TIN	CLR	SLV	HDW	
D GND	151			1/2	✓	BLK	-	-	E-2		SSA-2			1/4	✓	BLK	✓	-	26 AWG
D GND	152			1/4	✓	BLK	✓	-	SSA-2		SSA-4			1/4	✓	BLK	✓	-	26 AWG
D GND	153			1/4	✓	BLK	✓	-	SSA-4		SSA-6			1/4	✓	BLK	✓	-	26 AWG
D GND	154			1/4	✓	BLK	✓	-	SSA-6		SSA-8			1/4	✓	BLK	✓	-	26 AWG
D GND	155			1/4	✓	BLK	✓	-	SSA-8		SSA-11			1/4	✓	BLK	✓	-	26 AWG
D GND	156			1/4	✓	BLK	✓	-	SSA-11		SSA-12			1/4	✓	BLK	✓	-	26 AWG
D GND	157			1/4	✓	BLK	✓	-	SSA-12		SSB-11			1/4	✓	BLK	✓	-	26 AWG
D GND	158			1/4	✓	BLK	✓	-	SSB-11		SSB-10			1/4	✓	BLK	✓	-	26 AWG
D GND	159			1/4	✓	BLK	✓	-	SSB-10		SSB-8			1/4	✓	BLK	✓	-	26 AWG
D GND	160			1/4	✓	BLK	✓	-	SSB-8		SSB-7			1/4	✓	BLK	✓	-	26 AWG
D GND	161			1/4	✓	BLK	✓	-	SSB-7		SSB-4			1/4	✓	BLK	✓	-	26 AWG
D GND	162			1/4	✓	BLK	✓	-	SSB-4		SSB-3			1/4	✓	BLK	✓	-	26 AWG
D GND	163			1/4	✓	BLK	✓	-	SSB-3		SSC-5			1/4	✓	BLK	✓	-	26 AWG
D GND	164			1/4	✓	BLK	✓	-	SSC-5		SSC-6			1/4	✓	BLK	✓	-	26 AWG
D GND	165			1/4	✓	BLK	✓	-	SSC-6		SSC-7			1/4	✓	BLK	✓	-	26 AWG
D GND	166			1/4	✓	BLK	✓	-	SSC-7		SSC-8			1/4	✓	BLK	✓	-	26 AWG
D GND	167			1/4	✓	BLK	✓	-	SSC-8		SSD-9			1/4	✓	BLK	✓	-	26 AWG
D GND	168			1/4	✓	BLK	✓	-	SSD-9		SSD-10			1/4	✓	BLK	✓	-	26 AWG
D GND	169			1/4	✓	BLK	✓	-	SSD-10		SSD-11			1/4	✓	BLK	✓	-	26 AWG
D GND	170			1/4	✓	BLK	✓	-	SSD-11		SSD-12			1/4	✓	BLK	✓	-	26 AWG
	171																		
	172																		
	173																		
	174																		
	175																		

DRAWN
DATE

TITLE

SIZE B
SCALE
CODE IDENT NO. 20747
730-24161
SHEET 8
REV A

800-0142A, 1-24-68

FUNCTION NAME/CODE	LINE	FROM								CABLE NO AND LENGTH	TO								REMARKS (See Note)
		JKT STR	WIRE LG	WIRE STR	TIN	CLR	SLV	HDW	LOCATION		LOCATION	JKT STR	WIRE LG	WIRE STR	TIN	CLR	SLV	HDW	
D GND	176			1/2	✓	Blk	–	–	E-3		XDS4-G			1/4	✓	Blk	✓	4	26 AWG
D GND	177			1/4	✓	Blk	✓	4	XDS4-G		XDS4-J			1/4	✓	Blk	✓	4	26 AWG
D GND	178			1/4	✓	Blk	✓	4	XDS4-J		XDS6-J			1/4	✓	Blk	✓	4	26 AWG
D GND	179			1/4	✓	Blk	✓	4	XDS6-J		XDS7-J			1/4	✓	Blk	✓	4	26 AWG
D GND	180			1/4	✓	Blk	✓	4	XDS7-J		XDS8-J			1/4	✓	Blk	✓	4	26 AWG
D GND	181			1/4	✓	Blk	✓	4	XDS8-J		XDS8-K			1/4	✓	Blk	✓	4	26 AWG
D GND	182			1/4	✓	Blk	✓	4	XDS8-K		XDS9-J			1/4	✓	Blk	✓	4	26 AWG
	183																		
D GND	184			1/2	✓	Blk	–	–	E-3		XDS12-J			1/4	✓	Blk	✓	4	26 AWG
D GND	185			1/4	✓	Blk	✓	4	XDS12-J		XDS14-G			1/4	✓	Blk	✓	4	26 AWG
D GND	186			1/4	✓	Blk	✓	4	XDS14-G		XDS14-J			1/4	✓	Blk	✓	4	26 AWG
D GND	187			1/4	✓	Blk	✓	4	XDS14-J		XDS15-H			1/4	✓	Blk	✓	4	26 AWG
D GND	188			1/4	✓	Blk	✓	4	XDS15-H		XDS16-G			1/4	✓	Blk	✓	4	26 AWG
D GND	189			1/4	✓	Blk	✓	4	XDS16-G		XDS16-J			1/4	✓	Blk	✓	4	26 AWG
	190																		
	191																		
	192																		
	193																		
	194																		
	195																		
	196																		
	197																		
	198																		
	199																		
	200																		

DRAWN

DATE

TITLE

SIZE B

CODE IDENT NO. 20747

730-2461

SCALE

SHEET 9

REV G

FUNCTION NAME/CODE	LINE	FROM JKT STR	FROM WIRE LG	FROM WIRE STR	FROM TIN	FROM CLR	FROM SLV	FROM HDW	FROM LOCATION	CABLE NO AND LENGTH	TO LOCATION	TO JKT STR	TO WIRE LG	TO WIRE STR	TO TIN	TO CLR	TO SLV	TO HDW	REMARKS (See Note)
+5V	201			1/2	✓	YEL	–	–	E-4		XDS4-A			1/4	✓	YEL	✓	4	26 AWG
+5V	202			1/4	✓	YEL	✓	4	XDS4-A		XDS5-Com			1/4	✓	YEL	✓	4	26 AWG
+5V	203			1/4	✓	YEL	✓	4	XDS5-Com		XDS6-A			1/4	✓	YEL	✓	4	26 AWG
+5V	204			1/4	✓	YEL	✓	4	XDS6-A		XDS7-A			1/4	✓	YEL	✓	4	26 AWG
+5V	205			1/4	✓	YEL	✓	4	XDS7-A		XDS8-A			1/4	✓	YEL	✓	4	26 AWG
+5V	206			1/4	✓	YEL	✓	4	XDS8-A		XDS9-A			1/4	✓	YEL	✓	4	26 AWG
	207																		
+5V	208			1/2	✓	YEL	–	–	E-4		XDS12-A			1/4	✓	YEL	✓	4	26 AWG
+5V	209			1/4	✓	YEL	✓	4	XDS12-A		XDS13-A			1/4	✓	YEL	✓	4	26 AWG
+5V	210			1/4	✓	YEL	✓	4	XDS13-A		XDS14-A			1/4	✓	YEL	✓	4	26 AWG
+5V	211			1/4	✓	YEL	✓	4	XDS14-A		XDS15-A			1/4	✓	YEL	✓	4	26 AWG
+5V	212			1/4	✓	YEL	✓	4	XDS15-A		XDS16-A			1/4	✓	YEL	✓	4	26 AWG
	213																		
+5V	214			1/2	✓	YEL	–	–	E-4		XDS17-A			1/4	✓	YEL	✓	–	26 AWG
+5V	215			1/4	✓	YEL	✓	–	XDS17-A		XDS24-A			1/4	✓	YEL	✓	–	26 AWG
+5V	216			1/4	✓	YEL	✓	–	XDS24-A		XDS18-A			1/4	✓	YEL	✓	–	26 AWG
+5V	217			1/4	✓	YEL	✓	–	XDS18-A		XDS25-A			1/4	✓	YEL	✓	–	26 AWG
+5V	218			1/4	✓	YEL	✓	–	XDS25-A		XDS19-A			1/4	✓	YEL	✓	–	26 AWG
+5V	219			1/4	✓	YEL	✓	–	XDS19-A		XDS26-A			1/4	✓	YEL	✓	–	26 AWG
+5V	220			1/4	✓	YEL	✓	–	XDS26-A		XDS20-A			1/4	✓	YEL	✓	–	26 AWG
+5V	221			1/4	✓	YEL	✓	–	XDS20-A		XDS27-A			1/4	✓	YEL	✓	–	26 AWG
+5V	222			1/4	✓	YEL	✓	–	XDS27-A		XDS21-A			1/4	✓	YEL	✓	–	26 AWG
+5V	223			1/4	✓	YEL	✓	–	XDS21-A		XDS28-A			1/4	✓	YEL	✓	–	26 AWG
+5V	224			1/4	✓	YEL	✓	–	XDS28-A		XDS22-A			1/4	✓	YEL	✓	–	26 AWG
	225																		

DRAWN

DATE

TITLE

SIZE B

CODE IDENT NO. 20747

730-2461

REV A

SCALE

SHEET 10

BOD-0142A -24-68

FUNCTION NAME/CODE	LINE	FROM								CABLE NO AND LENGTH	TO								REMARKS (See Note)
		JKT STR	WIRE LG	WIRE STR	TIN	CLR	SLV	HDW	LOCATION		LOCATION	JKT STR	WIRE LG	WIRE STR	TIN	CLR	SLV	HDW	
+5V	226			1/2	✓	YEL	—	—	E-4		XDS10-A			1/4	✓	YEL	✓	—	26 AWG
+5V	227			1/4	✓	YEL	✓	—	XDS10-A		XDS11-A			1/4	✓	YEL	✓	—	26 AWG
	228																		
+5V	229			1/2	—	YEL	—	—	E5		XDS3-A			1/4	✓	YEL	✓	—	26 AWG
LOCAL/REMOTE	230			1/4	✓	WHT	✓	—	S3-1		A1A17 P1-A29			5/32	—	WHT	—	2	26 AWG
LOCAL/REMOTE	231			1/4	✓	WHT	✓	—	S3-2		XDS3-B			1/4	✓	WHT	✓	—	26 AWG
LOCAL/REMOTE	232			1/4	✓	WHT	✓	—	XDS3-B		A,A11-22			1/4	✓	WHT	✓	—	26 AWG
LAMP TEST	233			1/4	✓	GRN	✓	—	S15-1 (2)	W5	A1A1B31			5/32	—	GRN	—	2	26 AWG 8 LIB. LINE 270
GND	234			1/4	✓	BLK	✓	—	S15-3		A1A2-1			1/2	✓	BLK	—	—	TW PR
	235																		
S16 METER +	236			1/4	—	GRN	—	S	M1+	W6	A1A1A35			5/32	—	GRN	—	2	26 AWG 8
S16 METER -	237			1/4	—	BLK	—	S	M1-		A1A1B36			5/32	—	BLK	—	2	TW PR
	238																		
DEV METER	239			1/4	—	GRN	—	S	M2-	W7	A1A10-34			5/32	—	GRN	—	3	26 AWG 8
DEV METER	240			1/4	—	BLK	—	S	M2+		A1A10-38			1/2	✓	BLK	—	—	TW PR
	241																		
SYNC LT	242			1/4	✓	GRN	✓	—	XDS23-A	W8	A1A12-40			5/32	—	GRN	—	3	26 AWG 8
SYNC LT	243			1/4	✓	BLK	✓	—	XDS23-B		A1A11-26			5/32	—	BLK	—	3	TW PR LIB. LINE 378
	244																		
PRE FLT LT	245			1/4	✓	GRN	✓	—	XDS17-B	W9 (3) (4)	A1A11-18			5/32	—	GRN	—	3	26 AWG 8 LIB. LINE 372
NORM LT	246			1/4	✓	BLK	✓	—	XDS24-B		A1A10-14			5/32	—	BLK	—	3	TW PR LIB. LINE 363
	247																		
	248																		
	249																		
	250																		

DRAWN
DATE
TITLE
SIZE B
CODE IDENT NO. 20747
SCALE
SHEET 11
730-2461
REV H

FUNCTION NAME/CODE	LINE	FROM								CABLE NO AND LENGTH	TO							REMARKS (See Note)
		JKT STR	WIRE LG	WIRE STR	TIN	CLR	SLV	HDW	LOCATION		LOCATION	JKT STR	WIRE LG	WIRE STR	TIN	CLR	SLV	HDW	
NRZ-LT	251			1/4	✓	Blk	✓	–	XDS22-B	W10	A1A1B15			5/32	–	Blk	–	2	25 COND
L-LT	252			1/4	✓	WHT	✓	–	XDS-2B3		A1A1B17			5/32	–	WHT	–	2	26 AWG
BDF-LT	253			1/4	✓	RED	✓	–	XDS21-3		A1A1B16			5/32	–	RED	–	2	113-205-025
M-LT	254			1/4	✓	GRN	✓	–	XDS27-B		A1A1A29			5/32	–	GRN	–	2	
DM-LT	255			1/4	✓	ORN	✓	–	XDS20-B		A1A1A7			5/32	–	ORN	–	2	
S-LT	256			1/4	✓	Blue	✓	–	XDS26-B		A1A1B19			5/32	–	Blue	–	2	
DBDF-LT	257			1/4	✓	BRN	✓	–	XDS19-B		A1A1B13			5/32	–	BRN	–	2	
AUX-LT	258			1/4	✓	YEL	✓	–	XDS25-B		A1A1A16			5/32	–	YEL	–	2	
RZ-LT	259			1/4	✓	VIO	✓	–	XDS18-B		A1A1A18			5/32	–	VIO	–	2	
LOSS LT	260			1/4	✓	GRY	✓	–	XDS11-B		A1A1B33			5/32	–	GRY	–	2	
OFFSET LT	261			1/4	✓	PINK	✓	–	XDS10-B		A1A1A32			5/32	–	PINK	–	2	
LBW1	262			1/4	✓	TAN	✓	4	XDS14-H		A1A1B22			5/32	–	TAN	–	2	LIB. LINE #231
LBW2	263			1/4	✓	W/BLK	✓	4	XDS14-B		A1A1A21			5/32	–	W/BLK	–	2	LIB. LINE #261
LBW4	264			1/4	✓	W/RED	✓	4	XDS14-C		A1A1B20			5/32	–	W/RED	–	2	LIB. LINE #279
SOURCE 1	265			1/4	✓	W/GRN	✓	4	XDS16-H		A1A1B25			5/32	–	W/GRN	–	2	
SOURCE 2	266			1/4	✓	W/ORN	✓	4	XDS16-B		A1A1B24			5/32	–	W/ORN	–	2	
SOURCE 4	267			1/4	✓	W/BLUE	✓	4	XDS16-C		A1A1B23			5/32	–	W/BLUE	–	2	
	268					W/BRN			—		—					W/BRN			
	269					W/YEL			—		—					W/YEL			
	270					W/VIO			—		—					W/VIO			
	271					W/GRY			—		—					W/GRN			
	272					R/BLK			—		—					R/BLK			
	273					R/GRN			—		—					R/GRN			
	274					R/YEL			—		—					R/YEL			
	275					R/B/W			—		—					R/B/W			

DRAWN
DATE

SIZE B | CODE IDENT NO. 20747 | 730-2461 | REV G

SCALE

SHEET 12

TITLE

W11: 25 COND.
26 AWG
113-205-025

FUNCTION NAME/CODE	LINE	FROM JKT STR	FROM WIRE LG	FROM WIRE STR	FROM TIN	FROM CLR	FROM SLV	FROM HDW	FROM LOCATION	CABLE NO AND LENGTH	TO LOCATION	TO JKT STR	TO WIRE LG	TO WIRE STR	TO TIN	TO CLR	TO SLV	TO HDW	REMARKS (See Note)
RMSD 2	276			1/4	✓	Blk	✓	4	XDS9-B	W11	A.A16-B5			5/32	–	Blk	–	2	LIB. LINE #443 25 COND
RMSD 4	277			1/4	✓	Wh	✓	4	XDS9-C		A.A16-B9			5/32	–	Wh	–	2	LIB. LINE #444 26 AWG
RMSD 3	278			1/4	✓	Red	✓	4	XDS9-G		A.A16-B10			5/32	–	Red	–	2	LIB. LINE #445 113-205-025
RMSD 1	279			1/4	✓	Grn	✓	4	XDS9-H		A.A16-B7			5/32	–	Grn	–	2	LIB. LINE #442
RNMSD 2	280			1/4	✓	Orn	✓	4	XDS8-B		A.A16-A15			5/32	–	Orn	–	2	LIB. LINE #433
RNMSD 4	281			1/4	✓	Blue	✓	4	XDS8-C		A.A16-B16			5/32	–	Blue	–	2	LIB. LINE #447
RNMSD 3	282			1/4	✓	Brn	✓	4	XDS8-G		A.A16 A16			5/32	–	Brn	–	2	LIB. LINE #434
RNMSD 1	283			1/4	✓	YEL	✓	4	XDS8-H		A.A16 B15			5/32	–	YEL	–	2	LIB. LINE #446
RNLSD 2	284			1/4	✓	Vio	✓	4	XDS7-B		A.A16 A19			5/32	–	Vio	–	2	LIB. LINE #437
RNLSD 4	285			1/4	✓	Gry	✓	4	XDS7-C		A.A16 B22			5/32	–	Gry	–	2	LIB. LINE #449
RNLSD 8	286			1/4	✓	Pink	✓	4	XDS7-G		A.A16 B23			5/32	–	Pink	–	2	LIB. LINE #450
RNLSD 1	287			1/4	✓	TAN	✓	4	XDS7-H		A.A16 B21			5/32	–	TAN	–	2	LIB. LINE #445
RLSD 2	288			1/4	✓	W/Blk	✓	4	XDS6-B		A.A16 A17			5/32	–	W/Blk	–	2	LIB. LINE #435
RLSD 4	289			1/4	✓	W/Red	✓	4	XDS6-C		A.A16 A24			5/32	–	W/Red	–	2	LIB. LINE #438
RLSD 3	290			1/4	✓	W/Grn	✓	4	XDS6-G		A.A16 A26			5/32	–	W/Grn	–	2	LIB. LINE #439
RLSD 1	291			1/4	✓	W/Orn	✓	4	XDS6-H		A.A16A18			5/32	–	W/Orn	–	2	LIB. LINE #436
PD-10	292			1/4	✓	W/Blue	✓	–	XDS5-B		A.A16A7			5/32	–	W/Blu	–	2	
PD-X	293			1/4	✓	W/Brn	✓	–	XDS5-C		A.A16 A6			5/32	–	W/Brn	–	2	
RDEC 2	294			1/4	✓	W/YEL	✓	4	XDS4-B		A.A16-A33			5/32	–	W/YEL	–	2	LIB. LINE #440
RDEC 4	295			1/4	✓	W/Vio	✓	4	XDS4-C		A.A16-B34			5/32	–	W/Vio	–	2	LIB. LINE #451
RDEC 1	296			1/4	✓	W/Gry	✓	4	XDS4-H		A.A16-A36			5/32	–	W/Gry	–	2	LIB. LINE #441
AUTO CAL	297			1/4	✓	R/Blk	✓	4	XDS4-K		A.A10-16			5/32	–	R/Blk	–	3	
	298					R/Grn										R/Grn			
	299					R/YEL										R/YEL			
	300					R/Blk										R/Blk			

DRAWN
DATE
TITLE
SIZE B
CODE IDENT NO. 20747
730-24161
REV G
SCALE
SHEET 13

300-01424 -24-66

FUNCTION NAME/CODE	LINE	FROM JKT STR	FROM WIRE LG	FROM WIRE STR	FROM TIN	FROM CLR	FROM SLV	FROM HDW	FROM LOCATION	CABLE NO AND LENGTH	TO LOCATION	TO JKT STR	TO WIRE LG	TO WIRE STR	TO TIN	TO CLR	TO SLV	TO HDW	REMARKS (See Note)
POL +/-	301			1/4	✓	BLK	✓	4	XDS15-C	W12	A A16 830			5/32	–	BLK	–	2	113-205-012 LIB. LINE 376
DERAND DIR LT (--)	302			1/4	✓	WHT	✓	4	XDS13-H	(2)	A1A11-23			5/32	–	WHT	–	3	LIB LINE 407
DERAND DIR LT (¦)	303			1/4	✓	RED	✓	4	XDS13-C	(2)	A1A11-20			5/32	–	RED	–	3	LIB LINE 408
OUT CODE OVR FL. $\overline{\text{SNH}}$	304			1/4	✓	GRN	✓	4	XDS13-F		A1A11-21			5/32	–	GRN	–	2	LIB. LINE 455
OUT CODE B /Σ1	305			1/4	✓	ORN	✓	4	XDS12-B		A A 3832			5/32	–	ORN	–	2	
OUT CODE C /Σ2	306			1/4	✓	BLU	✓	4	XDS12-C		A1A13 831			5/32	–	BLU	–	2	
OUT CODE D /Σ3	307			1/4	✓	BRN	✓	4	XDS12-G		A1A13 830			5/32	–	BRN	–	2	
OUT CODE A /Σ0	308			1/4	✓	YEL	✓	4	XDS12-H		A1A13 833			5/32	–	YEL	–	2	
EXT LT	309			1/4	✓	VIO	✓	4	XDS15-K		A1A11-27			5/32	–	VIO	–	2	LIB. LINE 377
—	310					GRY			—		—					GRY			
—	311					PINK			—		—					PINK			
—	312					TAN			—		—					TAN			
	313																		
LAMP TEST	314			1/4	✓	WHT	✓	–	S15-1 (2)		XDS9-D			1/4	✓	WHT	✓	4	26 AWG
LAMP TEST	315			1/4	✓	WHT	✓	–	XDS9-D		XDS8-D			1/4	✓	WHT	✓	4	26 AWG
LAMP TEST	316			1/4	✓	WHT	✓	–	XDS8-D		XDS7-D			1/4	✓	WHT	✓	4	26 AWG
LAMP TEST	317			1/4	✓	WHT	✓	–	XDS7-D		XDS6-D			1/4	✓	WHT	✓	4	26 AWG
LAMP TEST	318			1/4	✓	WHT	✓	–	XDS6-D		XDS4-D			1/4	✓	WHT	✓	–	26 AWG
LAMP TEST	319			1/4	✓	WHT	✓	–	XDS4-D		XDS12-D			1/4	✓	WHT	✓	–	26 AWG
LAMP TEST	320			1/4	✓	WHT	✓	–	XDS12-D		XDS14-D			1/4	✓	WHT	✓	–	26 AWG
LAMP TEST	321			1/4	✓	WHT	✓	–	XDS14-D		XDS16-D			1/4	✓	WHT	✓	–	26 AWG
	322																		
	323																		
LOOP RESET	324			1/4	✓	WHT	✓	–	S14-3		S14-4			1/4	✓	WHT	✓	–	26 AWG
LOOP RESET	325			1/4	✓	WHT	✓	–	S14-4		A1A1-327			5/32	–	WHT	–	2	26 AWG LIB. LINE 293

DRAWN

DATE

TITLE

SIZE B | CODE IDENT NO. 20747 | 730-2461 | REV E

SCALE

SHEET 14

BOC-01421 -24-68

SEE NOTE 6.

FUNCTION NAME/CODE	LINE	FROM								CABLE NO AND LENGTH	TO								REMARKS (See Note)
		JKT STR	WIRE LG	WIRE STR	TIN	CLR	SLV	HDW	LOCATION		LOCATION	JKT STR	WIRE LG	WIRE STR	TIN	CLR	SLV	HDW	
RNMSD 1	326			1/4	✓	BRN	-	-	S11-1	12 W13	A1A17P2-1			-	-	BRN	-	6	113-261-050
RNMSD 2	327			1/4	✓	RED	-	-	S11-2		A1A17P2-2			-	-	RED	-	6	TERMINATE AT
RNMSD 4	328			1/4	✓	ORN	-	-	S11-4		A1A17P2-3			-	-	ORN	-	6	P2 WITH
RNMSD 3	329			1/4	✓	YEL	-	-	S11-3		A1A17P2-4			-	-	YEL	-	6	109-273-150
RMSD 1	330			1/4	✓	GRN	-	-	S12-1		A1A17P2-5			-	-	GRN	-	6	
RMSD 2	331			1/4	✓	BLUE	-	-	S12-2		A1A17P2-6			-	-	BLUE	-	6	
RMSD 4	332			1/4	✓	VIO	-	-	S12-4		A1A17P2-7			-	-	VIO	-	6	
RMSD 3	333			1/4	✓	GRY	-	-	S12-3		A1A17P2-8			-	-	GRY	-	6	
RLSD 1	334			1/4	✓	WHT	-	-	S9-1		A1A17P2-9			-	-	WHT	-	6	
RLSD 2	335			1/4	✓	BLK	-	-	S9-2		A1A17P2-10			-	-	BLK	-	6	
RLSD 4	336			1/4	✓	BRN	-	-	S9-4		A1A17P2-11			-	-	BRN	-	6	
RLSD 3	337			1/4	✓	RED	-	-	S9-3		A1A17P2-12			-	-	RED	-	6	
RNLSD 1	338			1/4	✓	ORN	-	-	S10-1		A1A17P2-13			-	-	ORN	-	6	
RNLSD2	339			1/4	✓	YEL	-	-	S10-2		A1A17P2-14			-	-	YEL	-	6	
RNLSD4	340			1/4	✓	GRN	-	-	S10-4		A1A17P2-15			-	-	GRN	-	6	
RNLSD8	341			1/4	✓	BLUE	-	-	S10-8		A1A17P2-16			-	-	BLUE	-	6	
POL+/-	342			1/4	✓	VIO	✓	-	S6A-C		A1A17P2-17			-	-	VIO	-	6	
CLK	343			-	-	GRY	-	-	—		A1A17P2-18			-	-	GRY	-	6	
RDEC 1	344			1/4	✓	WHT	-	-	S7-1		A1A17P2-19			-	-	WHT	-	6	
RDEC 2	345			1/4	✓	BLK	-	-	S7-2		A1A17P2 20			-	-	BLK	-	6	
RDEC 4	346			1/4	✓	BRN	-	-	S7-4		A1A17P2-21			-	-	BRN	-	6	
S 1	347			1/4	✓	RED	✓	-	S13B-AC		A1A17P2-22			-	-	RED	-	6	
S 2	348			1/4	✓	ORN	✓	-	S13B-BC		A1A17P2-23			-	-	ORN	-	6	
S 4	349			-	-	YEL	-	-	—		A1A17P2-24			-	-	YEL	-	6	
LB1	350			1/4	✓	GRN	✓	-	S13A-AC		A1A17P2-25			-	-	GRN	-	6	

DRAWN
DATE

SIZE B | CODE IDENT NO 20747 | 730-2461 | REV A

SCALE

SHEET 15

TITLE

FUNCTION NAME/CODE	LINE	FROM								CABLE NO AND LENGTH	TO							REMARKS (See Note)
		JKT STR	WIRE LG	WIRE STR	TIN	CLR	SLV	HDW	LOCATION		LOCATION	JKT STR	WIRE LG	WIRE STR	TIN	CLR	SLV	HDW	
LB2	351			1/4	✓	Blue	✓	-	S13A-BC	1/2	A1A17P2-26			-	-	Blue	-	6	
IN CODE A	352			1/4	✓	[illegible]	✓	-	S5A-C	W/3	A1A17P2-27			-	-	[illegible]	-	6	
IN CODE B	353			1/4	✓	GRN	✓	-	S5B-C		A1A17P2-[illegible]			-	-	[illegible]	-	6	
IN CODE C	354			1/4	✓	WHT	✓	-	S5C-C		A1A17P2-[illegible]			-	-	WHT	-	6	
IN CODE D	355			1/4	✓	BLK	✓	-	S5D-C		A1A17P2-[illegible]			-	-	BLK	-	6	
REMOTE SYNC	356			5/32	-	BRN	-	3	A1A23-19		A1A17P2-31			-	-	BRN	-	6	NOTE 6.
—	357			5/32	-	RED	-	3	A1A23-21		A1A17P2-32			-	-	RED	-	6	NOTE 6.
RANGE ON/OFF	358			-	-	ORN	-	-	—		A1A17P2-33			-	-	ORN	-	6	
DERANGE F/R	359			1/4	✓	YEL	✓	-	S1B-C		A1A17P2-34			-	-	YEL	-	6	
OUT CODE A	360			1/4	✓	GRN	✓	-	S4A-C		A1A17P2-35			-	-	GRN	-	6	
OUT CODE B	361			1/4	✓	Blue	✓	-	S4B-C		A1A17P2-36			-	-	Blue	-	6	
OUT CODE C	362			1/4	✓	VIO	✓	-	S4C-C		A1A17P2-37			-	-	VIO	-	6	
OUT CODE D	363			1/4	✓	GRY	✓	-	S4D-C		A1A17P2-38			-	-	GRY	-	6	
NORM/PREFLT	364			1/4	✓	WHT	✓	-	S6B-C		A1A17P2-39			-	-	WHT	-	6	
DERANGE ON/OFF	365			1/4	✓	BLK	✓	-	S1AC		A1A17P2-40			-	-	BLK	-	6	
—	366			-	-	BRN	-	-	—		A1A17P2-41			-	-	BRN	-	6	
—	367			-	-	RED	-	-	—		A1A17P2-42			-	-	RED	-	6	
—	368			-	-	ORN	-	-	—		A1A17P2-43			-	-	ORN	-	6	
—	369			-	-	YEL	-	-	—		A1A17P2-44			-	-	YEL	-	6	
—	370			-	-	GRN	-	-	—		A1A17P2-45			-	-	GRN	-	6	
—	371			-	-	Blue	-	-	—		A1A17P2-46			-	-	Blue	-	6	
—	372			-	-	VIO	-	-	—		A1A17P2-47			-	-	VIO	-	6	
—	373			-	-	GRY	-	-	—		A1A17P2-48			-	-	GRY	-	6	
ENTER −	374			1/4	✓	WHT	✓	-	S2-1		A1A17P2-49			-	-	WHT	-	6	
ENTER +	375			1/4	✓	BLK	✓	-	S2-2		A1A17P2-50			-	-	BLK	-	6	

DRAWN

DATE

TITLE

SIZE B | CODE IDENT NO. 20747 | 730-2461 | REV G

SCALE

SHEET 16

FUNCTION NAME/CODE	LINE	FROM								CABLE NO AND LENGTH	TO							REMARKS (See Note)
		JKT STR	WIRE LG	WIRE STR	TIN	CLR	SLV	HDW	LOCATION		LOCATION	JKT STR	WIRE LG	WIRE STR	TIN	CLR	SLV	HDW	
INPUT	376			1/2	✓	Grn	✓	-	TP1	W14	A1A3-J7			5/32	-	Grn	-	3	26 AWG TW PR
GND	377			1/2	✓	Blk	✓	-	TP6		A1A3-J5			5/32	-	Blk	-	3	TW 1
	378																		
NRZ-L	379			1/2	✓	Grn	✓	-	TP2	W15	A1A3-J1			5/32	-	Grn	-	2	26 AWG TW PR
—	380					Blk			—		A1A14-1			1/2	✓	Blk	-	-	TW PR
	381																		
B·Φ-L	382			1/2	✓	Grn	✓	-	TP3	W16	A1A3-J3			5/32	-	Grn	-	2	26 AWG TW PR
—	383					Blk			—		A1A14-1			1/2	✓	Blk	-	-	TW PR
	384																		
2°CLK	385			1/2	✓	Grn	✓	-	TP4	W17	A1A3-A14			5/32	-	Grn	-	2	26 AWG TW PR
—	386					Blk			—		A1A14-1			1/2	✓	Blk	-	-	TW PR
	387																		
90°CLK	388			1/2	✓	Grn	✓	-	TP5	W18	A1A3-A13			5/32	-	Grn	-	2	26 AWG TW PR
—	389					Blk			—		A1A14-1			1/2	✓	Blk	-	-	TW PR
	390																		
	391																		
	392																		
	393																		
	394																		
	395																		
	396																		
	397																		
	398																		
	399																		
	400																		

DRAWN
DATE
TITLE
SIZE B
CODE IDENT NO. 20747
SCALE
730-2461
SHEET 17
REV A

FUNCTION NAME/CODE	LINE	FROM								CABLE NO AND LENGTH	TO							REMARKS (See Note)
		JKT STR	WIRE LG	WIRE STR	TIN	CLR	SLV	HDW	LOCATION		LOCATION	JKT STR	WIRE LG	WIRE STR	TIN	CLR	SLV	HDW	
0°CLK	401			1/4	✓	CENT	✓	-	J1-1	W19	A1,A21-20			5/32	-	CENT	-	3	113-301-004
RTN	402			1/4	✓	SHIELD	✓	-	J1-2		A1,A21-21			5/32	-	SHIELD	-	3	
	403																		
90°CLK	404			1/4	✓	CENT	✓	-	J2-1	W20	A1,A21-26			5/32	-	CENT	-	3	113-301-004
RTN	405			1/4	✓	SHIELD	✓	-	J2-2		A1,A21-27			5/32	-	SHIELD	-	3	
	406																		
NRZ-L	407			1/4	-	CENT	✓	-	J3-1	W21	A1,A21-24			5/32	-	CENT	-	3	113-301-004
RTN	408			1/4	✓	SHIELD	✓	-	J3-2		A1,A21-25			5/32	-	SHIELD	-	3	
	409																		
0°CLK	410			1/4	✓	CENT	✓	-	J4-1	W22	A1,A21-22			5/32	-	CENT	-	3	113-301-004
RTN	411			1/4	✓	SHIELD	✓	-	J4-2		A1,A21-23			5/32	-	SHIELD	-	3	
	412																		
90°CLK	413			1/4	✓	CENT	✓	-	J5-1	W23	A1,A21-[illegible]			5/32	-	CENT	-	3	113-301-004
RTN	414			1/4	✓	SHIELD	✓	-	J5-2		A1,A21-21			5/32	-	SHIELD	-	3	
	415																		
180°CLK	416			1/4	✓	CENT	✓	-	J6-1	W24	A1,A21-18			5/32	-	CENT	-	3	113-301-004
RTN	417			1/4	✓	SHIELD	✓	-	J6-2		A1,A21-19			5/32	-	SHIELD	-	3	
	418																		
270°CLK	419			1/4	✓	CENT	✓	-	J7-1	W25	A1,A21-16			5/32	-	CENT	-	3	113-301-004
RTN	420			1/4	✓	SHIELD	✓	-	J7-2		A1,A21-17			5/32	-	SHIELD	-	3	
	421																		
CODED DATA	422			1/4	✓	CENT	✓	-	J8-1	W26	A1,A21-14			5/32	-	CENT	-	3	113-301-004
RTN	423			1/4	✓	SHIELD	✓	-	J8-2		A1,A21-15			5/32	-	SHIELD	-	3	
	424																		
	425																		

DRAWN

DATE

TITLE

SIZE B | CODE IDENT NO. 20747 | 730-2461 | REV B

SCALE

SHEET 18

800-01422

FOR W29 THRU W32
SEE NOTE 6.

FUNCTION NAME/CODE	LINE	FROM JKT STR	FROM WIRE LG	FROM WIRE STR	FROM TIN	FROM CLR	FROM SLV	FROM HDW	FROM LOCATION	CABLE NO AND LENGTH	TO LOCATION	TO JKT STR	TO WIRE LG	TO WIRE STR	TO TIN	TO CLR	TO SLV	TO HDW	REMARKS (See Note)
I CODED DATA	426			1/4	✓	CENT	✓	-	J9-1	W27	A1A23-27			5/32	-	CENT	-	3	113-301-004
RTN	427			1/4	✓	SHIELD	✓	-	J9-2		A1A23-2			5/32	-	SHIELD	-	3	
	428																		
I BIΦ-L	429			1/4	✓	CENT	✓	-	J10-1	W28	A1A23-26			5/32	-	CENT	-	3	113-301-004
RTN	430			1/4	✓	SHIELD	✓	-	J10-2		A1A23-2			5/32	-	[illegible]	-	3	
	431																		
SOURCE 4	432			1/4	✓	CENT	✓	-	J11-1	W29	A1A1-A5			5/32	-	CENT	-	2	113-301-004
RTN	433			1/4	✓	SHIELD	✓	-	J11-2		A1A1-A6			5/32	-	SHIELD	-	2	
	434																		
SOURCE 3	435			1/4	✓	CENT	✓	-	J12-1	W30	A1A1A7			5/32	-	CENT	-	2	113-301-004
RTN	436			1/4	✓	SHIELD	✓	-	J12-2		A1A1A8			5/32	-	SHIELD	-	2	
	437																		
SOURCE 2	438			1/4	✓	CENT	✓	-	J13-1	W31	A1A1B6			5/32	-	CENT	-	2	113-301-004
RTN	439			1/4	✓	SHIELD	✓	-	J13-2		A1A1B7			5/32	-	SHIELD	-	2	
	440																		
SOURCE 1	441			1/4	✓	CENT	✓	-	J14-1	W32	A1A1B9			5/32	-	CENT	-	2	113-301-004
RTN	442			1/4	✓	SHIELD	✓	-	J14-2		A1A1B8			5/32	-	SHIELD	-	2	
	443																		
	444																		
	445																		
	446																		
EXT CLK	447			1/4	✓	CENT	✓	-	J15-1	W33	A1A1-A37			5/32	-	CENT	-	2	113-301-004
RTN	448			1/4	✓	SHIELD	✓	-	J15-2		A1A2-38			5/32	-	SHIELD	-	3	
	449																		
	450																		

J15 NOT YET INSTALLED IN CHASSIS, RUN AND TIE-WRAP W33 FROM A1A1-A37 TO LOCATION OF PLATE NOT YET INSTALLED (ABOVE S31 AND S32) LEAVE ADDITIONAL ½ INCHES OF COAX (113-301-004)

DRAWN		TITLE		
DATE	SIZE B	CODE IDENT NO. 20747	730-2461	REV G
	SCALE			SHEET 119

FUNCTION NAME/CODE	LINE	FROM JKT STR	WIRE LG	WIRE STR	TIN	CLR	SLV	HDW	LOCATION	CABLE NO AND LENGTH	LOCATION	JKT STR	WIRE LG	WIRE STR	TIN	CLR	SLV	HDW	REMARKS (See Note)
EXT	451			1/4	✓	GRN	✓	–	531-1A	W35	A1A1 A33			5/32	-	GRN	–	2	LIQ LINE 2 of 5 2L AWG
50Ω	452			1/4	✓	BLK	✓	–	532-3A		A1A1 B5			5/32	-	BLK	–	2	TW PR
	453																		
	454																		
	455																		
	456																		
	457																		
	458																		
	459																		
	460																		
	461																		
	462																		
	463																		
	464																		
	465																		
	466																		
	467																		
	468																		
	469																		
	470																		
	471																		
	472																		
	473																		
	474																		
	475																		

DRAWN

DATE

TITLE

SIZE B

CODE IDENT NO. 20747

730-2461

REV E

SCALE

SHEET 20 of 20

800-0142A, 1-24-68

REVISIONS

REV.	DESCRIPTION	EFFECTIVE ON S/N	DATE	APPROVED
B	REVISED PER ECO 15763		1/11/83	
C	REVISED PER ECO 15833		2/3/83	
D	REVISED PER ECO 15964		2/3/83	
E	REVISED PER ECO 16006		2/14/83	

(SEE SHEET 1.0 FOR REV)

GENERAL NOTES

1. For additional information see Assembly Drawing 355-0181-501, 502
2. Unless otherwise indicated, all wire is MIL-W-16878, type B, #26 AWG white.
3. Chains must be run in order shown.
4. BUSS BARS

D GND A_1A_2-1 → A_1A_{15}-1 Remove Pins At A_1A_{13} ; A_1A_{14}

D GND A_1A_{21}-1 → A_1A_{24}-1

+5V A_1A_2-3 → A_1A_{15}-3 Remove Pins At A_1A_{13} ; A_1A_{14}

+5V A_1A_{21}-3 → A_1A_{24}-3

A GND A_1A_2-38 → A_1A_{10}-38

+15V A_1A_2-39 → A_1A_{15}-39 Remove Pins At A_1A_{13} ; A_1A_{14}

+15V A_1A_{21}-39 → A_1A_{24}-39

-15V A_1A_2-41 → A_1A_{15}-41 Remove Pins At A_1A_{13} ; A_1A_{14}

-15V A_1A_{21}-41 → A_1A_{24}-41

5. * BLACK CONNECTOR.
   ** TAG WIRES FOR CONNECTION WITH W/L 730-2461.
   *** BUSS BAR.
6. ADD ONE INCH TO EACH JUMPER WIRE LENGTH.

SHEET	41	42	43	44	45	46	47	48	49	50	51	52	53	54	55	56	57	58	59	60
REVISION	—	—	—	—	—	—	—	—	—	—	—	—	—	—	—	—	—	—	—	—
SHEET	21	22	23	24	25	26	27	28	29	30	31	32	33	34	35	36	37	38	39	40
REVISION	M	N	N	N	N	N	N	—	—	—	—	—	—	—	—	—	—	—	—	—
SHEET	1	2	3	4	5	6	7	8	9	10	11	12	13	14	15	16	17	18	19	20
REVISION	N	N	A	A	N	N	L	M	A	M	N	N	A	N	N	N	N	N	A	N

AYDIN COMPUTER AND MONITOR
700 DRESHER ROAD HORSHAM, PA 19044

TITLE LIBRARY WIRE LIST
335A-STD

CODE IDENT 20747
CONTRACT NO.

DRAWN	J. Boutin	10/1/80	ENGINEER			DWG NO. WL 760-0342	REV N
CHECKED			APPROVED				
DRAFTING			MFG	E. Woodward	11/	SIZE A	SHEET 1 OF 27

FORM NO. 1888

REVISIONS

REV	DESCRIPTION	DATE	APPROVED
F	REVISED PER ECO 16178	3/4/88	[signature]
G	REVISED PER ECO 16331	3/29/88	[signature]
H	REVISED PER ECO 16970	9/19/88	[signature]
J	REVISED PER ECO 17148	12/20/88	[signature]
K	REVISED PER ECO 17185	1/13/89	[signature]
L	REVISED PER ECO 17352	5/22/89	[signature]
M	REVISED PER ECO 21018 TN	1-25-91	V. Polsky
N	REVISED IAW ECO 22300 FTB	10-9-91	V. Polsky

AYDIN MONITOR SYSTEMS

500-0637A

CODE IDENT NO.	DWG. NO. WL 760-0342	REV
20747	SHEET 20 OF 27	N

800-0118B

MONITOR SYSTEMS

DRAWN

DATE

TITLE

CODE IDENT NO. 80747

DWG NO. 780-0342

REV N

SHEET 2 OF

LINE	FUNCTION NAME/CODE	WIRE RUN FROM	LG	TO	LG	TO	LG	TO	LG	TO	REMARKS (SEE NOTE)
1	SIG IN	A1A1-D*	4.5	A1A3-35							113-219-002 GRN
2	SIG INRTN	A1A1-C*	4.5	A1A3-38***							BLK
3											
4	EXT-U	A1A1-37*	4.0	A1A2-23							GRN
5	EXT-U	A1A1-R*	4.0	A1A2-24							BLK
6											
7											
8											
9											
10											
11											
12											
13											
14											
15											
16											
17											
18											

800-01188 MONITOR SYSTEMS

DRAWN | DATE | TITLE | CODE IDENT NO. 20747 | DWG NO. 760-0342 | SHEET 3 OF | REV A

LINE	FUNCTION NAME/CODE	WIRE RUN FROM	LG	TO	LG	TO	LG	TO	LG	TO	REMARKS (SEE NOTE)
19	LF-BIT	A1A2-10	5.0	A1A9-15							GRN
20	$\overline{\text{LF-BIT}}$	A1A2-9	5.0	A1A9-13							BLK
21											
22	LF Z	A1A2-14	4.0	A1A7-18							GRN
23	$\overline{\text{LF-Z}}$	A1A2-13	4.0	A1A7-17							BLK
24											
25	LF-RZ	A1A2-15	3.0	A1A3-13							GRN
26	$\overline{\text{LF-RZ}}$	A1A2-16	3.0	A1A3-12							BLK
27											
28	LF-1/2T	A1A2-18	3.0	A1A3-21							GRN
29	$\overline{\text{LF-1/2T}}$	A1A2-17	3.0	A1A3-22							BLB
30											
31	LF-3/4T	A1A2-20	3.0	A1A3-24							GRN
32	$\overline{\text{LF-3/4T}}$	A1A2-19	3.0	A1A3-23							BLK
33											
34	LF/EXT-U	A1A2-22	4.0	A1A7-5							GRN
35	$\overline{\text{LF/EXT-U}}$	A1A2-21	4.0	A1A7-4							BLB
36											

800-0118B

MONITOR SYSTEMS

DRAWN

DATE

TITLE

CODE IDENT NO. 20747

DWG NO. 760-0342

SHEET 4 OF

REV A

W/ BE RUN

LINE	FUNCTION NAME/CODE	FROM	LG	TO	LG	TO	LG	TO	LG	TO	REMARKS (SEE NOTE)
37	LF-BD	A1A2-26	4.0	A1A7-30							GRN
38	$\overline{\text{LF-BD}}$	A1A2-25	4.0	A1A7-31							BLK
39											
40	LF-OFST	A1A2-28	3.0	A1A3-10							GRN
41	$\overline{\text{LF-OFST}}$	A1A2-27	3.0	A1A3-11							BLK
42											
43	LF-NRZ	A1A2-31	3.0	A1A3-8	4.5	A1A8-31					GRN
44	$\overline{\text{LF-NRZ}}$	A1A2-29	3.0	A1A3-7	4.5	A1A8-32					BLK
45											
46	LF INPUT	A1A2-37	3.0	A1A3-31							GRN
47	$\overline{\text{LF-INPUT}}$	A1A2-36	3.0	A1A3-30							BLK
48											
49											
50											
51											
52											
53											
54											

800-0118B MONITOR SYSTEMS

DRAWN | DATE | TITLE | CODE IDENT NO. | DWG NO. 760-0347 | REV N

LINE	FUNCTION NAME/CODE	WIRE RUN FROM	LG	TO	LG	TO	LG	TO	LG	TO	REMARKS (SEE NOTE)
55	HF-INPUT	A1A4-37**	(2) 3.0	A1A3-33							**PIN WITH LINE 79 GREEN
56	$\overline{\text{HF-INPUT}}$	A1A4-36**	(2) 3.0	A1A3-32							** PIN WITH LINE 80 BLACK
57											
58											
59											
60											
61											
62											
63											
64											
65											
66											
67											
68											
69											
70											
71											
72											

800-011 MONITOR SYSTEMS

DRAWN | DATE | TITLE | CODE IDENT NO. 20747 | DWG NO. 760-0347 | SHEET 6 OF | REV Z

LINE	FUNCTION NAME/CODE	WIRE ROUTING FROM	LG	TO	LG	TO	LG	TO	LG	TO	REMARKS (SEE NOTE)
73	HF-NRZ-MF	A1A4-21	3.0	A1A7-22							GRN
74	$\overline{\text{HF-NRZ-MF}}$	A1A4-19	3.0	A1A7-21							BLK
75											
76	HF-SØ MF	A1A4-26	3.0	A1A7-24							GRN
77	$\overline{\text{HF-SØ MF}}$	A1A4-27	3.0	A1A7-23							BLK
78											
79	HF-INPUT LP THRU	A1A4-37 **	(2) 3.0	A1A5-37							GRN. SEE LINE 55
80	$\overline{\text{HF-INPUT LP THRU}}$	A1A4-36 **	(2) 3.0	A1A5-35							BLK SEE LINE 56
81											
82											
83											
84											
85											
86											
87											
88											
89											
90											

800-01185 MONITOR SYSTEMS

DRAWN
DATE
TITLE
CODE IDENT NO. 20747
DWG NO. 760-0342
SHEET 7 OF
REV L

LINE	FUNCTION NAME/CODE	WIRING FROM	LG	TO	LG	TO	LG	TO	LG	TO	REMARKS (SEE NOTE)
91											
92											
93											
94											
95											
96											
97											
98											
99											
100											
101											
102											
103											
104											
105											
106											
107											
108											

800 GROUP — MONITOR SYST

DRAWN | DATE | TITLE | CODE IDENT NO 20747 | DWG NO 760-0342 | SHEET 8 | REV M

LINE	FUNCTION NAME/CODE	WIRE RUN FROM	LG	TO	LG	TO	LG	TO	LG	TO	REMARKS (SEE NOTE)
109	HF-NRZ	A1A7-28	3.0	A1A8-36	3.0	A1A8-34	4.5	A1A6-6			GRN
110	$\overline{\text{HF-NRZ}}$	A1A7-29	3.0	A1A8-37	3.0	A1A8-35	4.5	A1A6-5			BLK
111											
112	HF-RZ	A1A6-8	3.0	A1A7-14							GRN
113	$\overline{\text{HF-RZ}}$	A1A6-7	3.0	A1A7-13							BLK
114											
115	HF-OFST	A1A6-9	3.5	A1A7-36							GRN
116	$\overline{\text{HF-OFST}}$	A1A6-10	3.5	A1A7-37							BLK
117											
118	P-CLK	A1A6-31	5.0	A1A12-14							GRN
119	$\overline{\text{P-CLK}}$	A1A6-30	5.0	A1A12-15							BLK
120											
121	HF 3/4T	A1A6-33	3.0	A1A7-19							GRN
122	$\overline{\text{HF 3/4T}}$	A1A6-32	3.0	A1A7-20							BLK
123											
124	HF-1/2T	A1A6-35	3.0	A1A7-35							GRN
125	$\overline{\text{HF-1/2T}}$	A1A6-34	3.0	A1A7-34							BLK
126											

800-0118B

MONITOR SYSTEMS

DRAWN

DATE

TITLE

LINE	FUNCTION NAME/CODE	WIRE RUN FROM	LG	TO	LG	TO	I.G	TO	LG	TO	REMARKS (SEE NOTE)
127	$\overline{Z}$	A1A7-9	3.0	A1A9-5							GRN
128	$\overline{\overline{Z}}$	A1A7-10	3.0	A1A9-6							BLK
129											
130	u	A1A7-12	4.0	A1A9-35							GRN
131	$\overline{u}$	A1A7-11	4.0	A1A9-36							BLK
132											
133	HF-BIT	A1A7-27	3.0	A1A9-20							GRN
134	$\overline{\text{HF-BIT}}$	A1A7-26	3.0	A1A9-22							BLK
135											
136	BD	A1A7-32	4.0	A1A9-7							GRN
137	$\overline{\text{BD}}$	A1A7-33	4.0	A1A9-9							BLK
138											
139											
140											
141											
142											
143											
144											

CODE IDENT NO. 20747

DWG NO. 760-0342

SHEET 2 OF

REV A

800-0118I

MONITOR SYSTEMS

DRAWN

DATE

TITLE

LINE	FUNCTION NAME/CODE	WIRE RUN FROM	LG	TO	LG	TO	LG	TO	LG	TO	REMARKS (SEE NOTE)
145	DQM	A1A8-21	9.0	A1A22-35							GRN
146	$\overline{\text{DQM}}$	A1A8-20	9.0	A1A22-34							BLK
147											
148	ØN	A1A8-24	3.0	A1A9-25	4.0	A1A12-9					GRN
149	$\overline{\text{ØN}}$	A1A8-25	3.0	A1A9-24	4.0	A1A12-8					BLK
150											
151	LSB	A1A8-26	9.0	A1A22-31							GRN
152	$\overline{\text{LSB}}$	A1A8-27	9.0	A1A22-30							BLK
153											
154	MSB-1 / NMSB	A1A8-28	9.0	A1A22-33							GRN
155	$\overline{\text{MSB-1}}$ / NMSB	A1A8-29	9.0	A1A22-32							BLK
156											
157											
158											
159											
160											
161											
162											

CODE IDENT NO.

DWG NO. 760-0342

REV M

800-0118B MONITOR SYSTEMS

DRAWN | DATE | TITLE

LINE	FUNCTION NAME/CODE	WIRE RUN FROM	LG	TO	LG	TO	LG	TO	LG	TO	REMARKS (SEE NOTE)
163	ZR	A1A9-4	4.5	A1A12-36							GRN
164	$\overline{ZR}$	A1A9-2	4.5	A1A12-35							BLK
165											
166	BD-NRZ	A1A9-12	6.0	A1A13-T*							GRN
167	$\overline{BD-NRZ}$	A1A9-11	6.0	A1A13-36*							BLK
168											
169	SD-BD	A1A9-14	4.0	A1A12-34							GRN
170	$\overline{SD-BD}$	A1A9-19	4.0	A1A12-33							BLK
171											
172	ϕ_8	A1A9-17	4.0	A1A12-10							GRN
173	$\overline{\phi_8}$	A1A9-16	4.0	A1A12-11							BLK
174											
175	SD-CLK	A1A9-21	4.0	A1A12-32							GRN
176	$\overline{SD-CLK}$	A1A9-23	4.0	A1A12-31							BLK
177											
178	HF-IΦ	A1A9-26	3.0	A1A10-18							GRN
179	IΦ GND	A1A9-28**	3.0	A1A10-19							BLK L.L. 182
180											

CODE IDENT NO. 20747 | DWG NO. 760-0342 | SHEET 11 OF | REV N

800-0118E

MONITOR SYSTEMS

DRAWN

DATE

TITLE

CODE IDENT NO. 20747

DWG NO. 760-0342

SHEET 12 OF

REV N

LINE	FUNCTION NAME/CODE	WIRE RUN FROM	LG	T	LG	TO	LG	TO	LG	TO	REMARKS (SEE NOTE)
181	LF-IØ	A1A9-27	4.5	A1A11-10							GRN
182	IØ GND	A1A9-28**	4.5	A1A11-15							BLK L.L. 17
183											
184	LR	A1A9-34	4.0	A1A12-29							GRN
185	$\overline{LR}$	A1A9-29	4.0	A1A12-30							BLK
186											
187											
188											
189											
190											
191											
192											
193											
194											
195											
196											
197											
198											

800-0118B

MONITOR SYSTEMS

DRAWN

DATE

TITLE

CODE IDENT NO. 20747

DWG NO. 760-0342

SHEET 13 OF

REV A

LINE	FUNCTION NAME/CODE	WIRE RUN FROM	LG	TO	LG	TO	LG	TO	LG	TO	REMARKS (SEE NOTE)
199	+VCO ΔI	A1A10-35	5.0	A1A15-40							GRN
200	-VCO ΔI	A1A10-36	5.0	A1A15-37							BLK
201											
202											
203											
204											
205											
206											
207											
208											
209											
210											
211											
212											
213											
214											
215											
216											

800-0118

MONITOR SYSTEM

DRAWN

DATE

TITLE

CODE IDENT NO. 80747

DWG NO. 760-0342

SHEET 14 OF

REV N

LINE	FUNCTION NAME/CODE	FROM	LG	TO		RE RUN TO	LG	TO	LG	TO	REMARKS (SEE NOTE)
217	Φ1	A1A12-7	5.0	A1A13-35*							GRN
218	Φ3	A1A12-6	5.0	A1A13-P*							BLK
219											
220	Φ2	A1A12-13	5.0	A1A13-N*							GRN
221	Φ4	A1A12-12	5.0	A1A13-34*							BLK
222											
223	VCO	A1A12-18	4.0	A1A15-35							GRN
224	$\overline{VCO}$	A1A12-19	4.0	A1A15-36							BLK
225											
226											
227											
228											
229											
230											
231											
232											
233											
234											

800-0118B MONITOR SYSTEMS

DATE | DRAWN | TITLE | CODE IDENT. NO. 80742 | DWG NO. 760-0342 | SHEET 15 OF | REV N

WIRE RU

LINE	FUNCTION NAME/CODE	FROM	LG	TO	LG	TO	LG	TO	LG	TO	REMARKS (SEE NOTE)
Z35	RNRZ-L	A1A13-D*	8.0	A1A22-37							GRN
Z36	$\overline{\text{RNRZ-L}}$	A1A13-4*	8.0	A1A22-36							BLK
Z37											
Z38	CODED DATA	A1A13-24*	8.0	A1A21-12							GRN
Z39	$\overline{\text{CODED DATA}}$	A1A13-b*	8.0	A1A21-11							BLK
Z40											
Z41	NRZ-L	A1A13-25*	8.0	A1A21-35							GRN
Z42	$\overline{\text{NRZ-L}}$	A1A13-c*	8.0	A1A21-34							BLK
Z43											
Z44	90°CLK	A1A13-26*	8.0	A1A21-6	3.0	A1A21-9	3.5	A1A21-33			GRN
Z45	$\overline{\text{90°CLK}}$	A1A13-d*	8.0	A1A21-5	3.0	A1A21-10	3.5	A1A21-32			BLK
Z46											
Z47	0°CLK	A1A13-27*	8.0	A1A21-37	3.5	A1A21-7	3.5	A1A21-31			GRN
Z48	$\overline{\text{0°CLK}}$	A1A13-e*	8.0	A1A21-36	3.5	A1A21-8	3.5	A1A21-30			BLK
Z49											
Z50											
Z51											
Z52											

800-01181 MONIT SYSTEMS

DRAWN | DATE | TITLE | CODE IDENT NO. 20747 | DWG NO. 760-03112 | SHEET 16 OF | REV N

LINE	FUNCTION NAME/CODE	WIRE RUN FROM	LG	TO	LG	TO	LG	TO	LG	TO	REMARKS (SEE NOTE)
253	AUX	A1A1-K*	10.0	A1A13-S*							
254	S·SØ+SØ·M	A1A1-L*	10.0	A1A13-M*							
255	CRZ	A1A1-M*	4.0	A1A2-8	3.0	A1A3-17	4.0	A1A6-12	3.0	A1A7-8	
256			3.5	A1A9-9	4.0	A1A12-16					
257	RZ-L	A1A1-N*	10.0	A1A13-f*							
258	CNRZ	A1A1-P*	4.0	A1A2-7	3.0	A1A3-14	4.0	A1A6-18	3.0	A1A7-16	
259	DM	A1A1-R*	10.0	A1A13-11*							
260	2X CLK	A1A1-S*	11.0	A1A16-R*							
261	LBW 2	BLK A1A1-Y**	8.0	A1A10-7							CH. LINE 263
262	LBI	A1A1-Z*	12.0	A1A17-S*							
263	RESET	A1A17-27*	4.0	A15-4	10.0	A1A1-C*		MAKE 4.0 MAKE 10.0	RUN RUN	26 AWG 26 AWG	BLUE WHT
264	EQ/RESET	A1A15-9	6.0	A1A11-7	4.0	A1A10-9					
265	DEC 4	A1A1-f*	5.0	A1A2-6	3.0	A1A3-26	4.0	A1A6-20	3.0	A1A7-15	
266			3.0	A1A8-33	4.0	A1A11-33	4.0	A1A16-35*			
267	X-LOSS	A1A1-j**	10.0	A1A15-6							
268	EXT	BLK A1A1-m**	5.0	A1A2-12	4.5	A1A7-6	3.5	A1A9-10	4.0	A1A12-17	CH. LINE 951
269											
270	LAMP TEST	A1A16-k*	2.0	A1A16-j*	5.0	A1A11-30	13.0	BLK A1A1-31**			CH. LINE 233

800-0118B MONIT. ...TEMS

LINE	FUNCTION NAME/CODE	WIRE RUN FROM	LG	TO	LG	TO	LG	TO	LG	TO	REMARKS (SEE NOTE)
271	IB2	A1A1-3*	11.5	A1A17-R*							
272	IB1	BLK A1A1-4**	11.5	A1A17-13*							
273	XB4	A1A1-10*	11.5	A1A17-17*							
274	XB3	A1A1-11*	11.5	A1A17-U*							
275	XB2	A1A1-12*	11.5	A1A17-16*							
276	XB1	A1A1-13*	11.5	A1A17-T*							
277	CSΦ	A1A1-14*	4.0	A1A2-5	3.0	A1A3-9	4.0	A1A6-16	3.0	A1A7-7	
278			3.5	A1A9-18	4.0	A1A12-26					
279	LBW 4	BLK A1A1-20**	9.0	A1A9 37	3.5	A1A10-11					CH. LINE #264
280	LB2	A1A1-21*	11.5	A1A17-15*							
281	LBW1	BLK A1A1-22**	9.0	A1A10-8							CH LINE #262
282	EQUAL/RESET	A1A10-17	5.0	A1A15-10							
283	HF-XNG	A1A1-28*	8.0	A1A6-17	8.0	A1A13-a*					
284	LF XNG	A1A1-29*	6.0	A1A3-20	10.0	A1A13-23*					
285	SPILL	A1A1-30*	6.0	A1A3-15	4.0	A1A6-22	8.0	A1A13-L*			
286	LOSS	A1A1-32*	10.0	A1A12-25	7.0	A1A16-4*					
287	OFST-V	A1A1-34*	6.0	A1A3-28							
288	AGC-V	A1A1-35*	6.0	A1A3-27							

DRAWN
DATE
TITLE
CODE IDENT NO. 20747
DWG NO. 760-0342
SHEET 17 OF
REV N

800-0118B MONITOR SYSTEMS

DRAWN | DATE | TITLE | CODE IDENT NO. 20743 | DWG NO. 760-0342 | REV N

LINE	FUNCTION NAME/CODE	WIRE RUN FROM	LG	TO	LG	TO	LG	TO	LG	TO	REMARKS (SEE NOTE)
289	FLT-NRZ	A1A2-11	3.5	A1A4-30	4.0	A1A7-25	4.0	A1A10-15	3.0	A1A11-19	
290			8.0	A1A17-Z*							
291	VDI	A1A2-32	3.0	A1A3-25	3.5	A1A4-5	4.5	A1A6-36	4.0	A1A9-40	
292			3.0	A1A10-37	3.0	A1A11-36	4.5	A1A15-34			
293	DEC2	A1A2-33	3.0	A1A3-19	3.0	A1A4-9	3.5	A1A6-24	4.0	A1A9-33	
294			3.5	A1A10-13	3.0	A1A11-8	3.0	A1A12-4	7.5	A1A16-n*	
295	DEC1	A1A2-34	3.0	A1A3-16	3.0	A1A4-6	3.5	A1A6-23	5.0	A1A10-5	
296			4.5	A1A11-38	4.5	A1A12-5	7.5	A1A16-f*			
297											
298	LOOP RESET	BLK A1A1-27 *#	12.0	A1A17-e*		26 AWG BLUE					CH. LINE #325
299											
300	REMOTE LOOP RESET	A1A1-b*	18.0	A1A23-16							
301											
302											
303											
304											
305											
306											

800-0118B

MONIT. N SYSTEMS

DRAWN

DATE

TITLE

CODE IDENT NO. 20747

DWG NO. 760-0342

SHEET 19 OF

REV A

LINE	FUNCTION NAME/CODE	WIRE RUN FROM	LG	TO	LG	TO	LG	TO	LG	TO	REMARKS (SEE NOTE)
307	HF-OFST-V	A1A3-6	4.0	A1A6-11							
308	S-CLK	A1A3-18	4.0	A1A6-21							
309	HF-AGC-V	A1A3-29	4.0	A1A6-37							
310	POL+/-	A1A3-34	7.0	A1A11-11							
311											
312											
313											
314											
315											
316											
317											
318											
319											
320											
321											
322											
323											
324											

800-0118B MO... R SYSTEMS

DRAWN DATE

TITLE

CODE IDENT NO. 20742

DWG NO. 760-0342

REV N

LINE	FUNCTION NAME/CODE	WIRE RUN FROM	LG	TO	LG	TO	LG	TO	LG	TO	REMARKS (SEE NOTE)
325	MSD 8	A1A4-7	8.0	A1A15-24	4.0	A1A16-L*					
326	MSD 4	A1A4-8	8.0	A1A15-27	4.0	A1A16-J*					
327	-6.2V	A1A4-10	8.0	A1A15-32							
328											
329											
330											
331											
332											
333											
334											
335											
336											
337											
338											
339											
340											
341											
342											

800-0118B MONITOR SYSTEMS

DRAWN

DATE

TITLE

CODE IDENT NO. 20744

DWG NO. 760-03342

REV M

LINE	FUNCTION NAME/CODE	WIRE RUN FROM	LG	TO	LG	TO	LG	TO	LG	TO	REMARKS (SEE NOTE)
343	D4	A,A9-30	4.5	A,A12-22	4.5	A,A15-29					
344	D3	A,A9-31	4.5	A,A12-23	4.5	A,A15-30					
345	DEC4*	A,A9-32	3.0	A,A10-12	3.0	A,A11-9	4.0	A,A11-32	5.0	A,A12-2	
346											
347											
348											
349											
350											
351											
352											
353											
354											
355											
356											
357											
358											
359											
360											

800-0111

MONITOR SYSTEME

DRAWN

DATE

TITLE

CODE IDENT NO.

DWG NO. 740-0342

REV N

LINE	FUNCTION NAME/CODE	WIRE RUN FROM	LG	TO	LG	TO	LG	TO	LG	TO	REMARKS (SEE NOTE)
361	LOOP 2	A1A10-6	3.0	A1A11-6							
362	LOOP 3&4	A1A10-10	3.0	A1A11-5	5.0	A1A15-33					
363	$\overline{\text{NORM LT}}$	A1A10-14**	3.0	A1A11-25							CH LINE 246
364											
365	+5.5V REF	A1A10-32	3.0	A1A11-14							
366	LF AV	A1A10-40	3.0	A1A11-37							
367											
368											
369	A GND	A1A10-38***	5.0	A1A11-40	5.0	A1A15-38					22 AWG BLK
370											
371	$\overline{\text{POL +/-}}$	A1A11-12	3.0	A1A11-13	7.0	A1A16-F*	4.0	A1A17-M*			
372	$\overline{\text{PRE-FLT LT}}$	A1A11-18**	3.0	A1A11-24							CH LINE 245
373											
374	$\overline{\text{EQUAL LT}}$ / $\overline{\text{LAMP TEST}}$	A1A16-32*	7.0	A1A10-16**							CH. LINE 297
375											
376	$\overline{\text{POL +/-}}$ / $\overline{\text{LAMP TEST}}$	A1A16-33*	2.0	A1A16-30** BLK							CH LINE 301
377	$\overline{\text{EXT LT}}$	A1A1-k*	10.0	A1A11-27**							CH. LINE 309
378	$\overline{\text{SYNC LT}}$	A1A12-37	4.0	A1A11-26**							CH LINE 243

800-0118B MONITOR SYSTEMS

DRAWN | DATE | TITLE | CODE IDENT NO. 20747 | DWG NO. 76-03442 | SHEET 23 OF | REV N

LINE	FUNCTION NAME/CODE	WIRE RUN FROM	LG	TO	LG	TO	LG	TO	LG	TO	REMARKS (SEE NOTE)
379	D2	A1A12-20	4.5	A1A15-31							
380	D1	A1A12-21	4.5	A1A15-28							
381	ACL-CLK	A1A12-24	5.0	A1A15-5							
382	$\overline{\text{SYNC}}$	A1A12-28	4.5	A1A13-10*	5.0	A1A15-7	4.0	A1A16-6*	7.0	A1A23-18	
383											
384	$\overline{\text{LOSS}}$	A1A1-N*	15.0	A1A23-20							
385											
386											
387											
388											
389											
390											
391											
392											
393											
394											
395											
396											

800-0118B

M[illegible]JR SYSTEMS

DRAWN

DATE

TITLE

CODE IDENT NO. 20707

DWG NO. 760-0342

REV N

LINE	FUNCTION NAME/CODE	WIRE RUN FROM	LG	TO	LG	TO	LG	TO	LG	TO	REMARKS (SEE NOTE)
397	F/R DERAND DIR	A_1A_{13}-E*	5.0	A_1A_{17}-19*							
398	B Φ-L OUT	A_1A_{13}-K*	9.0	A_1A_{23}-4							
399	OUTPUT R4B4	A_1A_{13}-N*	5.0	A_1A_{17}-Y*							
400	OUTPUT R4B2	A_1A_{13}-P*	5.0	A_1A_{17}-X*							
401	RAND ON/$\overline{\text{OFF}}$	A_1A_{13}-m*	5.0	A_1A_{17}-W*							
402	DERAND ON/$\overline{\text{OFF}}$	A_1A_{13}-[illegible]*	5.0	A_1A_{17}-22*							
403	OUTPUT R4B5	A_1A_{13}-12*	5.0	A_1A_{17}-21*							
404	OUTPUT R4B3	A_1A_{13}-13*	5.0	A_1A_{17}-20*							
405	CODED DATA OUT	A_1A_{13}-28*	9.0	A_1A_{23}-5							
406											
407	DERAND $\overline{\text{ON}}$/$\overline{\text{OFF}}$ LT	A_1A_{13}-6*	5.0	A_1A_{11}-23**							CH LINE 302
408	DERAND F/R LT.	A_1A_{13}-5*	5.0	A_1A_{11}-20**							CH. LINE 303
409											
410	RNRZ-L	A_1A_{13}-F*	10.0	A1A24-4							
411											
412											
413											
414											

800-0118B

MONITOR SYSTEMS

DRAWN

DATE

TITLE

CODE IDENT NO. 20747

DWG NO. 760-0342

SHEET 25 OF

REV N

LINE	FUNCTION NAME/CODE	WIRE RUN FROM	LG	TO	LG	TO	LG	TO	LG	TO	REMARKS (SEE NOTE)
415	1KHZ REF	A1A15-2	5.0	A1A16-L*							
416	$\overline{EQ}$	A1A15-8	5.0	A1A16-14*							
417	A=B	A1A15-11	5.0	A1A16-K*							
418	LSD8	A1A15-12	5.0	A1A16-C*							
419	LSD2	A1A15-13	5.0	A1A16-18*							
420	LSD1	A1A15-14	5.0	A1A16-19*							
421	LSD4	A1A15-15	5.0	A1A16-a*							
422	NLSD8	A1A15-16	5.0	A1A16-Z*							
423	NLSD1	A1A15-17	5.0	A1A16-X*							
424	NLSD2	A1A15-18	5.0	A1A16-20*							
425	NLSD4	A1A15-19	5.0	A1A16-Y*							
426	NMSD8	A1A15-20	5.0	A1A16-11*							
427	NMSD1	A1A15-21	5.0	A1A16-P*							
428	NMSD2	A1A15-22	5.0	A1A16-13*							
429	NMSD4	A1A15-23	5.0	A1A16-12*							
430	MSD2	A1A15-25	5.0	A1A16-M*							
431	MSD1	A1A15-26	5.0	A1A16-N*							
432											

800-0[illegible] MONITOR [illegible]END

DRAWN

DATE

TITLE

CODE IDENT NO. 20742

DWG NO. 760-0342

REV N

LINE	FUNCTION NAME/CODE	WIRE RUN FROM	LG	TO	LG	TO	LG	TO	LG	TO	REMARKS (SEE NOTE)
433	RNMSD 2	BLK ** A1A16-S	6.5	A1A17-3*							CH. LINE #280
434	RNMSD 8	BLK ** A1A16-T	6.5	A1A17-4*							CH. LINE #282
435	RLSD 2	BLK ** A1A16-U	6.5	A1A17-7*							CH. LINE #288
436	RLSD 1	BLK ** A1A16-V	6.5	A1A17-H*							CH. LINE #291
437	RNLSD 2	BLK ** A1A16-W	6.5	A1A17-9*							CH. LINE #284
438	RLSD 4	BLK ** A1A16-b	6.5	A1A17-J*							CH. LINE #289
439	RLSD 8	BLK ** A1A16-d	6.5	A1A17-8*							CH. LINE #290
440	RDEC 2	BLK ** A1A16-m	6.5	A1A17-12*							CH. LINE #294
441	RDEC 1	BLK ** A1A16-r	6.5	A1A17-N*							CH. LINE #296
442	RMSD 1	BLK ** A1A16-7	6.5	A1A17-E*							CH LINE #279
443	RMSD2	BLK ** A1A16-8	6.5	A1A17-5*							CH. LINE #276
444	RMSD4	BLK ** A1A16-9	6.5	A1A17-F*							CH. LINE #277
445	RMSD 8	BLK ** A1A16-10	6.5	A1A17-6*							CH. LINE #278
446	RNMSD 1	BLK ** A1A16-15	6.5	A1A17-C*							CH. LINE #283
447	RNMSD 4	BLK ** A1A16-16	6.5	A1A17-D*							CH. LINE #281
448	RNLSD 1	BLK ** A1A16-21	6.5	A1A17-K*							CH. LINE #287
449	RNLSD 4	BLK ** A1A16-22	6.5	A1A17-L*							CH. LINE #285
450	RNLSD 8	BLK ** A1A16-23	6.5	A1A17-10*							CH. LINE #286

800-0118B M OR SYSTEMS

DRAWN

DATE

TITLE

CODE IDENT NO. 20747

DWG NO. 760-0342

SHEET 27 OF 27

RE N

LINE	FUNCTION NAME/CODE	WIRE RUN FROM	LG	TO	LG	TO	LG	TO	LG	TO	REMARKS (SEE NOTE)
451	RDEC 4	BLK ** A1A16-34	5.5	A1A17-P*							CH. LINE #295
452	RDEC 8	A1A16-36*	5.5	A1A15-1***							
453											
454	OUT CODE OUT FL/CN+4	A1A13-h*	15.0	A1A11-21**							LINE #304
455											
456											
457											
458											
459											
460											
461											
462											
463											
464											
465											
466											
467											
468											